HyPort P30
HyPort P60
HyPort P90 Series

Medical Supply Unit

Operator's Manual

© Copyright 2023-2024 Nanjing Mindray Bio-Medical Electronics Co., Ltd. All rights reserved.

Release time: 2024-10.

Revision: 5.0

Intellectual Property Statement

NANJING MINDRAY BIO-MEDICAL ELECTRONICS CO., LTD. (hereinafter called Mindray) owns the intellectual property rights to this product and this manual. This manual may refer to information protected by copyrights or patents and does not convey any license under the patent rights of Mindray nor the rights of others.

Mindray intends to maintain the contents of this manual as confidential information. Disclosure of the information in this manual in any manner whatsoever without the written permission of Mindray is strictly forbidden.

Release, amendment, reproduction, distribution, rental, adaptation, translation of this manual in any manner whatsoever without the written permission of Mindray is strictly forbidden.

mindray, MINDRAY, MINDRAY, are the registered trademarks or trademarks owned by Mindray in China and other countries. All other trademarks that appear in this manual are used only for editorial purposes without the intention of improperly using them. They are the property of their respective owners.

Responsibility on the Manufacturer Party

Contents of this manual are subject to changes without prior notice.

All information contained in this manual is believed to be correct. Mindray shall not be liable for errors contained herein nor for incidental or consequential damages in connection with the furnishing, performance, or use of this manual.

Mindray is responsible for the effects on safety, reliability and performance of this product, only if:

- all installation operations, expansions, changes, modifications and repairs of this product are conducted by Mindray authorized personnel;
- the electrical installation of the relevant room complies with the applicable national and local requirements;
- the product is used in accordance with the instructions for use.

WARNING

- **This equipment must be operated by skilled/trained clinical professionals.**
- **It is important for the hospital or organization that employs this equipment to carry out a reasonable service/maintenance plan. Neglect of this may result in machine breakdown or personal injury.**

Warranty

THIS WARRANTY IS EXCLUSIVE AND IS IN LIEU OF ALL OTHER WARRANTIES, EXPRESSED OR IMPLIED, INCLUDING WARRANTIES OF MERCHANTABILITY OR FITNESS FOR ANY PARTICULAR PURPOSE.

Exemptions

Mindray's obligation or liability under this warranty does not include any transportation or other charges or liability for direct, indirect or consequential damages or delay resulting from the improper use or application of the product or the use of parts or accessories not approved by Mindray or repairs by people other than Mindray authorized personnel.

This warranty shall not extend to

- Malfunction or damage caused by improper use or man-made failure.
- Malfunction or damage caused by unstable or out-of-range power input.
- Malfunction or damage caused by force majeure such as fire and earthquake.
- Malfunction or damage caused by improper operation or repair by unqualified or unauthorized service people.
- Malfunction of the instrument or part whose serial number is not legible enough.
- Others not caused by instrument or part itself.

Notification of Adverse Events

As a health care provider, you may report the occurrence of certain events to NANJING MINDRAY BIO-MEDICAL ELECTRONICS CO., LTD., and possibly to the competent authority of the member state in which the user and / or patient is established.

These events include device-related death and serious injury or illness. In addition, as part of our Quality Assurance Program, NANJING MINDRAY BIO-MEDICAL ELECTRONICS CO., LTD. requests to be notified of device failures or malfunctions. This information is required to ensure that NANJING MINDRAY BIO-MEDICAL ELECTRONICS CO., LTD. provides only the highest quality products.

Company Contact

Manufacturer:	Nanjing Mindray Bio-Medical Electronics Co., Ltd.
Address:	666# Middle Zhengfang Road, Jiangning, 211111 Nanjing, Jiangsu, P.R.China
Website:	www.mindray.com
E-mail Address:	service@mindray.com
Tel:	+86 755 81888998
Fax:	+86 755 26582680

EC-Representative:	Shanghai International Holding Corp. GmbH (Europe)
Address:	Eiffestrasse 80, 20537 Hamburg, Germany
Tel:	0049-40-2513175
Fax:	0049-40-255726

Preface

Manual Purpose

This manual contains the instructions necessary to operate the product safely and in accordance with its function and intended use. Observance of this manual is a prerequisite for proper product performance and correct operation and ensures patient and operator safety.

This manual is based on the maximum configuration and therefore some contents may not apply to your product. If you have any question, please contact us.

This manual is an integral part of the product. It should always be kept close to the equipment so that it can be obtained conveniently when needed.

Intended Audience

This manual is geared for clinical professionals who are expected to perform daily operations of the product, maintain and troubleshoot the product and learn how to use the product.

Illustrations

All illustrations in this manual serve as examples only. They may not necessarily reflect the setup or data displayed on your equipment.

Conventions

- ***Italic text*** is used in this manual to quote the referenced chapters or sections.
- ***Bold text*** is used to indicate the screen texts.
- → is used to indicate operational procedures.

This page intentionally left blank.

Contents

1 Safety ..... 1 - 1

1.1 Safety Information ..... 1 - 1

1.1.1 Warning ..... 1 - 1

1.1.2 Caution ..... 1 - 4

1.1.3 Note ..... 1 - 5

1.2 Equipment Symbols ..... 1 - 6

1.2.1 Symbols on the Control Panel and Corded Hand Control ..... 1 - 8

1.3 Warning Label ..... 1 - 8

1.3.1 Current ..... 1 - 8

1.3.2 Voltage ..... 1 - 8

2 Equipment Introduction ..... 2 - 1

2.1 Intended Use ..... 2 - 1

2.1.1 Intended Purpose ..... 2 - 1

2.1.2 Intended Users ..... 2 - 1

2.1.3 Intended Patient Population ..... 2 - 1

2.1.4 Intended Medical Conditions ..... 2 - 1

2.1.5 Contra-indications ..... 2 - 1

2.1.6 Side-effects ..... 2 - 1

2.2 Main Components ..... 2 - 2

2.2.1 Distribution Module ..... 2 - 5

3 Daily Operations ..... 3 - 1

3.1 Preparations ..... 3 - 1

3.2 Positioning the Medical Supply Unit ..... 3 - 1

3.3 Rotation Range ..... 3 - 3

3.4 Raising and Lowering the Pendant ..... 3 - 4

3.4.1 Using Up/Down Control Buttons ..... 3 - 5

3.5 Using the Pneumatic/Electromagnetic Brake (optional) ..... 3 - 6

3.5.1 Using the Release-all Control Button ..... 3 - 6

3.6 Using Service Components ..... 3 - 7

3.6.1 Using Gas Outlets ..... 3 - 7

3.6.2 Using Electrical Outlets ..... 3 - 8

3.7 Power Switch ..... 3 - 10

3.8 Turning On/Off the Indirect Navigation Light ..... 3 - 11

3.9 Using Data Outlets ..... 3 - 11

3.10 Oxygen Concentration Monitoring ..... 3 - 12

4 Accessories ..... 4 - 1

4.1 Shelf ..... 4 - 1

4.1.1 Rail-mount Shelf ..... 4 - 1
4.1.2 Pole-mount Shelf ..... 4 - 3
4.1.3 Folding Shelf ..... 4 - 4
4.1.4 Anti-slide Mat (optional) ..... 4 - 4
4.2 Wire Basket ..... 4 - 6
4.2.1 Wire Basket (common) ..... 4 - 6
4.2.2 Foot Switch Wire Basket ..... 4 - 6
4.3 Manager Box ..... 4 - 7
4.3.1 Rail-mount Manager Box ..... 4 - 7
4.3.2 Manager Box for Sputum Suction Cannula ..... 4 - 7
4.3.3 Manager Box for Respiratory Hag ..... 4 - 8
4.4 Cable Management System ..... 4 - 8
4.4.1 Rail-mount Cable Manager ..... 4 - 8
4.4.2 Leadwire Manager ..... 4 - 8
4.4.3 Power Cable Manager for Medical Device ..... 4 - 9
4.4.4 Power Cable Manager for Infusion and Syringe Pump ..... 4 - 10
4.4.5 Hose Hook ..... 4 - 10
4.4.6 Chamber Cable Manager ..... 4 - 11
4.5 Extension Arm ..... 4 - 11
4.5.1 Front Extension Arm ..... 4 - 11
4.5.2 Double Extension Arms ..... 4 - 12
4.5.3 Extension Arm for Feeding Pump ..... 4 - 14
4.6 Endoscopy Camera Holder ..... 4 - 15
4.7 Fastening to Fix an Anesthesia Machine on Pendant ..... 4 - 15
4.8 Rail System ..... 4 - 16
4.9 Probe Extension ..... 4 - 17

5 Cleaning and Disinfection ..... 5 - 1
5.1 Safety Information ..... 5 - 1
5.2 Cleaning ..... 5 - 3
5.2.1 Preparation before Cleaning ..... 5 - 3
5.2.2 Cleaning Procedure ..... 5 - 3
5.3 Disinfection ..... 5 - 3
5.3.1 Recommended Disinfectants ..... 5 - 3
5.3.2 Disinfection ..... 5 - 5

6 Maintenance ..... 6 - 1
6.1 Maintenance Safety Information ..... 6 - 1
6.2 Maintenance Schedule ..... 6 - 2
6.3 Disposal ..... 6 - 4

7 Troubleshooting ..... 7 - 1
7.1 Common Error ..... 7 - 1

A Product Specifications ..... A - 1

A.1 Safety Specifications ..... A - 1

A.1.1 Product Classification ..... A - 1

A.1.2 Environmental Specifications ..... A - 1

A.2 Power Supply Specifications ..... A - 2

A.2.1 Power Supply ..... A - 2

A.2.2 Fuse ..... A - 2

A.3 Installation and Use ..... A - 2

A.3.1 Electrical Facilities ..... A - 2

A.3.2 Gas Facilities ..... A - 2

A.3.3 Other Requirements ..... A - 2

A.4 Performance Characteristics ..... A - 3

A.4.1 HyPort P30 ..... A - 3

A.4.2 HyPort P60 ..... A - 4

A.4.3 HyPort P90 ..... A - 4

A.4.4 Maximum Load of the Unit ..... A - 5

A.4.5 Useful Load ..... A - 5

A.4.6 Weight of Accessories ..... A - 6

A.4.7 Gas Characteristics ..... A - 7

A.4.8 Standards ..... A - 7

B Accessories and Parts List ..... B - 1

C Electronic Interface ..... C - 1

D EMC ..... D - 1

This page intentionally left blank.

1 Safety

1.1 Safety Information

WARNING

- **Indicates a potential hazard or unsafe practice that, if not avoided, could result in death or serious injury.**

CAUTION

- **Indicates a potential hazard or unsafe practice that, if not avoided, could result in minor personal injury or product/property damage.**

NOTE

- **Provides application tips or other useful information to ensure that you get the most from your product.**

1.1.1 Warning

WARNING

- **The equipment is to be used for its intended purposes only. Do not use it for other purposes.**
- **The equipment is to be installed by personnel authorized by Mindray only.**
- **The equipment is to be operated by trained personnel only.**
- **Before using the equipment, be sure to read and fully understand this manual.**
- **Keep this manual in the vicinity of the equipment so that it can be obtained conveniently when needed.**
- **To avoid the risk of electric shock, the equipment must only be connected to a mains supply with protective earth.**
- **Route, wrap and secure the cables to avoid inadvertent disconnection, stumbling and entanglement.**

- **Do not use such devices as cell phones, radio equipment and MR equipment around the equipment.**
- **To avoid explosion hazard, do not use the equipment in the presence of oxygen-rich atmospheres, flammable anesthetics, or other flammable agents.**
- **Use and store the equipment within the specified temperature, humidity, and atmospheric pressure.**
- **Before putting the equipment into operation, the user must verify that the equipment, connecting cables and accessories are in correct working order and operating condition.**
- **Do not touch the patient and live parts simultaneously. Otherwise, patient injury may occur.**
- **Devices connected to the equipment must meet the requirements of the applicable IEC standards (e.g. IEC 62368-1 safety standards for audio/video, information and communication technology equipment and IEC 60601-1 safety standards for medical electrical equipment). The system configuration must meet the requirements of the IEC 60601-1 medical electrical systems standard. Any personnel who connect devices to the equipment's signal input/output port are responsible for providing evidence that the safety certification of the devices has been performed in accordance to the IEC 60601-1. If you have any questions, please contact Mindray.**
- **Be sure to operate the equipment as instructed in this manual. Warranty does not cover damage caused by non-compliance.**
- **Device service or maintenance should be completed by the authorized personnel only. Warranty does not cover damage caused by unapproved service or maintenance.**
- **Be sure to only use accessories made by Mindray. Accessories produced by other manufacturers must not be used as they may cause personal injury. If accessories of other manufacturers must be used, their use should be expressly permitted by Mindray.**
- **Before using accessories, be sure to read the operator's manual thoroughly.**
- **Do not open the equipment housings.**
- **No modification of this device is allowed.**
- **Do not use agents containing alcohol where high-frequency equipment is being used. Neglect of this may cause fire hazard.**
- **There may be a risk of infection if the the equipment is under the complicated and changeable medical conditions. Follow the hospital requirements and refer to "Cleaning and Disinfection" chapter to clean/disinfect the the equipment.**

- **At the end of its service life, the equipment, as well as its accessories, must be disposed of in compliance with the local regulations. If you have any questions concerning disposal of the equipment, please contact Mindray.**
- **For disposal of parts and accessories, unless otherwise specified, follow local regulations regarding disposal of hospital waste.**
- **Dispose of the package material as per the applicable waste control regulations. Keep it out of children's reach.**
- **Make sure the electrical installation of building complies with the requirements of IEC 60364-7-710.**
- **Be aware that the unit is always turned on. Do not operate it carelessly. All electrical circuits are always live. Be aware that outlets mounted on the shelf and service column are energized.**
- **When moving the unit, be aware that your view of the floor and the area you are moving to may be obscured by the unit or by equipment mounted on it. Carelessness when moving the unit can result in personal injury and/or device damage.**
- **For maximum control, use both hands when moving the unit. Failure to fully control the unit can result in personal injury.**
- **Keep fingers, hands and foreign objects such as cords or cables out of the way when adjusting the shelves or securing equipment on the unit.**
- **It is recommended that the equipment on the unit be secured with cords or other fastenings in case of equipment falling off and causing personal injury or property damage.**
- **An accumulation of flammable materials within the unit can create a hazardous environment. Use a lint free cloth to clean the unit.**
- **Do not collide with the distribution module. Otherwise, device damage is possible.**
- **The leaked oxygen burns easily. When using oxygen outlets or nitrous oxide outlets, be sure to avoid fire and do not smoke.**
- **Keep grease and flammable liquid away from the oxygen and nitrous oxide outlets.**
- **Be sure there is no presence of a flammable anesthetic mixture with air or with oxygen or nitrous oxide in AGSS outlet.**
- **Do not overload any weight-bearing part of the unit.**
- **The distribution modules can bear a maximum of 120kg load and a maximum of 300kg load. Do not overload them.**
- **The display holder can bear a maximum of 120kg load. Do not overload it.**
- **Before connecting any equipment to the medical supply unit, make sure the equipment is suitable for use within the patient environment. If you have any question, contact the customer department authorized by Nanjing Mindray**

or your local distributor. Do not connect any unrecognized equipment to the unit.

- **If any non-medical electrical equipment is connected to the unit within the patient environment and may be contacted by the operator during routine maintenance or calibration, etc., make sure it operates at a voltage not exceeding 25V a.c or 60 V d.c, or it is powered by a source that is separated from the mains supply by appropriate insulation.**
- **Before connecting any equipment to the unit, make sure its accompanying documents or the equivalent documents are complete and read them thoroughly before making any connection.**
- **Before connecting any equipment to the unit, make sure the environmental conditions within the room is suitable for the equipment.**
- **Equipment in which protection against electrical shock relies on basic insulation only shall not be connected to the unit.**
- **Do not simultaneously touch the patient and the enclosure of the medical device operating at a voltage exceeding 25 V a.c or 60 V d.c.**
- **Do not install the unit in the vicinity of such strong magnetic or electromagnetic fields as the Nuclear Magnetic Resonance (NMR), Magnetic Resonance Imaging (MRI) and the like.**

1.1.2 Caution

CAUTION

- **Exercise caution when transporting or moving the equipment. Do not damage it during transportation or movement.**
- **Always install or carry the equipment or accessories properly to avoid damage caused by drop, impact, strong vibration or other mechanical force.**
- **Check the screws for components and parts regularly to prevent them falling off.**
- **Be sure to use spare parts supplied by Mindray only.**
- **Make sure the unit is regularly serviced or maintained by the authorized personnel only.**
- **The portable or mobile RF communication device can affect operation of medical devices. Make sure that the equipment is installed in a proper environment.**
- **Do not force the unit when the swivel arm or distribution module reaches its utmost position.**
- **Do not overload any electrical outlet.**
- **The maximum current of the unit is 16A. Do not overload it.**

- **Do not plug a gas probe or an electrical connector into an outlet of a different standard.**
- **If necessary, the force of the mechanical brake is to be adjusted by authorized personnel only.**
- **Use a slow, steady motion to move the unit. Fast jerky movements can cause devices to fall off the shelves.**
- **Pay attention to the position of the vertical lifting mechanism before raising or lowering the unit. Do not hit other subassemblies or devices.**
- **Contact the customer service department authorized by Nanjing Mindray or your local distributor before installing a new anesthesia cart to the unit. Improper installation can damage the unit and void the warranty.**
- **Do not use steam, extremely hot water (over 70°C/158°F), or high pressure water guns to clean the unit. These cleaning techniques can damage the equipment or lead to electrical malfunctions.**

1.1.3 Note

NOTE

- **Contents of this manual are based on the full configuration of the medical supply unit. Some of them may not apply to your unit. Use your medical supply unit according to the actual configuration. If you have any questions, contact the customer service department authorized by Mindray or your local distributor.**
- **Training materials are available. Be sure to contact Nanjing Mindray or your local distributor for them.**
- **The software was developed in compliance with IEC 62304. The possibility of hazards arising from software errors is minimized.**
- **The equipment software copyright is solely owned by Mindray. No organization or individual shall resort to modifying, copying, or exchanging it or to any other infringement on it in any form or by any means without due permission.**
- **Batteries are recommended to be replaced regularly. The battery must only be replaced by personnel authorized by Nanjing Mindray.**

1.2 Equipment Symbols

Some symbols may not appear on your equipment.

Symbol	Description	Symbol	Description
(Blue)	Refer to instruction manual/booklet		Caution
	Protective earth (ground)		Equipotentiality
	Alternating current	IP20	Protected against solid foreign objects of 12,5 mm Ø and greater
	Load capacity		Type B applied part
SN	Serial number		Anti-static
EC REP	Authorized representative in the European Community	MD	Medical Device
	Date of manufacture		Manufacturer
	This way up		Keep dry
	Fragile, handle with care	n	Stacking limit by number

Symbol	Description	Symbol	Description
	Do not roll		Temperature limit
	Humidity limitation		Atmospheric pressure limitation
	Recyclable		Separate collection for electrical and electronic equipment
	Computer network	UDI	Unique Device Identification
CE 0123	This product is provided with a CE marking in accordance with the regulations stated in Regulation(EU) 2017/745. The number adjacent to the CE marking (0123) is the number of the EU-notified body certified for meeting the requirements of the Regulation.		Video input/output
	ON (power)		OFF (power)

1.2.1 Symbols on the Control Panel and Corded Hand Control

Symbol	Description	Symbol	Description
	Up		Down
	Indirect navigation light		Release-all
	Mute key of oxygen concentration monitoring		Sound indicator of oxygen concentration monitoring

NOTE

- **If the unit is not configured with the corresponding function, the related control buttons do not work.**

1.3 Warning Label

1.3.1 Current

The label near the electrical socket indicates the unit can bear a maximum of 16A current. Do not overload it.

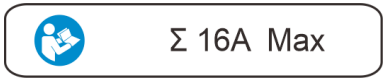

1.3.2 Voltage

The label near the electrical socket indicates the unit can bear a range of voltage from 220V to 240V or from 100V to 127V. Do not overload it.

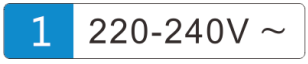

2 Equipment Introduction

2.1 Intended Use

2.1.1 Intended Purpose

The device is designed as a permanently mounted unit, which provides location for equipment used in diagnostics, therapy and surgery, access to such media as electricity, medical gases, vacuum, data and communications.

2.1.2 Intended Users

The unit is operated by trained doctors, nurses, care workers and authorized personnel of device service and maintenance.

2.1.3 Intended Patient Population

The unit is applicable for adults, children and newborns.

2.1.4 Intended Medical Conditions

It is used in intensive care unit, anaesthesia room, operating room, recovery and emergency rooms.

2.1.5 Contra-indications

None.

2.1.6 Side-effects

According to the conclusion of clinical evaluation and residual risk evaluation, for the intended patients, there are no known side effects that can occur during or after the use of the medical device. And there is no need for the operator to make extra preparations. Thus, no residual risk associated with using the medical device should be disclosed.

WARNING

- **Contents of this manual are based on the full configuration of the medical supply unit. Some of them may not apply to your unit. Use your medical supply unit according to the actual configuration. If you have any questions, contact the customer service department authorized by Mindray or your local distributor.**

2.2 Main Components

The main components of the HyPort medical supply unit are shown in the figures below.

■ HyPort P30 mechanical ceiling supply pendant

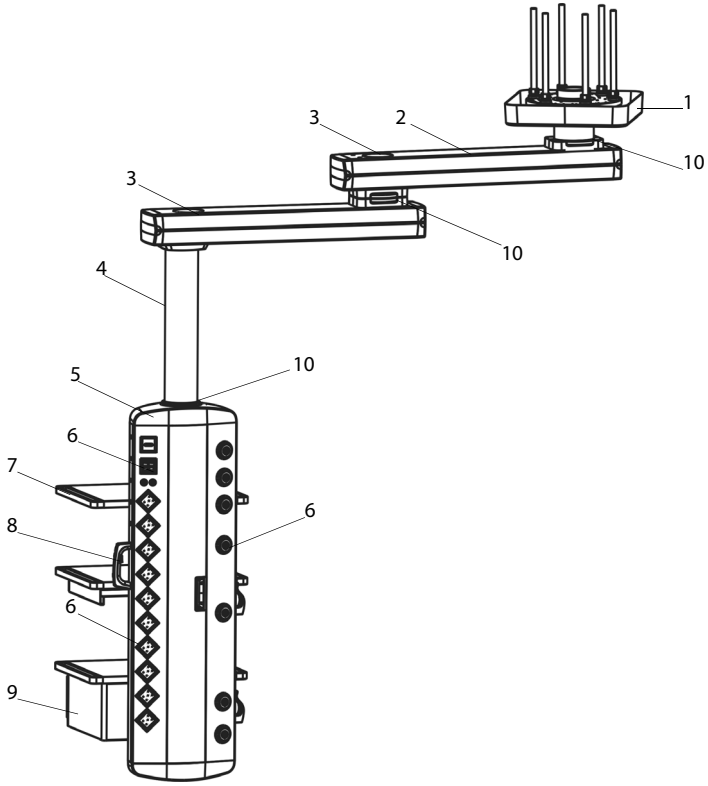

1. Ceiling cover
2. Swivel arm
3. Indirect navigation light (optional)
4. Suspension tube
5. Distribution module
6. Service components (electrics and gases)
7. Shelf
8. Control handle (optional)
9. Drawer
10. Articulations

■ HyPort P60 power ceiling supply pendant with a motorized arm

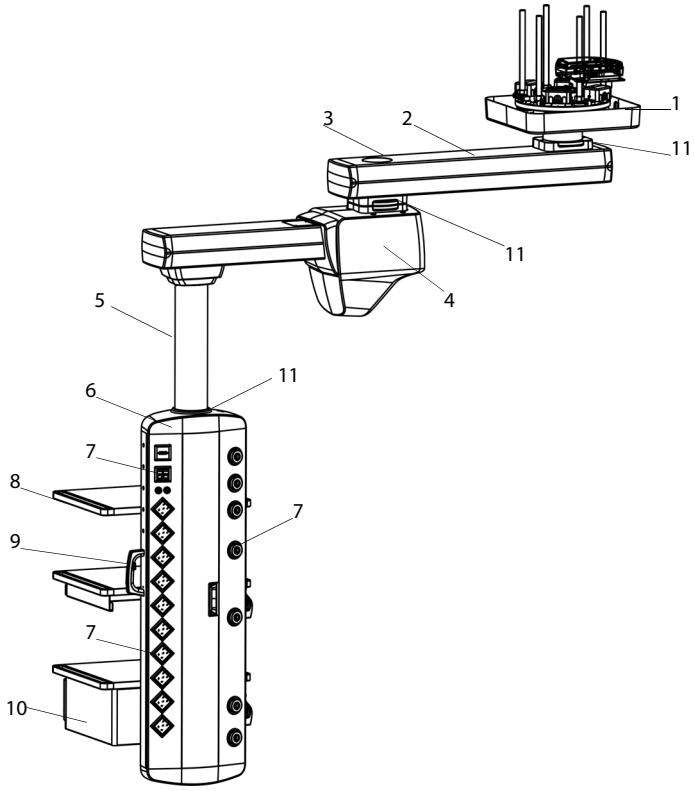

1. Ceiling cover
2. Swivel arm
3. Indirect navigation light (optional)
4. Motor cabinet
5. Suspension tube
6. Distribution module
7. Service components (electrics and gases)
8. Shelf
9. Control handle
10. Drawer
11. Articulations

■ HyPort P90 power ceiling supply pendant with a vertical lifting mechanism

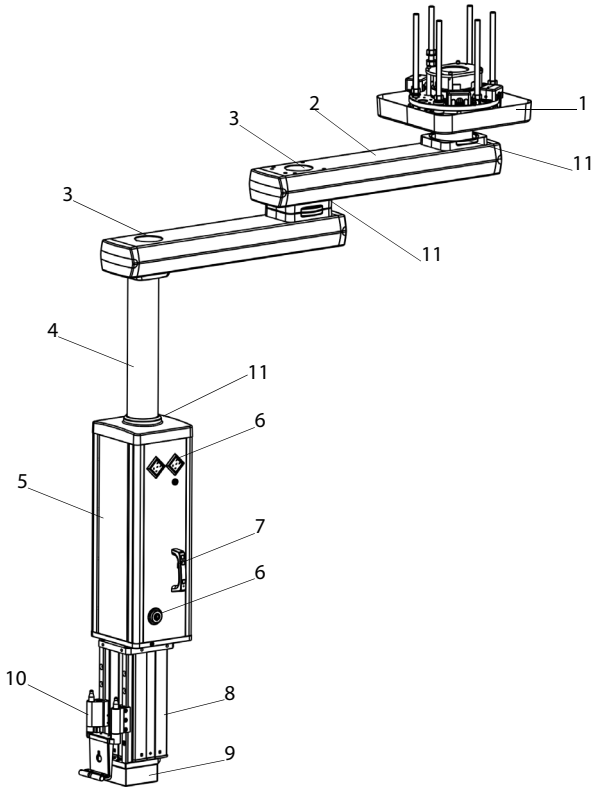

1. Ceiling cover
2. Swivel arm
3. Indirect navigation light (optional)
4. Suspension tube
5. Distribution module
6. Service components (electrics and gases)
7. Control handle
8. Vertical lifting mechanism
9. Driver module
10. Fastening to fix an anesthesia machine or MIS cart on pendant
11. Articulations

2.2.1 Distribution Module

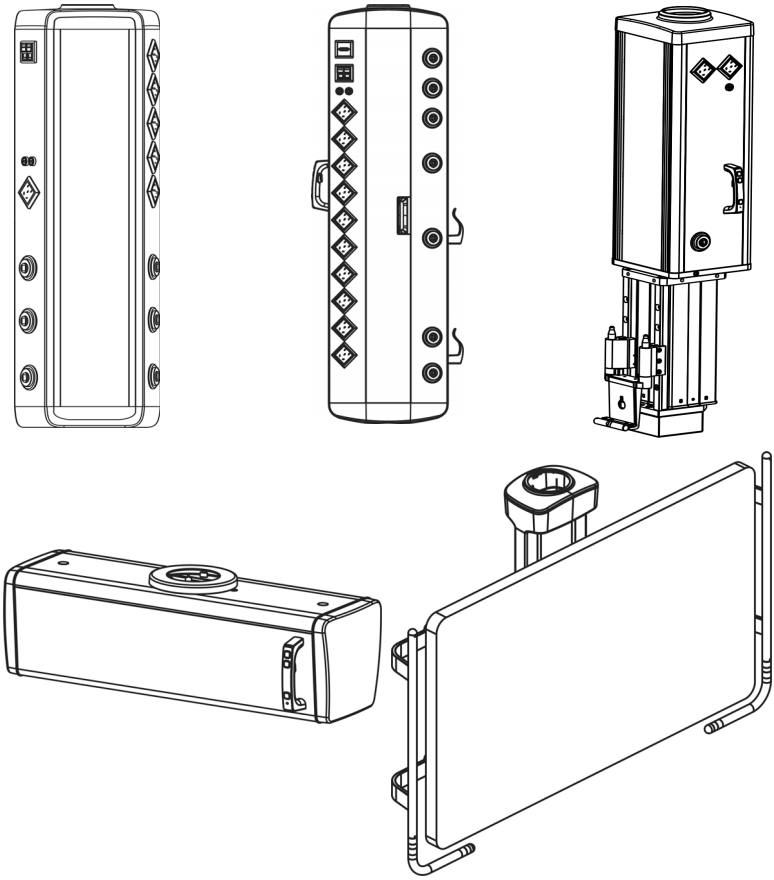

This page intentionally left blank.

3 Daily Operations

3.1 Preparations

Each time before using the medical supply unit, check and make sure:

- there is no physical damage on the unit.
- the swivel arm can rotate freely.
- the swivel arm does not drift.
- the indoor power supply is normal.
- no gas leakage.
- gas identity is correct.

WARNING

- **Do not start using the medical supply unit until all the above-mentioned pre-use checks are done and you are sure the results of all the checks are fine.**

NOTE

- **After unpacking the medical supply unit, be sure to take good care of the packing materials, in case you need to return it for any reason.**

3.2 Positioning the Medical Supply Unit

WARNING

- **Exercise caution when you position the unit. Do not hurt any person or damage any device.**
- **When moving the unit, be aware that your view of the floor and the area you are moving to may be obscured by the unit or by the devices mounted on it. Carelessness when moving the unit can result in personal injury or device damage.**
- **Do not collide with the distribution module. Otherwise, personnel injury or device damage is possible.**
- **Be aware that the unit is always turned on. Do not operate it carelessly.**

- **For maximum control, use both hands when moving the unit. Failure to fully control the unit can result in personal injury.**

CAUTION

- **Do not force the unit when the arm or distribution module reaches its utmost position.**
- **Use a slow, steady motion to move the unit. Fast jerky movements can cause devices to fall off the shelves.**

Each arm or distribution module can rotate around an articulation. You can rotate and extend the unit by:

1. the two sides of the distribution module, or
2. the control handle on the distribution module, or
3. the side rails of the shelf, or
4. the anti-collision side rails of the display holder.

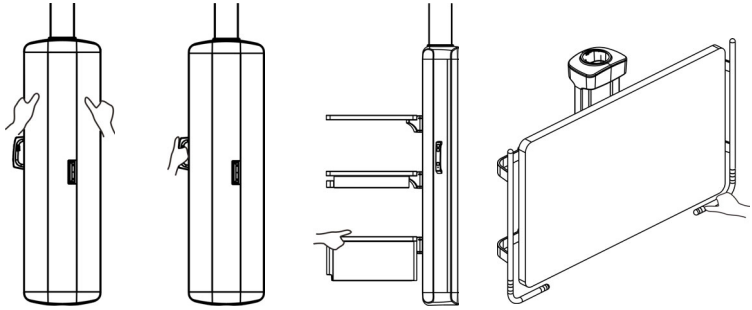

CAUTION

- **Use both hands when moving the unit. Use one hand to hold the control handle and the other to hold the side rail of the shelf.You can rotate and extend the unit as the figure below shows.**

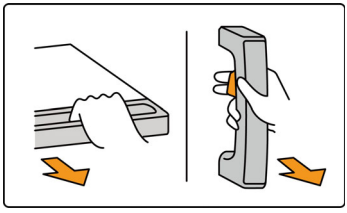

3.3 Rotation Range

The articulation rotation range is 340°.

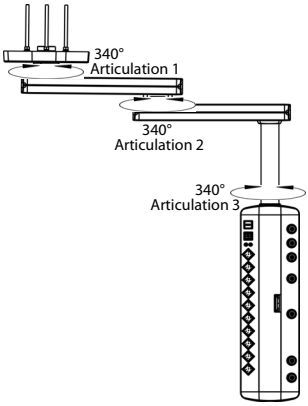

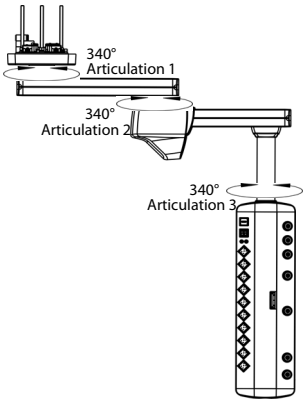

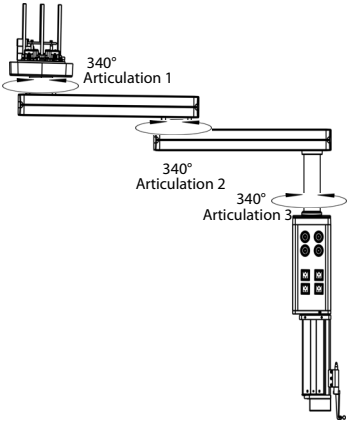

NOTE

- **The arm and distribution can rotate a maximum of 340°. Actual movement will be adjusted during installation to limit the unit as necessary to prevent collisions with walls or other structural elements.**

3.4 Raising and Lowering the Pendant

WARNING

- **Exercise caution when you position the unit. Do not hurt any person or damage any device.**
- **Be aware that the medical supply unit is always turned on. Do not push any buttons without consulting with the person in charge of the operating room or the operations.**
- **When moving the unit, be aware that your view of the floor and the area you are moving to may be obscured by the unit or by devices mounted on it. Carelessness when moving the unit can result in personal injury or device damage.**
- **For maximum control, use both hands when moving the unit. Failure to fully control the unit can result in injury to yourself or others.**
- **Do not collide with the distribution module. Otherwise, personnel injury or device damage is possible.**
- **Do not place anything or any part of your body below the unit when lowering it.**
- **When the buttons are out of order, stop operating the unit and contact the customer service department authorized by Nanjing Mindray or your local distributor.**

CAUTION

- **To protect the motor, do not operate the vertical lifting mechanism continuously over 3 minutes. If you have been operating the vertical lifting mechanism continuously for 3 minutes, wait for 15 minutes before using it again.**
- **To protect the motor, do not operate the motorized arm continuously over 2 minutes. If you have been operating the motorized arm continuously for 2 minutes, wait for 18 minutes before using it again.**
- **Pay attention to the position of the vertical lifting mechanism before raising or lowering the unit. Do not hit other subassemblies or devices.**
- **Check the cables and hoses attached to the unit before raising or lowering the unit.**
- **To move the vertical lifting mechanism up and down, be sure to press and hold the up/down key until the mechanism has reached the desired position.**
- **Do not lift the unit when the motorized arm rotates below the swivel arm. Otherwise the motorized arm may collide with the first swivel arm.**

- **Use a slow, steady motion to move the unit. Fast jerky movements can cause devices to fall off the shelves.**
- **If necessary, the force of the mechanical brake is to be adjusted by authorized personnel only.**
- **The brake engages automatically. Be sure to press and hold the brake release button(s) while moving the unit.**
- **Do not release the unit while it is in motion. The brake will engage automatically and bring the unit to an immediate stop. This can cause improperly secured devices to fall off, hence resulting in personal injury and/ or device damage.**
- **Do not collide with the distribution module. Otherwise, personnel injury or device damage is possible.**

3.4.1 Using Up/Down Control Buttons

Use up/down control buttons to move the distribution module up and down.

■ Up/down control buttons on the control handle

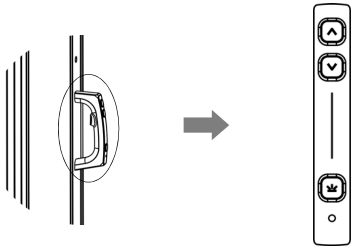

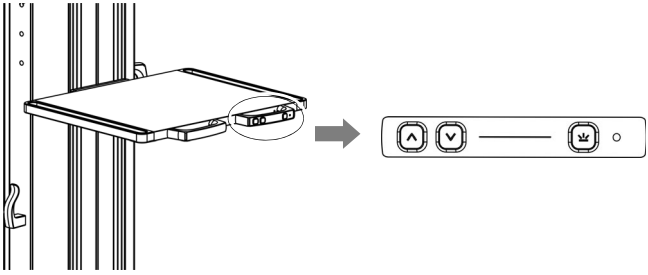

■ Up/down control buttons on the corded hand control

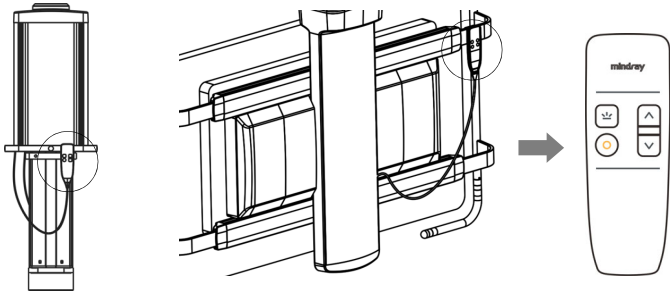

You can:

■ Press button ∧ to move the mechanism up.

■ Press button ∨ to move the mechanism down.

3.5 Using the Pneumatic/Electromagnetic Brake (optional)

The swivel arm or distribution module can be equipped with a pneumatic braking system that operates on compressed air and an electromagnetic braking system that operates on solenoid.

3.5.1 Using the Release-all Control Button

The release-all control button can unlock all articulations at one time.

■ Release-all control button on the control handle

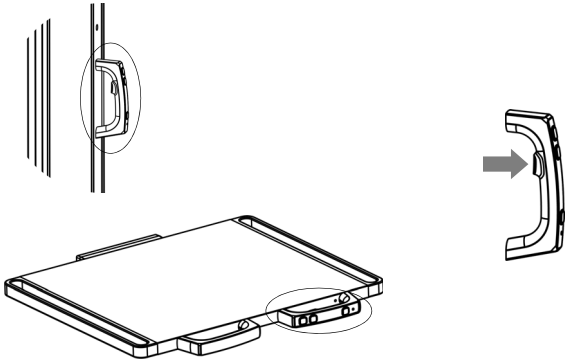

■ Release-all control button on the corded hand control

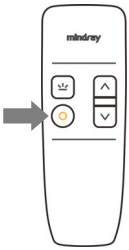

You can:

1. Press and hold the release-all control button.
2. Rotate and extend the unit to the desired position.
3. Release the button.

3.6 Using Service Components

The service components include medical gases, vacuum, electricity, and communications (telephone, nurse call, and network).

3.6.1 Using Gas Outlets

WARNING

- **The leaked oxygen burns easily. When using oxygen or nitrous oxide outlets, be sure to avoid fire and do not smoke.**
- **Keep grease and flammable liquid away from the oxygen and nitrous oxide outlets.**
- **Before the initial operation, make sure the gas hoses are correctly connected, gas flows are normal and no leakages are present.**

CAUTION

- **Do not plug a gas probe into an outlet of a different standard.**
- **When disconnecting a gas probe, be sure to hold it to avoid unexpected ejection.**

NOTE

- **Installation of flow meters and/or pressure gauges in compliance with your local requirements is recommended.**
- **For the detail of the gas outlets, please refer to specific manufacturer's instructions.**

The following gas and vacuum are available for the medical supply units.

- Oxygen (O_2)
- Nitrous Oxide (N_2O)
- Carbon Dioxide (CO_2)
- Compressed air (Air)
- Vacuum
- Anesthesia gas scavenging system (AGSS)

Connect the medical gas lines as instructed below.

1. Identify the appropriate gas outlets which are clearly labeled with the gas type. Ensure that the probe matches the gas type.
2. Screw or plug the appropriate fitting to the gas outlet.

3.6.2 Using Electrical Outlets

WARNING

- **The purpose of the equipotential pin is to eliminate the potential difference between electrical devices. Make sure it is connected to an equipotential point within the operating room, ICU or laboratory before using the medical supply unit.**

CAUTION

- **Do not overload any electrical outlet.**
- **The maximum current of the unit is 16A. Do not overload it.**
- **Do not plug an electrical connector into an outlet of a different standard.**
- **Be sure to know the electrical demands of the devices you intend to connect to the outlets, and do not exceed the circuit rating.**
- **Do not connect any multiple portable socket-outlet or power extension cord to the unit.**

- **Do not connect more devices than the circuit can supply in amperage. Overloading an electrical circuit can lead to overheating and fire. It can also result in a circuit failure and a loss of power to the devices it supplies.**
- **An electrical surgical unit (ESU) may create noise on the power lines. This noise may interfere with other devices on the same line. To minimize the potential for interference, ensure that each ESU unit is connected to a different circuit.**
- **If such communication outlets as the network outlet, the telephone outlet and the like are used, make sure screened IT cable in compliance with the requirements of EN 50288 are used, and the overall wiring are in compliance with the requirements of EN 50174-2.**

NOTE

- **Plug an electrical connector fully into the electrical socket to make sure the medical device is normally powered.**
- **Plug an electrical connector into another effective electrical socket if circuit malfunction occurs.**
- **When pulling an electrical connector out of the electrical socket, be sure to hold the outlet to avoid unexpected damage.**
- **For the detail of the electrical outlets, please refer to specific manufacturer's instructions.**

■ Electrical outlet (common)

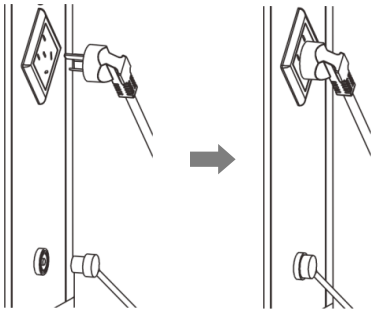

■ Electrical outlet with waterproof cover

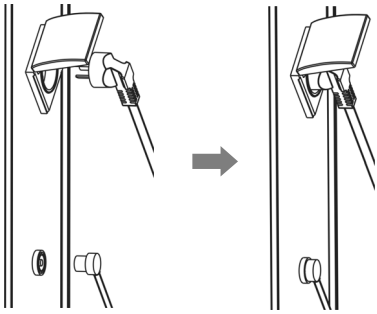

Each electrical outlet has a maximum capacity, which varies from 10Amps to 20 Amps, depending on the outlet you have chosen. Follow these best practice guidelines for connecting electrical devices to electrical outlets.

1. If power cords are detached from the devices, ensure that you are connecting the correct cord with the proper wire gauge.
2. Attach separate power cords to the devices first, and then plug the power cords into the electrical outlets.
3. Always plug the power cord into the nearest electrical outlet with adequate circuit capacity.
4. Do not allow the excess power cord to dangle. Coil the excess cord and secure it with wire ties or tape.
5. Connect the equipotential cable to the equipotential pin on the unit and then connect the other end of the cable to the operating room's equipotential pin.
6. If your device has an equipotential pin, be sure to connect it to the equipotential pin on the unit.

3.7 Power Switch

Use the power switch to control the connection and disconnection of the internal electrical socket so that you do not need to plug or unplug the power plug frequently.

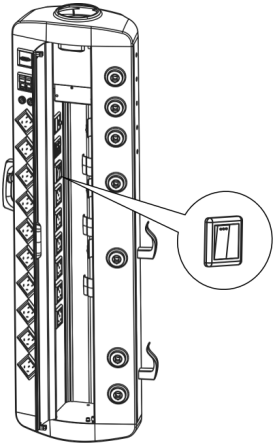

NOTE

- **The label " | " on the power switch indicates the unit is power on and label " ◯ " indicates the unit is power off.**

3.8 Turning On/Off the Indirect Navigation Light

The light switch of the indirect navigation light is on the control handle and the corded hand control.

Press to turn on/off the indirect navigation light.

3.9 Using Data Outlets

The following data outlets are available: RJ11/RJ45 (with/without shield), BNC, HDMI, VGA, S-VIDEO, DVI-D.

3.10 Oxygen Concentration Monitoring

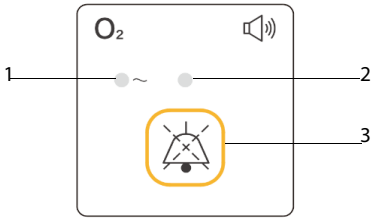

1. AC indicator
2. Indicator of high oxygen concentration
3. Mute key of oxygen concentration monitoring

■ State definitions of oxygen concentration monitoring

State	Definition
AC indicator is green.	The oxygen concentration monitoring is AC powered.
Indicator of high oxygen concentration is orange and flashing.	The oxygen concentration value is not within a normal range.
Sound is heard.	The oxygen concentration value is not within a normal range.

CAUTION

- **The function is only for monitoring the oxygen concentration inside the distribution module.**
- **When the oxygen concentration value is not within a normal range, contact the customer service department authorized by Nanjing Mindray.**
- **The sound can be silenced by the mute key, but the indicator of high oxygen concentration is still orange and flashing.**

4 Accessories

WARNING

- **Be sure to only use accessories made by Nanjing Mindray on the medical supply unit. Accessories produced by other manufacturers must not be used for they may cause personal injury. If accessories of other manufacturers must be used unless their use is expressly permitted by Nanjing Mindray.**
- **Do not overload any weight-bearing part of the unit.**

NOTE

- **If you want to know more details of the accessories, contact the customer service department authorized by Nanjing Mindray or your local distributor.**

4.1 Shelf

The shelf provides location for medical devices.

- Side rails of the shelf can be used to mount the wire basket and the cable manager.
- The shelf can be equipped with the drawer, the extension plate and the keyboard tray.
- The height of the shelf can be adjusted as required.

4.1.1 Rail-mount Shelf

- Rail-mount shelf

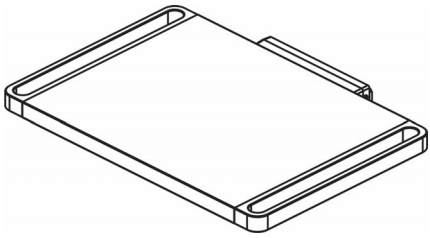

■ Rail-mount shelf with drawer

The drawer provides separate boards to manage items more conveniently. To open the drawer, push the drawer inward before opening it.

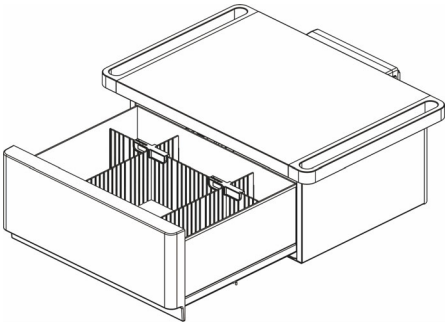

The drawer allows you to place the cables in the drawer without frequently plugging/ unplugging the cables. Cable crossing space can prevent the drawer from pinching the device cables.

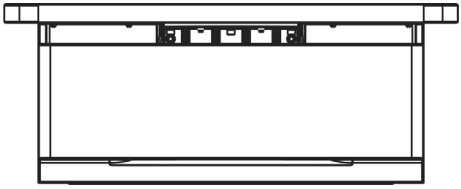

■ Rail-mount shelf with extension plate

Rail-mount shelf with extension plate can be used for placing large medical devices.

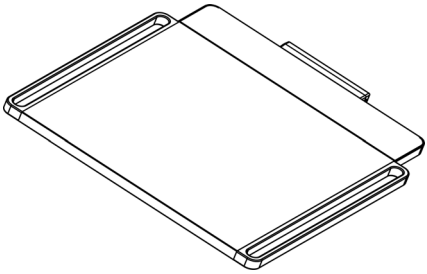

- Rail-mount shelf with keyboard tray

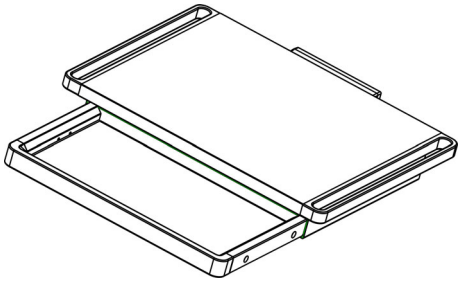

- Rail-mount shelf with control handle

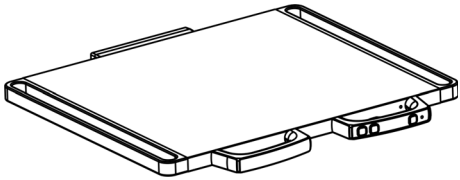

4.1.2 Pole-mount Shelf

- Pole-mount shelf

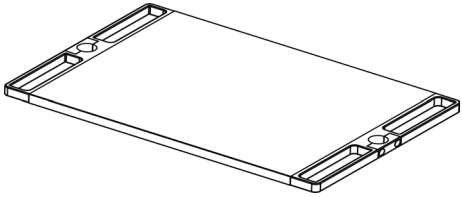

- Pole-mount shelf with drawer

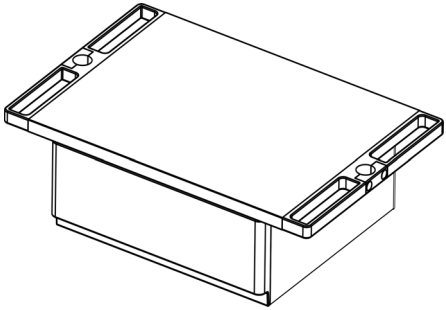

4.1.3 Folding Shelf

Fold the shelf upwards to save space when the medical device is not in service.

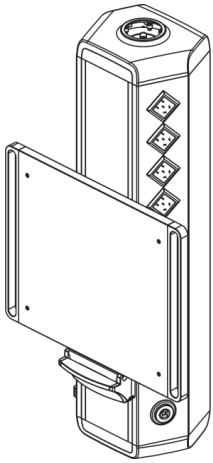

4.1.4 Anti-slide Mat (optional)

Anti-slide mat is used to reduce the slipping of devices.

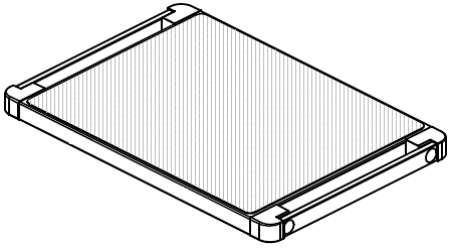

WARNING

- **The shelf can bear a maximum of 60kg load (including the load of the side rail and drawer). Do not overload it.**
- **The folding shelf can bear a maximum of 40kg load. Do not overload it.**
- **A drawer can bear a maximum of 7kg load. Do not overload it.**
- **Each side rail can bear a maximum of 10kg load. Do not overload it. If the keyboard tray is configured,the side rail can bear a maximum of 15kg load.**
- **The keyboard tray can bear a maximum of 15kg load.Do not overload it.**
- **Keep fingers, hands and foreign objects such as cords or cables out of the way when adjusting the shelves or securing equipment on the unit.**
- **It is recommended that the equipment on the unit be secured with cords or other fastenings in case of equipment falling off and causing personal injury or property damage.**
- **Exercise caution when carrying the devices onto the shelves. Improper handling of awkward devices can result in personal injury and/or device damage.**

CAUTION

- **The shelf height is to be adjusted by personnel authorized by Nanjing Mindray only.**

4.2 Wire Basket

4.2.1 Wire Basket (common)

The wire basket is used for storage of disposable catheters or disposable gloves and management of cables and hoses.

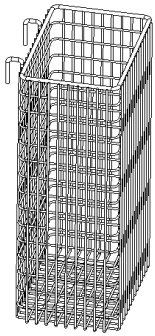

4.2.2 Foot Switch Wire Basket

The foot switch wire basket is used for storage of foot switch and its cables.

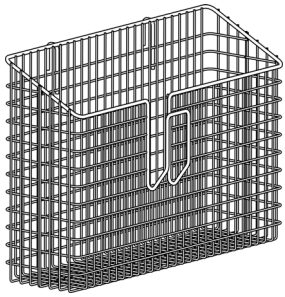

WARNING

- **The wire basket can bear a maximum load of 5kg. Do not overload it.**

CAUTION

- **The wire basket should be mounted on the side rail of the shelf securely to prevent damage caused by unexpected collision.**

4.3 Manager Box

4.3.1 Rail-mount Manager Box

The rail-mount manager box is mounted on the side rail of the shelf and is used for storage of medical supplies. The opening at its bottom can be used for tissue extraction.

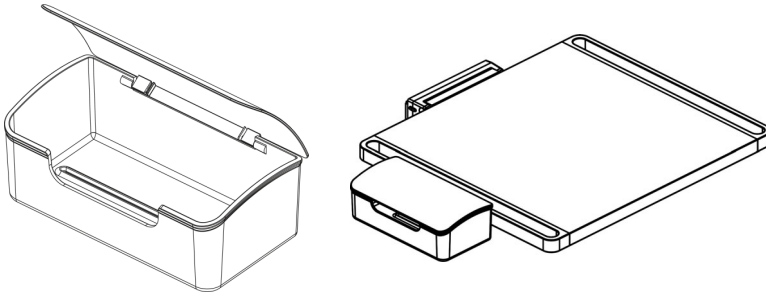

WARNING

- **The rail-mount manager box can bear a maximum load of 1kg. Do not overload it.**
- **Fragile and sharp items are not recommended to be placed in the rail-mount manager box. Otherwise, personnel injury or device damage is possible.**

4.3.2 Manager Box for Sputum Suction Cannula

The manager box is used for storage of disposable sputum suction cannula.

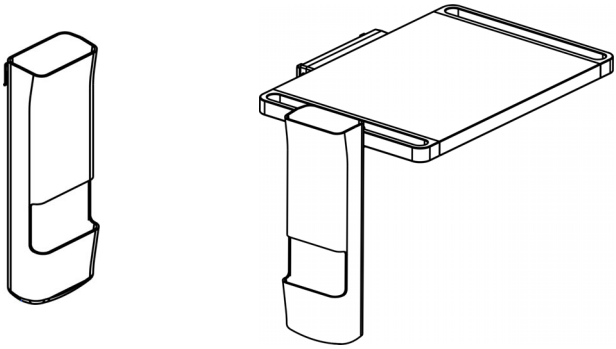

4.3.3 Manager Box for Respiratory Hag

The manager box is used for hanging respiratory hag and mask.

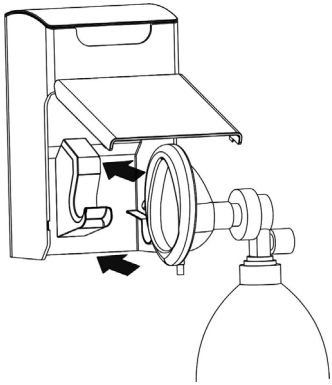

4.4 Cable Management System

The cable management system is used to lead cables and hoses.

4.4.1 Rail-mount Cable Manager

You can wind the cables around the hook.

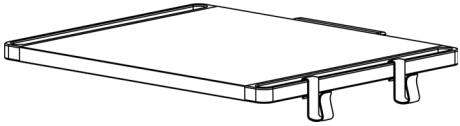

4.4.2 Leadwire Manager

The leadwire manager is used to collect and manage the cables of the patient monitor.

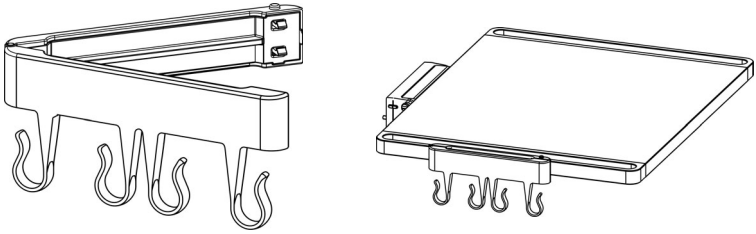

You can:

1. Press the button and open the leadwire manager.
2. Arrange the cables and then close the leadwire manager.
3. Wind the cables around the hooks.

4.4.3 Power Cable Manager for Medical Device

The cable manager is used to collect and manage cables of such medical devices as patient monitor and ventilator.

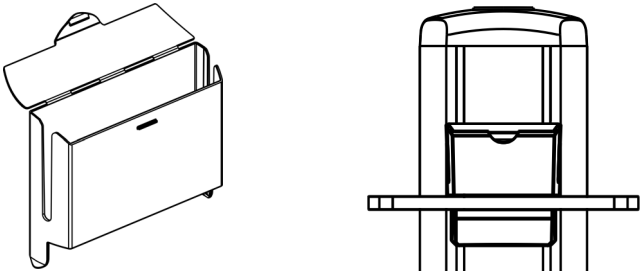

You can:

1. Connect one terminal of the power cable to the power port of the medical device.
2. Arrange the cables and put them into the cable manager; make sure the reserved length of the cable is sufficient to plug the other terminal into the electrical socket on the distribution module.
3. Close the flip cover.

4.4.4 Power Cable Manager for Infusion and Syringe Pump

The cable manager is used to collect and manage cables of infusion pumps and syringe pumps.

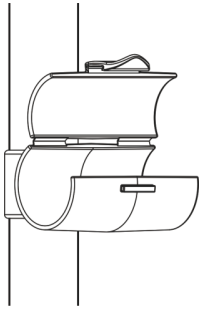

You can:

1. Fasten the cable manager onto the pole and open the flip cover of the cable manager.
2. Arrange the cables, wind them around the groove of the cable manager, and close the flip cover.
3. When using the cable manager combined with the extension arm cable manager, the rest length of the cables can be collected by the extension arm cable manager. Make sure the reserved length of the cable is sufficient to plug the electrical connector into the electrical socket on the distribution module.

4.4.5 Hose Hook

The hose hook is used to collect and manage medical gas hoses.

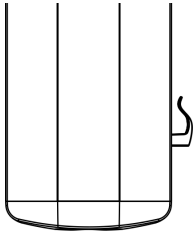

4.4.6 Chamber Cable Manager

The chamber cable manager is used to collect and manage device cables.

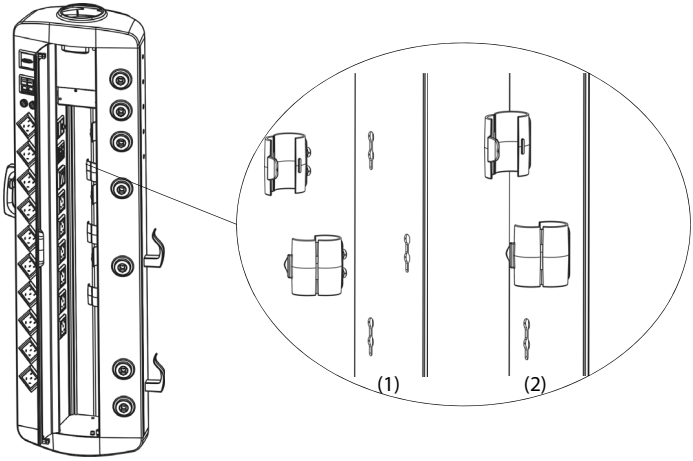

You can:

1. Guide the power cord through the silicone strip into the distribution module.
2. Take out the cable manager from the distribution module, as shown in Figure (1). Arrange the cables into the cable manager and make sure the reserved length of the cables is sufficient to insert the power plug into the electrical socket on the distribution module.
3. Reinstall the cable manager onto the distribution module, as shown in Figure (2).

4.5 Extension Arm

- The extension arm is for mounting the infusion pole and supporting infusion pumps, syringe pumps and feeding pumps.
- The extension arm is rotatable.

4.5.1 Front Extension Arm

The front extension arm is for supporting infusion pumps and syringe pumps. The cable manager (1) mounted on it is used to collect and manage the cables of infusion pumps and syringe pumps.

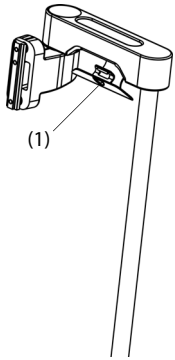

Collect and manage the cables of infusion pumps and syringe pumps, you can:

1. Open the front extension arm cable manager.
2. Arrange the cables and wind them around the cable manager; make sure the reserved length of the cables is sufficient to plug the electrical connector into the electrical socket on the distribution module.

WARNING

- **The front extension arm can bear a maximum of 15kg load. Do not overload it.**

4.5.2 Double Extension Arms

The double extension arms are for supporting infusion pumps and syringe pumps. The articulations of double extension arms are rotatable.

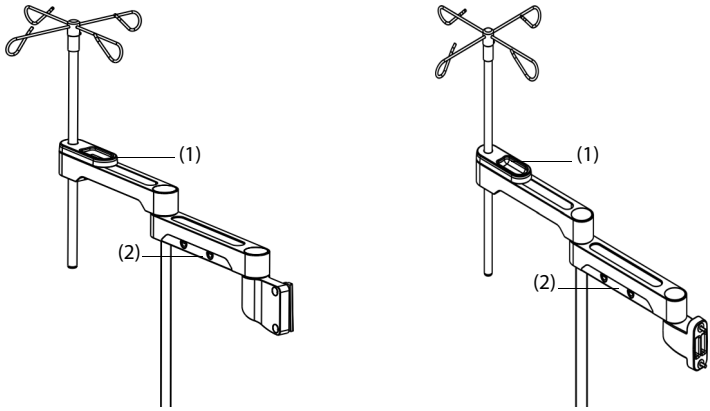

Adjust the height of the infusion pole, you can:

1. Hold the infusion pole and unscrew the handle locker (1) clockwise or counterclockwise.
2. Adjust the infusion pole to a proper height.
3. Screw the handle locker (1) to lock the infusion pole.

Collect and manage the cables of infusion pumps and syringe pumps, you can:

1. Open the double extension arms cable manager (2).
2. Arrange the cables and wind them around the cable manager; make sure the reserved length of the cables is sufficient to plug the electrical connector into the electrical socket on the distribution module.

WARNING

- **The double extension arms can bear a maximum of 30kg load. Do not overload it.**
- **The arm 1 of double extension arms can bear a maximum of 30kg load. Do not overload it.**
- **The arm 2 of double extension arms can bear a maximum of 5kg load. Do not overload it.**

4.5.3 Extension Arm for Feeding Pump

The extension arm for feeding pump is for supporting feeding pumps. The articulation of extension arm for feeding pump is rotatable.

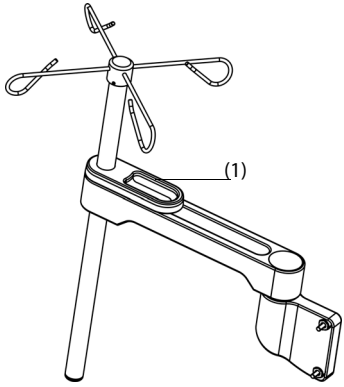

Adjust the height of the infusion pole, you can:

1. Hold the infusion pole and unscrew the handle locker (1) clockwise or counterclockwise.
2. Adjust the infusion pole to a proper height.
3. Screw the handle locker to lock the infusion pole.

WARNING

- **The extension arm for feeding pump can bear a maximum of 15kg load. Do not overload it.**

4.6 Endoscopy Camera Holder

The endoscopy camera holder is used for storage of endoscopy camera.

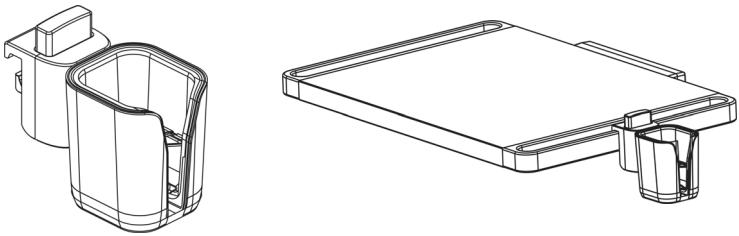

4.7 Fastening to Fix an Anesthesia Machine on Pendant

The fastening is usually mounted on the power unit. It is suitable for attachment and lifting of an anesthesia device or MIS cart.

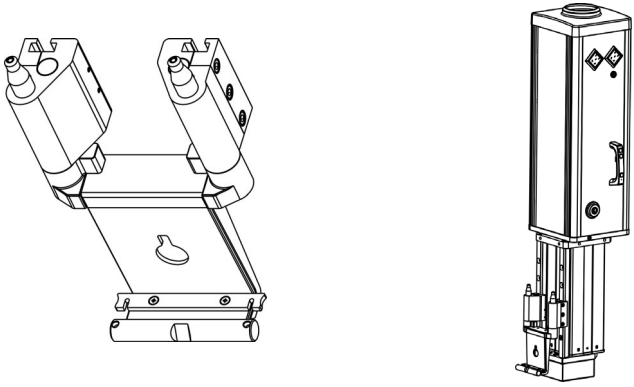

To mount an anesthesia device onto the fastening, you can:

1. Lower the unit to the limit position.
2. Position your anesthesia device against the unit.
3. Align your device with the tapered mounting pins which can help to position the unit correctly.
4. Raise the unit to the desired position.

WARNING

- **Contact the customer service department authorized by Nanjing Mindray or your local distributor before installing a new anesthesia cart to the unit. Improper installation can damage the unit and void the warranty.**
- **Do not place anything or any part of your body below the unit when lowering it.**

4.8 Rail System

The rail system is used to mount accessories.

■ Closed straight rail

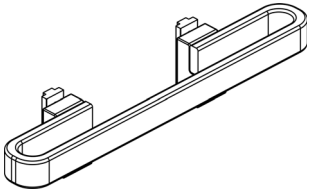

■ Column rail

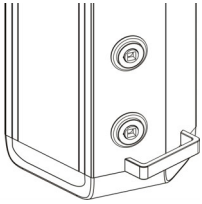

■ Curved rail

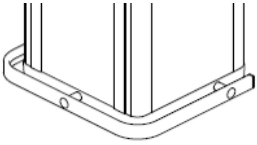

WARNING

- **The closed straight rail can bear a maximum load of 30kg. Do not overload it.**

4.9 Probe Extension

The probe extension is mounted on the side rail of the shelf and is used for oxygen and vacuum outlets.

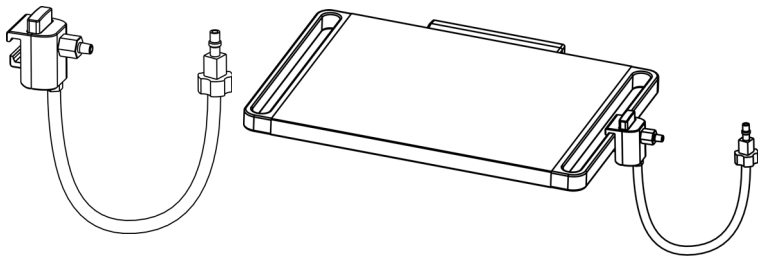

This page intentionally left blank.

5 Cleaning and Disinfection

5.1 Safety Information

The product must be cleaned and disinfected after every use.

WARNING

- **Use only Mindray approved cleaners and disinfectants and methods listed in this chapter to clean or disinfect your equipment. Warranty does not cover damage caused by unapproved substances or methods.**
- **Do not mix disinfecting solutions as hazardous gases may result.**
- **We make no claims regarding the efficacy of the listed chemicals or methods as a means for controlling infection. For the method to control infection, consult your hospital's infection control officer or epidemiologist.**
- **Agents containing alcohol can form explosive vapor mixtures and ignite where high-frequency equipment is being used. Do not use the cleaners or disinfectants containing alcohol where high-frequency surgical equipment may be used.**
- **Always wear gloves for cleaning and disinfection. Neglect of this may cause infection.**
- **Be sure to disconnect the power supply before cleaning and disinfection.**
- **The responsible hospital or institution shall carry out all cleaning and disinfection procedures specified in this chapter.**
- **Never grease gas connectors. Explosion hazard may be present. Keep grease and lubricant away from the oxygen and other gas outlets.**

CAUTION

- **Do not clean/disinfect the medical supply unit mechanically.**
- **Never immerse any part of the equipment or accessories in liquids.**
- **Particles of grime may become encapsulated and lead to the product not reaching the desired germ-reduction after disinfection. Before disinfection, the product must be cleaned thoroughly of contamination and encapsulated particles of grime and then be dried.**

- **Any contact of cleaners or disinfectants with connectors may cause corrosion.**
- **Do not pour or spray any liquid directly on the equipment or accessories or permit fluid to seep into live parts inside the equipment.**
- **If you spill liquid on the equipment or accessories, disconnect the power supply, dry the equipment and contact your service personnel.**
- **Improper cleaning/disinfection can damage the medical supply unit. Do not spray the cleaning agent/disinfectant directly into the joints or gaps. Do not use high pressure to clean/disinfect components.**
- **Never use abrasive materials (such as steel wool or silver polish), or strong solvent (such as acetone or acetone-based cleaners) for cleaning.**
- **Do not use polish or steel cleaner to clean or disinfect stainless steel surfaces.**
- **Dilute and use the cleaners or disinfectants according to the manufacturer's instructions.**
- **The inside cleaning of the medical supply unit is to be maintained and/or serviced by personnel authorized by Nanjing Mindray only.**
- **Do not allow water to infiltrate the service components inside the unit.**
- **Do not use disinfectants containing alcohol to clean the plastic components.**
- **Do not use scouring agents.**
- **Do not use water containing metal particles, any metal tools (such as wire brushes or steel wool), or products containing hydrochloric acid to clean the unit.**
- **Do not use the disinfectants containing chlorine or compounds which can release chlorine to disinfect the metal parts. Long-term use of these disinfectants may corrode the metal parts, hence compromising safety and effectiveness of the device. It is recommended that metal parts be disinfected by 2% alkaline glutaraldehyde or 0.5% peroxyacetic acid.**

NOTE

- **Be sure to follow the related national hygiene and disinfection regulations to carry out cleaning and disinfection procedures.**
- **Check the equipment or accessories after cleaning and disinfecting. Stop use if there is any sign of wear or damage.**
- **Clean or disinfect the equipment surface at room temperature. Be sure to follow the disinfectants' instruction if the disinfectants have special temperature requirements for disinfection.**

5.2 Cleaning

The surface of the unit should be cleaned and disinfected regularly and at least once a week is recommended.

5.2.1 Preparation before Cleaning

1. Cut off the electrical power supply and gas supply to the unit before cleaning and disinfecting.
2. Disconnect all the gas probes and electrical connectors from your unit.

5.2.2 Cleaning Procedure

1. Use a piece of lint-free clean cloth to wipe off the dust gently and thoroughly.
2. Use a piece of lint-free cloth moistened with cleaner (clean water or soap solution) to wipe the surface.
3. Use a piece of disposable lint-free cloth moistened with water to clean the surface.
4. Use a piece of dry lint-free cloth to wipe the surface dry.

NOTE

- **Use proper amount of the cleaning agent to clean the medical supply unit, and remove any excessive agent by the dry cloth.**
- **Be sure to disinfect the equipment after cleaning.**

5.3 Disinfection

5.3.1 Recommended Disinfectants

Disinfect the equipment as required in your hospital's servicing schedule. Cleaning the equipment before disinfection is recommended. Always dilute and use disinfectants according to the manufacturer's instructions. The following table lists approved disinfectants:

Product name	Product type	Manufacturer
Alpet® D2 Surface Sanitizing Wipes	Wipes	BEST SANITIZERS INC™.
CIDEX® OPA	Liquid	Gilag GmbH International Advanced Sterilization products
Clorox Dispatch® Hospital Cleaner Disinfectant Towels with Bleach	Wipes	Clorox professional products company

Product name	Product type	Manufacturer
Clorox Healthcare® Bleach Germicidal Wipes	Wipes	Clorox professional products company
Clorox Healthcare® Hydrogen Peroxide Cleaner Disinfectant Wipes	Wipes	Clorox professional products company
Metrex CaviCide1™	Liquid, spray	METERX® RESEARCH
Metrex CaviWipes™	Wipes	METERX® RESEARCH
PDI Sani-Cloth® AF3 Germicidal Disposable Wipe	Wipes	PDI Inc.
PDI Sani-Cloth® Bleach Germicidal Disposable Wipe	Wipes	PDI Inc.
PDI Sani-Cloth® HB Germicidal Disposable Wipe	Wipes	PDI Inc.
PDI Sani-Cloth® Plus Germicidal Disposable Wipe	Wipes	PDI Inc.
PDI Super Sani-Cloth® Germicidal Disposable Wipe	Wipes	PDI Inc.
Virex® II 256 (1:256)	Liquid	Diversey Inc
JIAN ZHI SU Disinfectant Tablets	Tablet	Beijing ChangJiangMai Medical Science Technology Co. Ltd
JIAN ZHI SU Surface Disinfectant Spray	Liquid, spray	Beijing ChangJiangMai Medical Science Technology Co. Ltd
JIAN ZHI SU Disinfectant, Double-chain Quaternary Ammonium	Liquid	Beijing ChangJiangMai Medical Science Technology Co. Ltd
DIAN'ERKANG Surface Wipes	Wipes	Shanghai Likang Disinfectant Hi-Tech Co., Ltd
DIAN'ERKANG Surface Disinfectant	Liquid	Shanghai Likang Disinfectant Hi-Tech Co., Ltd
DIAN'ERKANG Disinfectant Spray	Liquid, spray	Shanghai Likang Disinfectant Hi-Tech Co., Ltd
Clinell® Universal Wipes	Wipes	GAMA Healthcare Ltd
Clinell ® Sporicidal Wipes	Wipes	GAMA Healthcare Ltd
Tristel Duo™	Liquid,foam	Tristel solutions Limited

Product name	Product type	Manufacturer
Tristel Jet	Liquid, spray	Tristel solutions Limited
Surfa 'safe	Liquid, spray	ANIOS LABORATORIES
Aniosurf ND premium, 0.25%	Liquid	ANIOS LABORATORIES
Glutaraldehyde, 2%	Liquid	/
Ethanol, 70%	Liquid	/
Isopropanol, 70%	Liquid	/
Hydrogen peroxide, 3%	Liquid	/
Rely+On™ Virkon® High Level surface Disinfectant	Powder	Antec International Ltd
1-Propanol, 50%	Liquid	/
84 disinfectant (2000mg/L available chlorine)	Liquid	/
Trichloroisocyanuric acid (2000mg/L available chlorine)	Liquid	/
Peroxyacetic acid, 1%	Liquid	/
Domiphen, 2000mg/L	Liquid	/

5.3.2 Disinfection

1. Use a piece of lint-free cloth moistened with disinfectant to wipe the surface.
2. Use a piece of disposable lint-free cloth moistened with water to clean the surface.
3. Use a piece of dry lint-free cloth to wipe the surface dry.

CAUTION

- **Do not disinfect the equipment by fumigation methods. Otherwise, the equipment may be damaged.**

This page intentionally left blank.

6 Maintenance

Regular maintenance is essential to ensure that the equipment functions properly. This chapter contains information on equipment maintenance method and frequency.

6.1 Maintenance Safety Information

WARNING

- **To avoid electric shock, stop using the equipment if you find the housing has signs of damage. Contact the service personnel for help in that case.**
- **Failure on the part of the responsible individual hospital or institution using this equipment to implement a recommended maintenance schedule may cause undue equipment failure and possible health hazards.**
- **If you have any questions during the inspection, contact the customer service department authorized by Mindray.**
- **The device maintenance that requires disassembling shall be performed by the professional service personnel authorized by Mindray. Otherwise, device failure or personal safety accidents may occur.**
- **The service personnel must be properly qualified and thoroughly familiar with the operation of the equipment.**
- **Be sure to use spare parts supplied by Nanjing Mindray only.**
- **Do not repair the damaged paint by yourself. Otherwise, the paint may infiltrate the damaged area.**
- **Prior to the maintenance, make sure all electrical connections to the mains supply are cut off!**

CAUTION

- **The equipment and accessories shall not be tested or maintained while in use with a patient.**
- **If you discover a problem with any of the equipment, contact your service personnel or Mindray.**

NOTE

- **If needed, contact Mindray for circuit diagrams, component part lists, descriptions, calibration instructions, or other information concerning the repair of the equipment.**
- **The service life of the medical supply unit is 10 years. At the end of its service life, the device, as well as its accessories, must be disposed of in compliance with local governmental or hospital regulations.**

6.2 Maintenance Schedule

Follow the maintenance schedule or local regulations to perform maintenance. Be sure to clean and disinfect the equipment before test or maintenance. The following table lists the maintenance and testing schedule:

Test/Maintenance Item (user)	Recommended Frequency	Method
The equipment surface has no stain.	Every day, before first use.	Visual inspection.
Connectors, plugs and cables are not damaged and kinked.		Visual inspection.
Cables are securely connected with the equipment.		Visual inspection or operation inspection.
The painting is not damaged.		Visual inspection.
Mechanical parts are not damaged.		Visual inspection.
The plastic parts are not damaged.		Visual inspection.
The suspension system is not deformed.		Visual inspection.
Gas identity is correct.		Visual inspection.
The swivel arm and distribution module can rotate freely.		See ***3.2 Positioning the Medical Supply Unit*** for details.
The lifting capacity is normal.		See ***3.4 Raising and Lowering the Pendant*** for details.

Test/Maintenance Item (user)	Recommended Frequency	Method
The brake works normally.		See ***3.5 Using the Pneumatic/Electromagnetic Brake (optional)*** for details.

Test/Maintenance Item (must be performed by authorized personnel)	Recommended Frequency	Method
Check for connections, gas leakage and accumulated oxidant gases.	On- demand service (yearly check is recommended.)	When changing the AGSS hose, be sure to: ■ check for leakage. ■ check for flow rate and pressure drop. When changing hoses of medical gases, be sure to: ■ check for leakage. ■ check for obstruction. ■ check for particulate contamination. ■ check for gas identity. ■ check for flow rate and pressure drop. ■ check for cross connection.
Hoses replacement.		
Check for electrical outlets and cables.		Visual inspection.
Mechanical appearance is not damaged.		Visual inspection.
Function inspection.		Operation inspection.
Check for the bearing, limit switches and brakes.		Operation inspection.

6.3 Disposal

Dispose of the equipment when its service life is reached.

WARNING

- **At the end of its service life, the equipment, as well as its accessories, must be disposed of in compliance with the local regulations. If you have any questions concerning disposal of the equipment, please contact Mindray.**
- **For disposal of parts and accessories, unless otherwise specified, follow local regulations regarding disposal of hospital waste.**
- **Dispose of the package material as per the applicable waste control regulations. Keep it out of children's reach.**

7 Troubleshooting

7.1 Common Error

WARNING

- **The chapter is meant to help you solve common errors only. In case you encounter problems not included in this chapter or following the introduced methods cannot solve the problem, contact the customer service department authorized by Mindray or your local distributor for help. Unauthorized device servicing is not allowed.**
- **Device servicing is to be performed by personnel authorized by Mindray only. Unauthorized device servicing may cause personal injury and/or property damage.**
- **Be sure to disconnect the equipment from AC power when device servicing.**
- **Device servicing and installation should be strictly based on technical data supplied by Mindray. If you are in need of more technical data, contact the customer service department authorized by Mindray or your local distributor.**

Error	Cause	Solution
The distribution module tends to drift.	The mechanical brake is broken.	Contact the customer service department authorized by Nanjing Mindray.
	The pneumatic brake is broken.	Contact the customer service department authorized by Nanjing Mindray.
The swivel arm moves difficultly.	The mechanical brake is too tight.	Contact the customer service department authorized by Nanjing Mindray.
	The pneumatic brake is not released.	Release pneumatic brake.
	The electromagnetic brake is not released.	Release electromagnetic brake.

Error	Cause	Solution
The swivel arm moves too easily.	The mechanical brake is too loose.	Contact the customer service department authorized by Nanjing Mindray.
	Pneumatic brake malfunction.	Contact the customer service department authorized by Nanjing Mindray.
	Electromagnetic brake malfunction.	Contact the customer service department authorized by Nanjing Mindray.
The motorized arm is not working.	Circuitry failure.	Contact the customer service department authorized by Nanjing Mindray.
	Power is turned off.	Contact the utility department of your institution.
The pneumatic brake is not released.	Gas valve malfunction.	Contact the utility department of your institution to check the compressed air system. If it is abnormal, contact the customer service department authorized by Nanjing Mindray.
	The control button is not working.	Contact the customer service department authorized by Nanjing Mindray.
The electromagnetic brake is not released.	The control button is not working.	Contact the customer service department authorized by Nanjing Mindray.
The AC indicator is not on.	The medical supply unit is powered off.	Contact the utility department of your institution.
	The cables connecting the control keypad and the oxygen concentration monitoring are loose.	Contact the utility department of your institution.
	The power cable of the oxygen concentration monitoring inside the distribution module is loose.	Contact the utility department of your institution.

Error	Cause	Solution
When the oxygen concentration value is not within a normal range, the mute key malfunctions.	The mute key of oxygen concentration monitoring is not pressed in place.	Press the mute key of oxygen concentration monitoring again.
Although there is no oxygen leakage, the indicator of high oxygen concentration is flashing orange and the sound is heard.	The environment temperature and humidity do not meet the operating condition.	Make sure the temperature and humidity meet the operating condition.
The gas outlet is not working.	The gas hose is not connected to your gas supply system.	Contact the customer service department authorized by Nanjing Mindray.
	The gas probe is not plugged in place.	Plug the probe again.
	The gas supply system is not working properly.	Contact the utility department of your institution.
There is moisture in your gas pipelines.	The gas pipelines are not sealed tightly.	Contact the customer service department authorized by Nanjing Mindray.
Squeaking noise is heard.	The gas hoses are not tightly connected to the outlet.	Contact the customer service department authorized by Nanjing Mindray.
	Compressed air leaks within your system.	Contact the customer service department authorized by Nanjing Mindray.
The electrical outlet is not working.	The power cables of your unit are not connected to your power supply system.	Contact the customer service department authorized by Nanjing Mindray.
	The power supply system is not working.	Contact the utility department of your institution.
	The electrical socket is broken.	Contact the customer service department authorized by Nanjing Mindray.

Error	Cause	Solution
The data outlet is not working.	The data outlet is broken.	Contact the customer service department authorized by Nanjing Mindray.
	The cables are broken.	Contact the customer service department authorized by Nanjing Mindray.
	The connector is not plugged in place.	Plug the connector again.

A Product Specifications

A.1 Safety Specifications

A.1.1 Product Classification

According to the protection against electrical shock	Class I, Type B.
According to the protection against harmful ingress of water or particulate matter	IP20.
According to the method(s) of sterilization	Non-sterilization.
According to the suitability for use in an oxygen rich environment	Not suitable for use in the presence of an oxygen rich environment.
According to the mode of operation	Continuous operation.

WARNING

- **To avoid the risk of electric shock, this equipment must only be connected to a supply mains with protective earth.**

A.1.2 Environmental Specifications

Item	Temperature (°C)	Humidity (non-condensing)	Atmospheric pressure (kPa)
Operating condition	5-40	15%-95%	70-106
Storage condition	–40-60	10%-95%	50-106

CAUTION

- **During transportation, make sure that the medical supply unit is well protected from rain, snow or mechanical collision.**
- **The medical supply unit shall be installed in a room that is dry, draughty, and without caustic gas.**

A.2 Power Supply Specifications

A.2.1 Power Supply

Power	100-127V/220-240V~, 50/60Hz, 25A
Output	100-127V/220-240V~, 50/60Hz, 16A

A.2.2 Fuse

HyPort P30	250V T 2.0AL/250V T 5.0AH
HyPort P60	250V T 2.0AL/250V T 5.0AH
HyPort P90	250V T 10.0AH

A.3 Installation and Use

A.3.1 Electrical Facilities

Electrical facilities within the installation environment shall be compliance with IEC 60364-7-710 and other local requirements.

A.3.2 Gas Facilities

Gas facilities within the installation environment shall be in compliance with ISO 7396-1/ EN ISO 7396-1and ISO 7396-2/EN ISO 7396-2.

A.3.3 Other Requirements

All other installation requirements specified by the operator's manual and the installation manual shall be met.

A.4 Performance Characteristics

A.4.1 HyPort P30

Model	Arm length (mm)	Max. load (kg)	
		Arm system-light	Arm system-heavy
Single arm	500	350	700
	750	300	580
	1000	240	450
	1250	220	400
Double arms	500+500	240	450
	750+500	220	400
	750+750	200	360
	1000+750	180	310
	1000+1000	160	270
	1250+750	/	270
	1250+1000	140	240
	1250+1250	120	/

A.4.2 HyPort P60

Model	Arm length (mm)	Max. load (kg)
Single arm	750	220
	1000	180
Double arms	500+750	220
	750+750	200
	1000+750	180
	1250+750	160

A.4.3 HyPort P90

Model	Arm length (mm)	Max. load (kg)	
		Arm system-light	Arm system-heavy
Single arm	500	/	700
	750	/	580
	1000	/	450
Double arms	500+500	/	450
	750+500	/	400
	750+750	/	360
	1000+750	/	310
	1000+1000	/	270

A.4.4 Maximum Load of the Unit

The maximum load is the load which the unit can bear. The maximum load varies depending on the type and length of the arm selected.

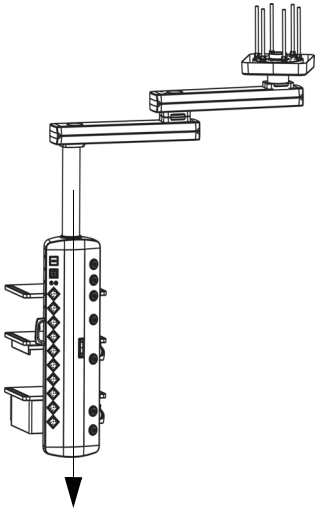

Max. load (kg)

A.4.5 Useful Load

The useful load is determined by subtracting the weight of the accessories from the maximum load of the unit (useful load = max. load of the unit – weight of the accessories).

A.4.6 Weight of Accessories

No.	Accessories	Weight(kg)
1.	Rail-mount shelf 1, 430×340mm	4.8
2.	Rail-mount shelf 2, 430×340mm, one drawer	12.7
3.	Rail-mount shelf 3, 430×340mm, double drawers	20.1
4.	Rail-mount shelf 4, 530×480mm	8.1
5.	Rail-mount shelf 5, 530×480mm, one drawer	19.1
6.	Rail-mount shelf 6, 530×480mm, high drawer	20
7.	Rail-mount shelf 7, 530×480mm, double drawers	29.1
8.	Rail-mount shelf 8, 530×480mm, keyboard tray	12.4
9.	Rail-mount shelf 9, 530×480mm, extension plate	10
10.	Rail-mount shelf 10, 530×480mm, extension plate, one drawer	21
11.	Rail-mount shelf 11, 630×480mm	9.3
12.	Rail-mount shelf 12, 630×480mm, one drawer	20.3
13.	Rail-mount shelf 13, 630×480mm, keyboard tray	13.6
14.	Rail-mount shelf 14, 480×480mm, foldable	6.8
15.	Rail-mount shelf 15, 530×480mm, control handle	8.1
16.	Rail-mount shelf 16, 530×480mm, control handle, one drawer	19.1
17.	Rail-mount shelf 17, 530×480mm, control handle, high drawer	20
18.	Rail-mount shelf 18, 530×480mm, control handle, double drawers	29.1
19.	Shelf accessory 1, extension plate	1.9
20.	Shelf accessory 2, adapter plate	1.4
21.	Pole-mount shelf 1, 630×480mm	9
22.	Pole-mount shelf 2, 630×480mm, one drawer	19.9

No.	Accessories	Weight(kg)
23.	Extension arm 1, double extension arms (infusion pole)	7
24.	Extension arm 2, extension arm for feeding pump (infusion pole)	4
25.	Extension arm 3, double extension arms (infusion pole)	7
26.	Extension arm 4, front extension arm (infusion pole)	2.5
27.	Wire basket	0.7
28.	Oxygen humidifier	0.3
29.	Vacuum regulator	0.6
30.	Display carrier	3
31.	Fastening to fix an anesthesia machine or MIS cart on pendant	5
32.	Probe extension	0.7
33.	Endoscopy camera holder	0.35
34.	Noise display	3

NOTE

- **The values listed in the table are only for reference. If you have any question, contact the customer department authorized by Nanjing Mindray or your local distributor.**

A.4.7 Gas Characteristics

1. Gas flow of the compressed medical gases shall meet the requirements of ISO 7396-1/EN ISO 7396-1.
2. Gas flow of the AGSS shall meet the requirements of ISO 7396-2/EN ISO 7396-2.

A.4.8 Standards

1. The medical supply unit is in compliance with ISO 11197/EN ISO 11197.
2. The manufacturing tests that have been performed on each medical supply unit indicate the requirements of ISO 11197/EN ISO 11197 have been met.

This page intentionally left blank.

B Accessories and Parts List

NO.	Description
1.	Gas outlet 1
2.	Gas outlet 2
3.	Gas outlet 3
4.	Gas outlet 4
5.	Gas outlet 5
6.	Gas outlet 6
7.	Gas outlet 7
8.	Gas outlet 8
9.	Gas outlet 9
10.	Electrical socket
11.	Reserved mounting hole
12.	Oxygen concentration monitoring
13.	Examination lamp
14.	GCX VHM series workstation
15.	Shelf
16.	Shelf accessory
17.	Extension arm
18.	Rail-mount cable manager
19.	Cable manager package
20.	Leadwire manager
21.	Power cable manager for infusion and syringe pump
22.	Power cable manager for medical device

23.	Hose hook
24.	Chamber cable manager
25.	Manager box for respiratory hag
26.	Rail-mount manager box
27.	Manager box for sputum suction cannula
28.	Wire basket
29.	Gas probe
30.	Monitor carrier adapter, rail-mount
31.	Oxygen humidifier
32.	Vacuum regulator
33.	Display carrier
34.	Fastening
35.	Closed straight rail
36.	Probe extension
37.	Endoscopy camera holder
38.	Endoscope hanger
39.	Noise display

C Electronic Interface

You may see the following electronic interfaces on the medical supply unit. The technical descriptions of the electronic interfaces are as follows:

Electronic Interface	Specification
RJ11	4-core interface, used for providing transmission wire for RJ11-compliant devices, and connecting to devices with RJ11 interface.
RJ45	Cat 6, used for providing transmission wire for RJ45-compliant devices, and connecting to devices with RJ45 interface.
RJ45	Cat 5e, used for providing transmission wire for RJ45-compliant devices, and connecting to devices with RJ45 interface.
S-Video	S-Video(Y/C), 4-core interface, used for providing transmission wire for S-Video-compliant devices, and connecting to devices with S-Video interface.
DVI-D	1080p60, female, 24+1 core interface, used for providing transmission wire for DVI-D-compliant devices, and connecting to devices with DVI-D interface.
HDMI	1080p60, Type A interface, used for providing transmission wire for HDMI-compliant devices, and connecting to devices with HDMI interface.
BNC	1080p60, used for providing transmission wire for BNC-compliant devices, and connecting to devices with BNC interface.
VGA	1080p60, female, 15 pin, used for providing transmission wire for VGA-compliant devices, and connecting to devices with VGA interface.
Corded hand control socket	4-core interface, complied with Mindray internal protocol, cylindrical plug-out self-locking connector.

This page intentionally left blank.

D EMC

The equipment complies with the EMC standard IEC60601-1-2.
Intended environments: this equipment is intended for use in professional healthcare facility EMC environment only.

WARNING

- **The use of unapproved accessories may diminish equipment performance.**
- **The equipment needs special precautions regarding EMC and needs to be installed and put into service according to the EMC information provided below.**
- **Use of this equipment adjacent to or stacked with other equipment should be avoided because it could result in improper operation. If such use is necessary, this equipment and the other equipment should be observed to verify that they are operating normally.**
- **Use of accessories, transducers and cables other than those specified or provided by the manufacturer of this equipment could result in increased electromagnetic emissions or decreased electromagnetic immunity of this equipment and result in improper operation.**
- **Portable RF communications equipment (including peripherals such as antenna cables and external antennas) should be used no closer than 30 cm (12 inches) to any part of the equipment, including cables specified by the manufacturer. Otherwise, degradation of the performance of this device could result.**
- **Other devices may interfere with this equipment even though they meet the requirements of CISPR.**
- **Use of portable or mobile communications devices can degrade the performance of the equipment.**

Guidance and Declaration-Electromagnetic Emissions		
The equipment is intended for use in the electromagnetic environment specified below. The customer or the user of the equipment should assure that it is used in such an environment.		
Emissions test	**Compliance**	**Electromagnetic environment-guidance**
Conducted and radiated RF EMISSIONS CISPR 11	Group 1	The equipment uses RF energy only for its internal function. Therefore, its RF emissions are very low and are not likely to cause any interference in nearby electronic equipment.
Conducted and radiated RF EMISSIONS CISPR 11	Class A	The equipment is suitable for use in all establishments other than domestic and those directly connected to the public low-voltage power supply network that supplies buildings used for domestic purposes.
Harmonic current EMISSIONS IEC 61000-3-2	Not applicable	
Voltage fluctuations and flicker EMISSIONS IEC 61000-3-3	Not applicable	

If the equipment is operated within the electromagnetic environment listed in Table Guidance and Declaration —Electromagnetic Immunity, the equipment will remain safe and provide the following essential performance: bear the devices properly without unintended motion is recognized as the essential performance.

Guidance and Declaration-Electromagnetic Immunity			
The equipment is intended for use in the electromagnetic environment specified below. The customer or the user of the equipment should assure that it is used in such an environment.			
Immunity test	**IEC 60601 test level**	**Compliance level**	**Electromagnetic environment - guidance**
Electrostatic discharge (ESD) IEC 61000-4-2	±8 kV contact ±2 kV, ±4 kV, ±8 kV, ±15 kV air	±8 kV contact ±2 kV, ±4 kV, ±8 kV, ±15 kV air	Floors should be wood, concrete or ceramic tile. If floors are covered with synthetic material, the relative humidity should be at least 30%.
Electrical fast transient/ burst IEC 61000-4-4	±2 kV for power supply lines ±1 kV for input/ output lines (length greater than 3 m)	±2 kV for power supply lines ±1 kV for input/ output lines (length greater than 3 m)	Mains power quality should be that of a typical commercial or hospital environment.
Surge IEC 61000-4-5	±0,5 kV, ±1 kV line(s) to line(s) ±0,5 kV, ±1 kV, ±2 kV line(s) to earth	±0,5 kV, ±1 kV line(s) to line(s) ±0,5 kV, ±1 kV, ±2 kV line(s) to earth	
Voltage dips, short interruptions and voltage variation on power supply input voltage IEC 61000-4-11	0 % U_T for 0,5 cycle At 0°, 45°, 90°, 135°, 180°, 225°, 270° and 315° 0 % U_T for 1 cycle and 70 % U_T for 25/30 cycles Cycle at 0° 0 % U_T for 250/ 300 cycle	0 % U_T for 0,5 cycle At 0°, 45°, 90°, 135°, 180°, 225°, 270° and 315° 0 % U_T for 1 cycle and 70 % U_T for 25/30 cycles Cycle at 0° 0 % U_T for 250/ 300 cycle	Mains power quality should be that of a typical commercial or hospital environment. If the user of our product requires continued operation during power mains interruptions, it is recommended that our product be powered from an uninterruptible power supply or a battery.

RATED power frequency magnetic fields IEC 61000-4-8	30 A/m 50 Hz / 60 Hz	30 A/m 50 Hz / 60 Hz	Power frequency magnetic fields should be at levels characteristic of a typical location in a typical commercial or hospital environment.
Note: U_T is the A.C. mains voltage prior to application of the test level.			

Guidance and Declaration-Electromagnetic Immunity			
The equipment is intended for use in the specified electromagnetic environment. The customer or the user of the device should assure that it is used in such an environment as described below.			
Immunity test	**IEC60601 test level**	**Compliance level**	**Electromagnetic environment-guidance**
Conducted disturbances induced by RF fields IEC61000-4-6	3 Vrms 150 kHz to 80 MHz 6 Vrms in ISM bands [a] between 0,15 MHz and 80 MHz	3 Vrms 150 kHz to 80 MHz 6 Vrms in ISM bands [a] between 0,15 MHz and 80 MHz	Portable and mobile RF communications equipment should be used no closer to any part of the device, including cables, than the recommended separation distance calculated from the equation applicable to the frequency of the transmitter. Recommended separation distances: $d = 1.2\sqrt{P}$ $d = 2\sqrt{P}$

Radiated RF EM fields IEC61000-4-3	3 V/m 80 MHz to 2.7 GHz	3 V/m 80 MHz to 2.7 GHz	$d = 1.2\sqrt{P}$ 80 MHz to 800 MHz $d = 2.3\sqrt{P}$ 800 MHz to 2.7 GHz Where P is the maximum output power rating of the transmitter in watts (W) according to the transmitter manufacturer and d is the recommended separation distance in meters (m). Field strengths from fixed RF transmitters, as determined by an electromagnetic site survey [b], should be less than the compliance level in each frequency range [c]. Interference may occur in the vicinity of equipment marked with the following symbol: .

Note 1: At 80 MHz to 800 MHz, the higher frequency range applies.
Note 2: These guidelines may not apply in all situations. Electromagnetic propagation is affected by absorption and reflection from structures, objects and people.

[a]: The ISM (industrial, scientific, and medical) bands between 150 kHz and 80 MHz are 6,765 MHz to 6,795 MHz; 13,553 MHz to 13,567 MHz; 26,957 MHz to 27,283 MHz; and 40,66 MHz to 40,70 MHz. The amateur radio bands between 0,15 MHz and 80 MHz are 1,8 MHz to 2,0 MHz, 3,5 MHz to 4,0 MHz, 5,3 MHz to 5,4 MHz, 7 MHz to 7,3 MHz, 10,1 MHz to 10,15 MHz, 14 MHz to 14,2 MHz, 18,07 MHz to 18,17 MHz, 21,0 MHz to 21,4 MHz, 24,89 MHz to 24,99 MHz, 28,0 MHz to 29,7 MHz and 50,0 MHz to 54,0 MHz.

[b]: Field strengths from fixed transmitters, such as base stations for radio (cellular/ cordless) telephones and land mobile radios, amateur radio, AM and FM radio broadcast and TV broadcast cannot be predicted theoretically with accuracy. To assess the electromagnetic environment due to fixed RF transmitters, an electromagnetic site survey should be considered. If the measured field strength in the location in which the device is used exceeds the applicable RF compliance level above, the device should be observed to verify normal operation. If abnormal performance is observed, additional measures may be necessary, such as re-orienting or relocating the device.

[c]: Over the frequency ranges 150 kHz to 80 MHz, field strengths should be less than 3V/ m.

GUIDANCE AND MINDRAY DECLARATION—ELECTROMAGNETIC IMMUNITY			
The equipment is intended for use in the electromagnetic environment specified below. The customer or the user of the equipment should assure that it is used in such an environment.			
Immunity test	**IEC60601 test level**	**Compliance level**	**Electromagnetic environment-guidance**
Proximity magnetic fields IEC 61000-4-39	65 A/m 134,2 kHz Pulse modulation 2,1 kHz	65 A/m 134,2 kHz Pulse modulation 2,1 kHz	/
	7,5 A/m 13,56 MHz Pulse modulation 50 kHz	7,5 A/m 13,56 MHz Pulse modulation 50 kHz	

Test specifications and minimum distances

Recommended separation distances between portable and mobile RF communications equipment and this equipment						
The equipment is intended for use in an electromagnetic environment in which radiated RF disturbances are controlled. The customer or the user of the equipment can help prevent electromagnetic interference by maintaining a minimum distance between portable and mobile RF communications equipment (transmitters) and the equipment as recommended below, according to the maximum output power of the communications equipment. Portable and mobile radio communications equipment (e.g. two-way radio, cellular/ cordless telephones and similar equipment) should be used no closer to any part of this equipment, including cables, than determined according to the following method:						
Test frequency (MHz)	**Band (MHz)**	**Service**	**Modulation**	**Maximum power (W)**	**Distance (m)**	**Immunity test level (V/m)**
385	380 - 390	TETRA 400	Pulse modulation 18Hz	1,8	0,3	27

Recommended separation distances between portable and mobile RF communications equipment and this equipment						
450	430 -470	GMRS 460 FRS 460	FM ±5 kHz deviation 1 kHz sine	2	0,3	28
710	704 - 787	LTE Band 13,17	Pulse modulation 217 Hz	0,2	0,3	9
745						
780						
810	800 - 960	GSM 800/ 900, tetra 800, iDEN 820, CDMA 850, LTE Band 5	Pulse modulation 18 Hz	2	0,3	28
870						
930						
1720	1700 - 1990	GSM 1800, CDMA 1900, GSM 1900, DECT, LTE Band 1, 3, 4, 25; UMTS	Pulse modulation 217 Hz	2	0,3	28
1845						
1970						
2450	2400 - 2570	Bluetooth, WLAN, 802.11 b/ g/n, RFID 2450, LTE Band 7	Pulse modulation 217 Hz	2	0,3	28

Recommended separation distances between portable and mobile RF communications equipment and this equipment						
5240	5100 - 5800	WLAN, 802.11 a/ n	Pulse modulati on 217 Hz	0,2	0,3	9
5500						
5785						

RECOMMENDED SEPARATION DISTANCES BETWEEN PORTABLE AND MOBILE RF COMMUNICATION DEVICE AND THE SYSTEM				
The equipment is intended for use in an electromagnetic environment in which radiated RF disturbance are controlled. The customer or the user of the device can help prevent electromagnetic interference by maintaining a minimum distance between portable and mobile RF communications equipment (transmitters) and the equipment as recommended below, according to the maximum output power of the communication equipment.				
Rated Maximum Output power of Transmitter Watts (W)	**Separation distance according to frequency of transmitter (m)**			
	150kHz-80MHz Out ISM bands $d = 1.2\sqrt{P}$	150kHz-80MHz In ISM bands $d = 2\sqrt{P}$	80MHz-800MHz $d = 1.2\sqrt{P}$	800MHz-2.7GHz $d = 2.3\sqrt{P}$
0.01	0.12	0.20	0.12	0.23
0.10	0.38	0.64	0.38	0.73
1.00	1.20	2.00	1.20	2.30
10.00	3.80	6.40	3.80	7.30
100.00	12.00	20.00	12.00	23.00

For transmitters at a maximum output power not listed above, the recommended separation distance d in meters (m) can be determined using the equation applicable to the frequency of the transmitter, where P is the maximum output power rating of the transmitter in watts (W) according to the transmitter manufacturer.

Note 1: At 80 MHz to 800 MHz, the higher frequency range applies.
Note 2: These guidelines may not apply in all situations. Electromagnetic propagation is affected by absorption and reflection from structures, objects and people.

This page intentionally left blank.

P/N:046-026800-00 (5.0)