TE5 Vet

Veterinary Diagnostic Ultrasound System

Operator’s Manual

[Basic Volume]

Contents

Intellectual Property Statement I
Responsibility on the Manufacturer Party I
Warranty II
Exemptions II
Customer Service Department III
Important Information IV
About This Manual V
Notation Conventions V
Operator's Manuals V
Hardcopy Manuals V
Software Interfaces in this Manual V
Conventions V

1 Safety Precautions 1-1

1.1 Safety Classifications 1-1
1.2 Meanings of Signal Words 1-2
1.3 Meaning of Safety Symbols 1-2
1.4 Safety Precautions 1-3
1.5 Latex Alert 1-10
1.6 Warning Labels 1-11

2 System Overview 2-1

2.1 Intended Use 2-1
2.2 Contraindication 2-1
2.3 Product Specifications 2-1
2.4 System Configuration 2-2
2.5 Introduction of Each Unit 2-7
2.6 Symbols 2-9

3 System Preparation 3-1

3.1 Move/Position the System 3-1
3.2 Power ON/OFF 3-1
3.3 Connecting the Power Cord 3-4
3.4 Connecting a Probe 3-5
3.5 Connecting the Footswitch 3-6
3.6 Connecting USB Devices 3-6
3.7 Installing a Graph/Text Printer 3-7
3.8 Installing a Video Printer 3-8
3.9 Brightness and Contrast Adjustment 3-8
3.10 Display Position Adjustment 3-9
3.11 Basic Screen & Operation 3-10

4 Exam Preparation 4-1

4.1 Animal Information 4-1
4.2 Select Exam Mode and Probe 4-7
4.3 Select the Imaging Mode 4-7
4.4 End an Exam 4-7
4.5 Activate an Exam 4-7

5 Image Optimization 5-1

5.1 Imaging Mode 5-1

5.2 B Mode Image Optimization 5-4
5.3 M Mode Image Optimization 5-10
5.4 Color Mode Image Optimization 5-13
5.5 Power Mode Image Optimization 5-18
5.6 PW/CW Doppler Mode 5-20
5.7 Smart B-line 5-26
5.8 Smart VTI 5-28
5.9 Smart IVC 5-29
5.10 Contrast Imaging 5-32
5.11 Anatomical M Mode 5-39
5.12 iScape View (Real-time Panoramic Imaging) 5-40
5.13 TDI 5-44
5.14 Color M Mode 5-46
5.15 3D Imaging 5-47

6 Display & Cine Review 6-1

6.1 Splitting Display 6-1
6.2 Image Magnification 6-1
6.3 iZoom (Full Screen View) 6-1
6.4 Freeze/Unfreeze the Image. 6-2
6.5 Cine Review 6-2
6.6 Image Compare 6-4
6.7 Cine Saving 6-5
6.8 Preset 6-5

7 Measurement 7-1

7.1 Basic Operations 7-1
7.2 General Measurements 7-2
7.3 Advanced Measurements 7-3
7.4 Measurement Accuracy 7-4

8 Physiological Signal 8-1

8.1 ECG 8-2
8.2 Parameters description 8-3

9 Annotations and Body Marks 9-1

9.1 Annotations 9-1
9.2 Voice Comments 9-3
9.3 Body Mark 9-5
9.4 Settings 9-5

10 Animal Data Management 10-1

10.1 Animal Information Management 10-1
10.2 Image File Management 10-1
10.3 Report Management 10-6
10.4 iStation - Animal Data Management 10-8
10.5 Recycle bin 10-10
10.6 iStorage 10-10
10.7 Print 10-10
10.8 Back Up Files using the DVD Drive 10-11
10.9 Animal Task Management 10-12
10.10 Administration 10-13
10.11 V-Access 10-20
10.12 Q-Path 10-20

11 DICOM/HL7 11-1
11.1 DICOM Preset 11-2
11.2 Verify Connectivity 11-12
11.3 DICOM Services 11-13
11.4 DICOM Media Storage 11-18
11.5 Structured Report 11-19
11.6 DICOM Task Management 11-19
12 Setup 12-1
12.1 System Preset 12-2
12.2 Exam Related Preset 12-16
12.3 Network Related Preset 12-18
13 Probes and Biopsy 13-1
13.1 Probes 13-1
13.2 Biopsy Guide 13-14
13.3 Middle Line 13-38
14 DVR Recording 14-1
14.1 Recording 14-1
14.2 Sending Image 14-1
14.3 DVR Video Replaying 14-1
15 Acoustic Output 15-1
15.1 Concerns with Bioeffects 15-1
15.2 Prudent Use Statement 15-1
15.3 ALARA Principle (As Low As Reasonably Achievable) 15-1
15.4 MI/TI Explanation 15-2
15.5 Acoustic Power Setting 15-3
15.6 Acoustic Power Control 15-4
15.7 Acoustic Output 15-4
15.8 Measurement Uncertainty 15-5
15.9 References for Acoustic Power and Safety 15-6
16 EMC Guidance and Manufacturer's Declaration 16-1
17 System Maintenance 17-1
17.1 Daily Maintenance 17-1
17.2 Troubleshooting 17-7
Appendix A Wireless LAN A-1
A.1 Use the Wireless feature A-1
A.2 Specifications A-4
A.3 Troubleshooting A-4
Appendix B Battery B-1
B.1 Overview B-1
B.2 Battery specification B-1
B.3 Battery Status Indicator B-1
Appendix C Barcode Reader C-1
C.3 JADAK Barcode Reader C-10
C.4 Setting in Ultrasound System C-13
C.5 Parameter Defaults C-17
C.6 Maintenance C-18

Appendix D Trolley and Accessories D-1
D.1 Trolley (UMT-400/UMT-400Plus) D-1
D.2 Table Stand D-4
D.3 Wall Mount D-5
Appendix E Electrical Safety Inspection E-1
E.1 Power Cord Plug E-1
E.2 Device Enclosure and Accessories E-2
E.3 Device Labeling E-2
E.4 Protective Earth Resistance E-2
E.5 Earth Leakage Test E-3
E.6 Enclosure Leakage Test E-3
E.7 Animal Leakage Current E-3
E.8 Mains on Applied Part Leakage E-4
E.9 Animal Auxiliary Current E-4
Appendix F iScanHelper F-1
F.1 Use iScanHelper for Reference F-1
F.2 Use iScanHelper for Learning or Training F-1
F.3 iScanhelper Menu F-1
F.4 Measurement F-3
Appendix G iWorks (Auto Workflow Protocol) G-1
G.1 Overview G-1
G.2 Normal iWorks Basic Procedure G-1
G.3 Screen Display G-2
G.4 View Operation G-2
G.5 Manual Examination G-3
G.6 Insert G-3
G.7 iWorks Settings G-4
Appendix H List of Vocal Commands H-1
Appendix I Transducer Maximum Surface Temperature I-1
Appendix J Acoustic Output Reporting Tables (IEC 60601-2-37: 2015) J-1
J.1 C4-1s J-1
J.2 C5-1s J-10
J.3 C11-3s J-18
J.4 L12-3RCs J-26
J.5 L12-4s J-33
J.6 L14-5sp J-40
J.7 L14-6Ns J-47
J.8 L14-6s J-54
J.9 L16-4Hs J-61
J.10 L20-5s J-68
J.11 P4-2s J-75
J.12 P7-3s J-84
J.13 P7-3Ts J-93
J.14 P10-4s J-102
J.15 SP5-11s J-111

© 2021 Shenzhen Mindray Animal Medical Technology Co., LTD. All Rights Reserved.
For this Operator's Manual, the issue date is 2021-04.

IMPORTANT!

The system is veterinary use only.

Intellectual Property Statement

Shenzhen Mindray Animal Medical Technology Co., LTD. (hereinafter called Mindray Animal Medical) owns the intellectual property rights to this product and this manual. This manual may refer to information protected by copyright or patents and does not convey any license under the patent rights or copyright of Mindray Animal Medical, or of others.

Mindray Animal Medical intends to maintain the contents of this manual as confidential information. Disclosure of the information in this manual in any manner whatsoever without the written permission of Mindray Animal Medical is strictly forbidden.

Release, amendment, reproduction, distribution, rental, adaptation, translation or any other derivative work of this manual in any manner whatsoever without the written permission of Mindray Animal Medical is strictly forbidden.

mindray is the trademark of SHENZHEN MINDRAY BIO-MEDICAL ELECTRONICS CO., LTD. in China and other countries. All other trademarks that appear in this manual are used only for informational or editorial purposes. They are the property of their respective owners.

Responsibility on the Manufacturer Party

Contents of this manual are subject to change without prior notice.

All information contained in this manual is believed to be correct. Mindray Animal Medical shall not be liable for errors contained herein or for incidental or consequential damages in connection with the furnishing, performance, or use of this manual.

Mindray Animal Medical is responsible for the effects on safety, reliability and performance of this product, only if:

- all installation operations, expansions, changes, modifications and repairs of this product are conducted by Mindray Animal Medical authorized personnel;
- the electrical installation of the relevant room complies with the applicable national and local requirements; and
- the product is used in accordance with the instructions for use.

⚠ NOTE ⚠

This equipment must be operated by skilled/trained clinical professionals.

⚠ WARNING ⚠

It is important for the hospital or organization that employs this equipment to carry out a reasonable service/maintenance plan. Neglect of this may result in machine breakdown or personal injury.

Warranty

THIS WARRANTY IS EXCLUSIVE AND IS IN LIEU OF ALL OTHER WARRANTIES, EXTOUCHED OR IMPLIED, INCLUDING WARRANTIES OF MERCHANTABILITY OR FITNESS FOR ANY PARTICULAR PURPOSE.

Exemptions

Mindray Animal Medical's obligation or liability under this warranty does not include any transportation or other charges or liability for direct, indirect or consequential damages or delay resulting from the improper use or application of the product or the use of parts or accessories not approved by Mindray Animal Medical or repairs by people other than Mindray Animal Medical authorized personnel.

This warranty shall not extend to:

- **Malfunction or damage caused by improper use or man-made failure.**
- **Malfunction or damage caused by unstable or out-of-range power input.**
- **Malfunction or damage caused by force majeure such as fire and earthquake.**
- **Malfunction or damage caused by improper operation or repair by unqualified or unauthorized service people.**
- **Malfunction of the instrument or part whose serial number is not legible enough.**
- **Others not caused by instrument or part itself.**

Customer Service Department

Manufacturer:	Shenzhen Mindray Animal Medical Technology Co., LTD.
Address:	Room 702, Tower 4, YESUN Intelligent Community III, No.1301-88 Guanguang Road, Xinlan Community, Guanlan Street, Longhua District, Shenzhen 518110, P. R. China
Website:	www.mindrayanimal.com
E-mail Address:	service@mindrayanimal.com
Tel:	+86 755 86541668
Fax:	+86 755 86541668

Manufacturer:	Mindray DS USA, Inc.
Address:	800 MacArthur Blvd. Mahwah, NJ 07430-0619 USA
Tel:	+1(201) 995-8000
Toll Free:	+1 (800) 288-2121
Fax:	+1 (800) 926-4275

Important Information

1. It is the customer's responsibility to maintain and manage the system after delivery.
2. The warranty does not cover the following items:
   (1) Damage or loss due to misuse or abuse.
   (2) Damage or loss caused by Acts of God such as fires, earthquakes, floods, lightning, etc.
   (3) Damage or loss caused by failure to meet the specified conditions for this system, such as inadequate power supply, improper installation or environmental conditions.
   (4) Damage or loss due to use of the system outside the region where the system was originally sold.
   (5) Damage or loss involving the system purchased from a source other than Mindray Animal Medical or its authorized agents.
3. This system shall not be used by persons other than fully qualified and certified medical personnel.
4. DO NOT make changes or modifications to the software or hardware of this system.
5. In no event shall Mindray Animal Medical be liable for problems, damage, or loss caused by relocation, modification, or repair performed by personnel other than those designated by Mindray Animal Medical.
6. The purpose of this system is to provide physicians with data for clinical diagnosis. The physician is responsible for the results of diagnostic procedures. Mindray Animal Medical shall not be liable for the results of diagnostic procedures.
7. Important data must be backed up on external memory media.
8. Mindray Animal Medical shall not be liable for loss of data stored in the memory of this system caused by operator error or accidents.
9. This manual contains warnings regarding foreseeable potential dangers, but you shall also be continuously alert to dangers other than those indicated. Mindray Animal Medical shall not be liable for damage or loss resulting from negligence or ignorance of the precautions and operating instructions described in this operator's manual.
10. If a new manager takes over this system, be sure to hand over this operator's manual to the new manager.

About This Manual

This operator's manual describes the operating procedures for TE5 Vet Veterinary Diagnostic Ultrasound System and the compatible probes. To ensure safe and correct operation, carefully read and understand the manual before operating the system.

Notation Conventions

In this operator's manual, the following words are used besides the safety precautions (see "Safety Precautions"). Please read this operator's manual before using the system.

NOTE:	Indicates information of interest to users of this system regarding exceptional conditions or operating procedures.

Operator's Manuals

You may receive multi-language manuals on compact disc or paper. Please refer to the English manual for the latest information and registration information.

The content of the operator manual, such as screenshots, menus or descriptions, may be different from what you see in your system. The content varies depending on the software version, options and configuration of the system.

Hardcopy Manuals

- Operator's Manual [Basic Volume]

  Describes the basic functions and operations of the system, safety precautions, exam modes, imaging modes, preset, maintenance and acoustic output, etc.
- Operator's Manual [Advanced Volume]
- Quick Reference Guide

  Contains a quick guide for basic system operations.

NOTE:	Manuals on CD are the manuals translated into languages other than English, according to the English manuals. If you find that the contents of the manuals on CD are NOT consistent with the system or the English manuals, refer ONLY to the corresponding English manuals. The accompanying manuals may vary depending on the specific system you purchased. Please refer to the packing list.

Software Interfaces in this Manual

Depending on the software version, preset settings and optional configuration, the actual interfaces may be different from those in this manual.

Conventions

In this manual, the following conventions are used to describe the buttons on the display (main screen), items in the menus, buttons in the dialog boxes and some basic operations:

- [Items in menu or on the screen or buttons in dialog box]: square brackets indicate items in menus or on the screen, or buttons in dialog boxes.
- Tap [Items or Buttons]: tap the corresponding item on the screen.
- [Items in menu] -> [Items in submenu]: select a submenu item following the path.

1 Safety Precautions

1.1 Safety Classifications

- According to the type of protection against electric shock:

  Class I equipment + internally powered equipment
- According to the degree of protection against electric shock:

  Type-BF applied part
- According to the degree of protection against harmful ingress of water:

  The main unit is rated IPX0

  The probes are rated IPX7

  The foot switch (can be applied in the operating room) is rated IPX8.

  The power adapter is rated IPX1.
- According to the disinfection and sterilization method(s) recommended by manufacturer:

  Equipment with disinfection and sterilization method(s) recommended by manufacturer.
- According to the degree of safety of application in the presence of a FLAMMABLE ANESTHETIC MIXTURE WITH AIR OR WITH OXYGEN OR NITROUS OXIDE

  EQUIPMENT not suitable for use in the presence of a FLAMMABLE ANESTHETIC MIXTURE WITH AIR OR WITH OXYGEN OR NITROUS OXIDE
- According to the mode of operation:

  Continuous operation
- According to the installation and use:

  Portable equipment

  Mobile equipment (when the system is installed on the trolley)
- Does the equipment has any defibrillation-proof applied parts:

  Non-defibrillation-proof applied part
- Permanently installed equipment or non-permanently installed equipment:

  Non-permanently installed equipment

1.2 Meanings of Signal Words

In this manual, the signal words ⚠**DANGER**, ⚠**WARNING**, ⚠**CAUTION**, **NOTE** and Tip are used regarding safety and other important instructions. The signal words and their meanings are defined as follows. Please understand their meanings clearly before reading this manual.

Signal word	Meaning
⚠**DANGER**	**Indicates an imminently hazardous situation that, if not avoided, will result in death or serious injury.**
⚠ **WARNING**	**Indicates a potentially hazardous situation that, if not avoided, could result in death or serious injury.**
⚠**CAUTION**	**Indicates a potentially hazardous situation that, if not avoided, may result in minor or moderate injury.**
NOTE	Indicates a potentially hazardous situation that, if not avoided, may result in property damage.
Tips	Important information that helps you use the system more effectively.

1.3 Meaning of Safety Symbols

Symbol	Description
	Type-BF applied part The ultrasound probes connected to this system are type-BF applied parts. The ECG leads within this system is type-BF applied part.
	General warning sign.
	Caution!
	Animal/user infection due to contaminated equipment. Be careful when performing cleaning, disinfection and sterilization.
	Animal injury or tissue damage from ultrasonic radiation. The ALARA principle must be practiced when operating the ultrasound system.

1.4 Safety Precautions

Please observe the following precautions to ensure animal and operator's safety when using this system.

⚠ **DANGER:**	**DO NOT use flammable gasses, such as anesthetic gas or hydrogen, or flammable liquids such as ethanol, near this system, because there is danger of explosion.**

⚠WARNING:

1. **Do connect the adapter power plug of this system and power plugs of the peripherals to well-grounded wall receptacles that meet the ratings indicated on the rating nameplate. Using a multifunctional receptacle may affect the system protective grounding performance, and cause the leakage current to exceed safety requirements.**

   Use the cable provided with this system to connect the printer. Other cables may result in electric shock.

   You must use the power adapter provided with the system; otherwise electric shock may result.

   You can only use the power supply method provided by Mindray Animal Medical, other power supply modes (e.g. using a UPS) may result in electric shock.
2. **Connect the protective grounding conductor before turning ON the system. Disconnect the grounding cable after turning OFF the system. Otherwise, electric shock may result.**
3. **For the connection of power and grounding, follow the appropriate procedures described in this operator's manual. Otherwise, there is risk of electric shock. DO NOT connect the grounding cable to a gas pipe or water pipe; otherwise, improper protective grounding may result or a gas explosion may occur.**
4. **Before cleaning the system, disconnect the power cord from the outlet. Failure to do so may result in system failure and electric shock.**
5. **This system is not water-proof designed. DO NOT use this system in any place where water or any liquid leakage may occur. If any water is sprayed on or into the system, electric shock or device malfunction may result. If water is accidentally sprayed on or into the system, power off the system immediately and contact Mindray Animal Medical Customer Service Department or sales representative.**
6. **DO NOT use a probe that has a damaged, scratched surface, or exposed wiring of any kind. Immediately stop using the probe and contact Mindray Animal Medical Customer Service Department or sales representative. There is risk of electric shock if a damaged or scratched probe is used.**
7. **DO NOT allow the animal to contact the live parts of the ultrasound system or other devices, e.g. signal I/O ports. Electric shock may occur.**

8. **Do not use an aftermarket probe other than those specified by Mindray Animal Medical. The probes may damage the system, causing a profound failure, e.g. a fire in the worst case.**

9. **Do not subject the probes to knocks or drops. Use of a defective probe may cause an electric shock.**

10. **Do not open the covers and front panel of the system. Short circuit or electric shock may result when the system hardware is exposed and powered on.**

11. **DO NOT use this system simultaneously with equipment such as an electrosurgical unit, high-frequency therapy equipment, or a defibrillator, etc. This would result in a risk of electric shock to the animal.**

12. **When moving the system, you should first fold the LCD display, disconnect the system from other devices (including probes) and disconnect the system from the power supply.**

13. **Accessory equipment connected to the analog and digital interfaces must comply with the relevant IEC standards (e.g., IEC 60950 information technology equipment safety standard and IEC 60601-1 medical equipment standard). Furthermore, all configurations must comply with the standard IEC 60601-1 chapter 16 ME System. It is the responsibility of the person, who connects additional equipment to the signal input or output ports and configures a medical system, to verify that the system complies with the requirements of IEC 60601-1 chapter 16 ME System. If you have any questions regarding these requirements, consult your sales representative.**

14. **Prolonged and repeated use of display controls may result in hand or arm nerve disorders for some individuals. Observe the local safety or health regulations concerning the use.**

15. **DO NOT contact both the animal and the ultrasound system or the live parts of the ultrasound system (e.g. signal I/O ports). Electric shock may occur.**

16. **When using intra-cavity transducers, do not activate the transducer outside the animal's body.**

17. **If you have any doubts of the installation or routing of external protective cables, use the internal power supply of the system.**

18. **DO NOT put the ultrasound system in any soft materials (e.g. soft cloth or cotton, etc.) in case that the air vent becomes blocked.**

19. **Always read and follow carefully the manufacturer instructions on the contrast agent label.**

20. **Only use the ECG leads provided with the ECG module; otherwise electric shock may result.**

⚠CAUTION:

1. **Precautions concerning clinical examination techniques:**

   This system must be used only by qualified medical professionals.

   This operator's manual does not describe clinical examination techniques. The clinician should select the proper examination techniques based on specialized training and clinical experience.

2. **Malfunctions due to radio waves:**
   - **If a device emitting radio waves is used in the proximity of this system, it may interfere with operations. DO NOT use or take any devices transmitting RF signals (such as cellular phones, transceivers and radio controlled products) into the room where the system is located.**
   - **If a person brings a device that generates radio waves near the system, ask him / her to immediately turn OFF the device.**

3. **Precautions concerning movement of the system:**
   - **When you place the system on the trolley and move them together, you must secure all objects on the trolley to prevent them from falling. Otherwise you should separate the system from the trolley and move them individually.**
     When you have to move the system with the trolley upward or downward the stairs, you must separate them first and then move them individually.
   - **Object placed on the display may fall and injure an individual when moving.**
   - **Confirm that there is no peripheral device connected to the system before moving the system. Otherwise, peripheral device may fall and cause injury.**

4. **DO NOT expose the system to excessive vibration through transportation. Mechanical damage may result.**

5. **Do not connect this system to outlets with the same circuit breakers and fuses that control the current of devices such as life-support systems. If this system malfunctions and generates over current, or when there is an instantaneous current at power ON, the circuit breakers and fuses of the building's supply circuit may be tripped.**

6. **Always keep the system dry. Avoid transporting this system quickly from a cold place to a warm place; otherwise condensation or water droplets may form allowing a short circuit and possible electric shock.**

7. **If the circuit protector is tripped, it indicates that the system or a peripheral device was improperly shut down and that the system is unstable. You cannot repair the system under this circumstance and must call the Mindray Animal Medical Customer Service Department or sales representative.**

8. **There is no risk of high-temperature burns during normal ultrasound examinations. It is possible for the surface temperature of the probe to exceed the body temperature of an animal due to environmental temperature and exam mode combinations. Apply the probe only for a period of time required for the purpose of diagnosis.**

9. **The system and its accessories are not disinfected or sterilized prior to delivery. The operator is responsible for the cleaning and disinfection of probes and sterilization of biopsy brackets according to the manuals, prior to the use.**

   All items must be thoroughly processed to completely remove harmful residual chemicals, which will not only be harmful to the human body, but also damage the accessory.

10. **It is necessary to tap [End] in the bottom-left corner of the operating panel to end the current scan that is in progress and clear the current Animal Information field. Failure to do so may result in new animal data being combined with data of the previous animal.**

11. **DO NOT connect or disconnect the system's power cord or its accessories (e.g., a printer or a recorder) without turning OFF the power first. This may damage the system and its accessories or cause electric shock.**

12. **If the system is powered off improperly during operation, it may result in data damage of the system's hard disk or system failure.**

13. **Do not use the system to examine a fetus for a long period of time.**

14. **Do not use a USB memory device (e.g., a USB flash drive, removable hard disk) which has unsafe data. Otherwise, system damage may result.**

15. **It is recommended to only use the video devices specified in this manual.**

16. **Do not use gel, disinfectant, probes, probe sheath or needle-guided brackets that are not compatible with the system.**

17. **Read the Acoustic Output Principle in the operation manual carefully before operate this system on clinical examination.**

18. **Please use the ultrasound gel compliant with the relevant local regulations.**

NOTE:

1. DO NOT use the system in the vicinity of strong electromagnetic field (such as a transformer), which may affect the performance of the system.
2. DO NOT use the system in the vicinity of high-frequency radiation source, which may affect the performance of the system or even lead to failure.

3. To avoid damaging the system, DO NOT use it in following environment:
   (1) Locations exposed to direct sunlight.
   (2) Locations subject to sudden changes in environmental temperature.
   (3) Dusty locations.
   (4) Locations subject to vibration.
   (5) Locations near heat generators.
   (6) Locations with high humidity.
4. Turn ON the system only after the power has been turned OFF for a while. If the system is turned ON immediately after being turned OFF, the system may not be rebooted properly and could malfunction.
5. When using or placing the system, keep the system horizontal to avoid imbalance.
6. Remove ultrasound gel from the face of a probe when the examination is complete. Water in the gel may enter the acoustic lens and adversely affect the performance and safety of the probe.
7. You should properly back up the system to a secure external storage media, including system configuration, settings and animal data. Data stored to the system's hard drive may be lost due to system failure, improper operation or accident.
8. Do not apply external force to the touch screen; otherwise, the system may be damaged.
9. If the system is used in a small room, the room temperature may rise. Please provide proper ventilation and free air exchange.
10. To dispose of the system or any part, contact Mindray Animal Medical Customer Service Department or sales representative. Mindray Animal Medical is not responsible for any system content or accessories that have been discarded improperly.
11. Electrical and mechanical performance may be degraded due to long period of usage (such as current leakage or distortion and abrasion); the image sensitivity and precision may become worse too. To ensure optimal system operations, it is recommended that you maintain the system under a Mindray Animal Medical service agreement.
12. Ensure that the current exam date and time are the same as the system date and time.
13. DO NOT turn OFF the power supply of the system during printing, file storage or invoking other system operations. An interrupted process may not be completed, and can become lost or corrupted.
14. Use detachable power supply cord as mains power breaking device. DO NOT set equipment in a place where it is difficult to disconnect the detachable power supply cord！

Please read the following precautions carefully to ensure the safety of the animal and the operator when using the probes.

WARNING:

1. **The ultrasonic probe is only for use with the specified ultrasonic diagnostic system. Please refer to the 2.4.2**Probes and Needle-guided Brackets Available **to select the proper probe.**
2. **Confirm that the probe and cable are normal before and after each examination. A defective probe may cause electric shock to the animal.**
3. **Do not subject the probe to shock. A defective probe may cause electric shock to the animal.**
4. **Do not disassemble the probe as this may cause electric shock or malfunction.**
5. **Never immerse the probe connector into liquids such as water or disinfectant because the connector is not waterproof. Immersion may cause electric shock or malfunction.**
6. **A probe sheath must be installed over the probe before performing intra-cavity or intra-operative examination.**
7. **When using a probe, pay attention to the status of the ultrasound image. Do not use the probe to perform image acquisition when the image is frozen.**

CAUTION:

1. **When using the probe, wear sterile gloves to prevent infection.**
2. **Be sure to use sterile ultrasound gel. Please use the ultrasound gel compliant with the relevant local regulations. And manage the ultrasound gel properly to ensure that it does not become a source of infection.**
3. **In normal diagnostic ultrasound mode, there is no danger of a normal-temperature burn; however, keeping the probe on the same region of the animal for a long time may cause such a burn.**
4. **Do not use the carrying case for storing the probe. If the carrying case is used for storage, it may become a source of infection.**
5. **It is required to practice ALARA when operating ultrasound system. Minimize the acoustic power without compromising the quality of images.**
6. **The probe and the accessories supplied with it are not delivered disinfected or sterilized. Sterilization (or high-level disinfection) is required before use.**
7. **Disposable components (for example the probe sheath, the sterile gloves) are packaged sterile and are single-use only. Do not use if the integrity of the packaging has been violated or if the expiration date has passed. Use disposable components which comply with the relevant local regulations.**

8.	**Please use the disinfection or sterilization solution that recommended in this operator's manual; otherwise Mindray Animal Medical will not be liable for damage caused by other solutions. If you have any questions, please contact Mindray Animal Medical Customer Service Department or sales representative.**
9.	**The probe sheath contains natural rubber that can cause allergic reactions in some individuals.**
10.	**Do not use pre-lubricated condoms as a sheath. Lubricant may not be compatible with the transducer material and damage may result.**
11.	**Transducer damage may be caused by inappropriate gel, detergent or cleanser:** **Do not soak or saturate transducers with solutions containing alcohol, bleach, ammonium chloride compounds, acetone or formaldehyde.** **Avoid contact with solutions or coupling gels containing mineral oil or lanolin.**
12.	**The contrast agent used must comply with the relevant local regulations.**

NOTE:

1. Read the following precautions to prevent the probe from malfunction:
   - Clean and disinfect the probe before and after each examination.
   - After the examination, wipe off the ultrasound gel thoroughly. Otherwise, the ultrasound gel may solidify and the image quality would be degraded.
2. Ambient conditions:

   To prevent the probe from being damaged, do not use it where it will be exposed to:
   - Direct sunlight or X-rays
   - Sudden changes in temperature
   - Dust
   - Excessive vibration
   - Heat generators

   Use the probes under the specified ambient conditions, please refer to "13.1.6 Probe Environmental Conditions".
3. Repeated disinfection will eventually damage the probe, please check the probe's performance periodically.

NOTE: The following definition of the WEEE label applies to EU member states only: The use of this symbol indicates that waste electrical and electronic equipment must not be disposed of as unsorted municipal waste and must be collected separately. By ensuring that this system is disposed of correctly, you will help prevent bringing potential negative consequences to the environment and human health. For more detailed information with regard to returning and recycling this system, please consult the distributor from whom you purchased the system.

For system products, this label may be attached to the main unit only.

1.5 Latex Alert

When choosing a probe sheath, it is recommended that you directly contact CIVCO for obtaining information regarding probe sheaths, pricing, samples and local distribution. For CIVCO information, please contact the following:

CIVCO Medical Instruments

Tel: 1-800-445-6741

www.civco.com

⚠**WARNING:**	**Allergic reactions in animals sensitive to latex (natural rubber) may range from mild skin reactions (irritation) to fatal anaphylactic shock, and may include difficulty breathing (wheezing), dizziness, shock, swelling of the face, hives, sneezing, or itching of the eyes (FDA Medical Alert on latex products, "Allergic Reactions to Latex-containing Medical Devices", issued on March 29, 1991).**

1.6 Warning Labels

Warning labels are attached to this system to call your attention to potential hazards. The symbol ⚠ on warning labels indicates safety precautions.

The warning labels use the same signal words as those used in the operator's manual. Read the operator's manual carefully before using the system.

The name, design and meaning of each warning label are described as follows:

No.	Warning Labels	Meaning
1.		Read this information carefully before using the system.
2.	The following labels are available when the system works with the mobile trolley. a b c	(a) Do not place the system with the mobile trolley on a sloped surface. Otherwise the system may slide, resulting in personal injury or the system malfunction. Two persons are required to move the system over a sloped surface. (b) DO NOT sit on the trolley. (c) When the casters are locked, DO NOT push the trolley.
3.		Non-ionizing radiation

2 System Overview

2.1 Intended Use

The system is intended for veterinary use in ultrasound examination and diagnosis.

NOTE:	The functions described in the operator's manual may vary depending on the specific system purchased.

2.2 Contraindication

None.

2.3 Product Specifications

2.3.1 Imaging Mode

B Mode	B
M Mode	M Free Xros M
C Mode	Color Power(DirPower)
D Mode	PW/CW
Special imaging	Left Ventricular Opacification (LVO) Contrast TDI Color M Smart 3D

2.3.2 Power supply

Voltage	100-240V~; 19Vdc (DCU direct input)
Frequency	50/60Hz
Power input	2.0A (Power adapter) 5.4-2.6A (Trolley)
Fuse	T5AL, 250Vac (Power adapter)
Battery	14.8Vdc

2.3.3 Environmental Conditions

	Operating conditions	Storage and transportation conditions
Ambient temperature	0°C~40°C	-20°C~55°C
Relative humidity	30%~85% (no condensation)	20%~95% (no condensation)
Atmospheric pressure	700hPa~1060hPa	700hPa~1060hPa

⚠WARNING: Do not use this system in conditions other than those specified.

2.3.4 Dimensions and Weight

Dimensions (including probe holder): 130±10(Depth)x380±10(Width)x380±5(Height)mm

Weight (including batteries, three-probe socket configuration and one probe): <7.2Kg.

2.4 System Configuration

2.4.1 Standard Configuration

- Main unit (select configuration between one-probe socket and three-probe socket)
- Batteries (built-in)
- SSD card (built-in)
- System software
- Wireless adapter (built-in)
- Accessories
  - Operator's manuals
  - Probe holder

Applied part: probes.

2.4.2 Probes and Needle-guided Brackets Available

Probe model	Probe Type
C11-3s	Convex
L12-4s	Linear
L14-6s	Linear
L14-6Ns	Linear
P4-2s	Phased
P7-3Ts	Phased
L16-4Hs	Linear
P10-4s	Phased
L20-5s	Linear
P7-3s	Phased
SP5-1s	Phased
C5-1s	Convex
C4-1s	Convex
L12-3RCs	Linear
L14-5sp	Linear

Some of the probes have corresponding needle-guided brackets for biopsy. The available probes and the corresponding needle-guided brackets are listed as follows:

Probe model	Needle-guided Bracket Model	Biopsy angle/depth (±1°)	Applicable Biopsy Needle
L12-4s/L14-6Ns	NGB-007 plastic/needle detachable metal/needle detachable	40°, 50°, 60°	Metal: 14G, 16G, 18G, 20G, 22G Plastic: 13G, 15G, 16G, 18G, 20G
P4-2s/SP5-1s	NGB-011 metal/needle non-detachable	11°, 23°	13G, 15G, 16G, 18G, 20G
L14-6s	NGB-016 Metal/needle detachable	30°, 40°, 50°	14G, 16G, 18G, 20G, 22G
C11-3s	NGB-018 metal/needle detachable	15°, 25°, 35°	14G, 16G, 18G, 20G, 22G
C5-1s	NGB-022 Metal-needle detachable	25°, 35°, 45°	14G, 16G, 18G, 20G, 22G

Probe model	Needle-guided Bracket Model	Biopsy angle/depth (±1°)	Applicable Biopsy Needle
C4-1s	NGB-036 Metal-needle detachable	7°, 25°, 35°	14G, 16G, 18G, 20G, 22G
L12-3RCs	NGB-043 Metal-needle detachable	35° - 80°	20G ~ 23G
L12-3RCs	NGB-044 Metal-needle detachable	Biopsy depth: 5 mm, 10 mm, 15 mm, 25 mm, 35 mm	18G, 20G, 21G

Disposable needle-guided bracket

Some of the probes have corresponding disposable needle-guided brackets for biopsy. The available probes and the corresponding disposable needle-guided brackets are listed as follows

Probe model	Needle-guided Bracket Model
L14-6Ns, L12-4s	CIVCO 658-001
C4-1s	CIVCO 698-019
	CIVCO 698-013
L14-5sp	CIVCO 698-006

Note: The disposable needle-guided brackets are not configured or sold by Mindray Animal Medical. The user can purchase them based on the specific needs. See CIVCO for the use of each disposable needle-guided bracket.

CIVCO Probe Sheath and Brackets

To order Civco brackets or probe sheaths, contact:

Multi-Modality Imaging and Corporate Office:

Toll-free within the U.S. & Canada: 800. 445. 6741,

Toll-free Fax: 877.329.2482

Direct Dial: 319.248.6757 (International)

Fax: 319.248.6660

E-mail: order@civco.com

Internet: www.civco.com

2.4.3 Options

No.	Item	Remarks
1.	Footswitch	Types: 2-pedal/3-pedal
2.	Trolley See chapter “Appendix D Trolley and Accessories” for details.	

No.	Item		Remarks
3.	Wall mount/Table stand		After the wall mount/table stand is configured, power adapter and cables should be configured.
4.	VESA connector		After the VESA connector is configured, power adapter and cables should be configured.
5.	Power adapter		Table stand or wall mounting bracket should be configured.
6.	Power cable		The power adapter should be configured.
7.	Travelling case		After the travelling case is configured, power adapter and cables must be selected.
8.	External DVD recorder		/
9.	Ultrasound gel		/
10.	ECG module		The ECG module should be configured.
11.	ECG cables		ECG module should be configured.
12.	DC-IN cable		ECG module should be configured.
13.	Barcode reader		/
14.	iVocal microphone		/
15.	CW		/
16.	LVO		/
17.	iNeedle		/
18.	Abdomen/General Package		/
19.	Reproduction Package		/
20.	Cardiology Package		/
21.	Small Parts Package		/
22.	Vascular Package		/
23.	DICOM	DICOM Basic (including verify (SCU and SCP), task management, DICOM Storage, DICOM Print, DICOM Storage Commitment, DICOM Media Storage (including DICOM DIR))	/
		DICOM Worklist	DICOM Basic should be configured.
		DICOM MPPS	
		DICOM Reproduction SR	
		DICOM Vascular SR	
		DICOM Cardiac SR	
		DICOM Query/Retrieve	
		DICOM Breast SR	

No.	Item	Remarks
24.	Free Xros M	
25.	Tissue Doppler Imaging	Cardiology Package should be configured.
26.	Smart 3D	/
27.	IMT	Vascular Package should be configured.
28.	AutoEF	Cardiology Package should be configured.
29.	Contrast Imaging	/
30.	Contrast Imaging QA	/
31.	iWorks	/
32.	iScape View	/
33.	DVR Module	/
34.	McAfee	/
35.	Smart IVC	/
36.	Smart VTI	Cardiology Package should be configured.
37.	Smart B-line	/
38.	iVocal	iVocal microphone should be configured.

2.4.4 Peripherals Supported

No.	Item	Model
1.	Black/white video printer(digital)	MITSUBISHI P95DW-N SONY UP-D898MD
2.	Black/white video printer (analog)	SONY UP-X898MD
3.	Digital color video Printer	SONY UP-D25MD
4.	Barcode reader	LS2208 DS4308 JADAK HS-1M JADAK HS-1R
5.	Footswitch	971-SWNOM (2-pedals) 971-SWNOM (3-pedals)
6.	External DVD R/W drive	SDRW-08D2S-U
7.	iVocal	SAMSONXPD1 Headset SAMSONXPD1 Presentation PYLEPUSBMIC43

- Parts that can be used within animal environment:
  - Main unit;
  - Probes;
  - Footswitch;
  - Printers: MITSUBISHI P95DW-N, SONY UP-D25MD, SONY UP-D898MD, and SONY UP-X898MD.

NOTE:	1. If the ultrasound system cannot recognize the SONY UP-X898MD and SONY UP-D898MD printers automatically, you may need to change the settings on the printer: push <PUSH ENTER> to enter the main menu and select [DIGITAL]->[DRIVER], and select [897]. 2. USB cable length of the printers should be within 5-6 ft, otherwise the lifting of the trolley will be affected if the USB cable is too short or even the ultrasound system and the printer cannot be connected; or it's not easily to arrange the cable tidily if the USB cable is too long.

⚠**WARNING:**	**This system complies with IEC60601-1-2:2014, and its RF emissions meet the requirements of CISPR11 Class B. In a domestic environment, the customer or user should ensure the system is connected to Class B peripheral devices, otherwise RF interference may occur, and the customer or user must take adequate measures accordingly.**

2.5 Introduction of Each Unit

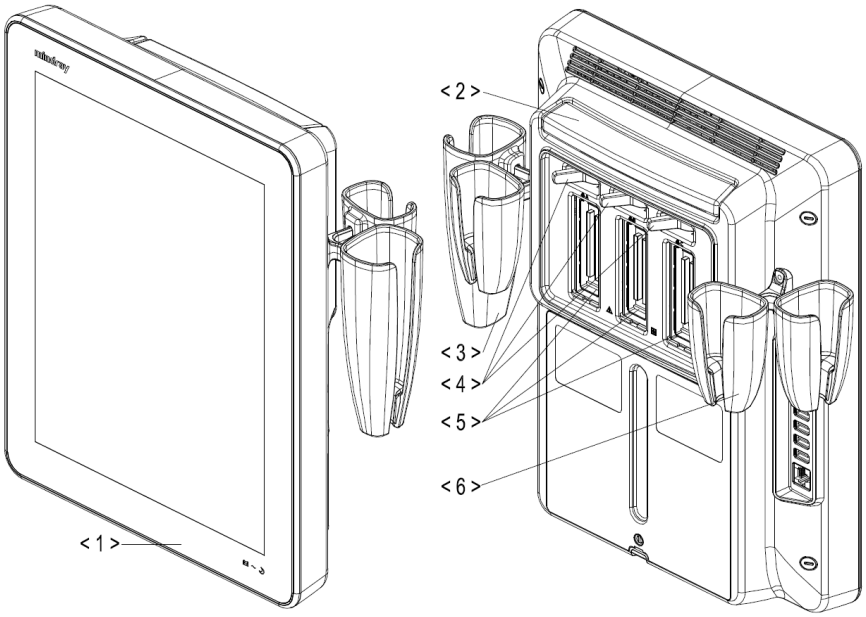

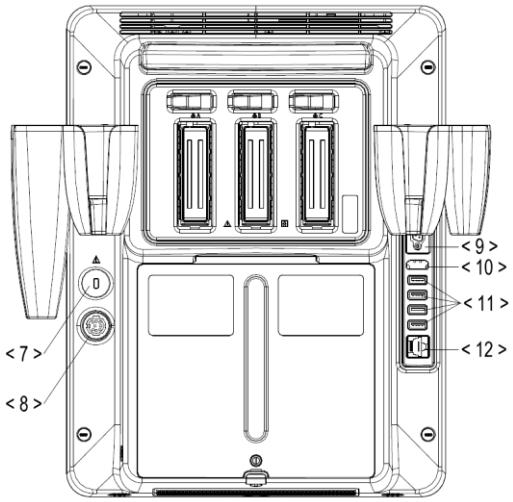

No.	Name	Function
<1>	Touch screen and display	Operator-system interface or control; displays the image and parameters during the scan. : Battery status indicator. ● Charging status: It illuminates in orange when batteries are charging; It illuminates in green when batteries are charged fully. ● Discharging status: It illuminates in green color when the power of the batteries is sufficient; It blinks in orange color for low battery power. : AC indicator The indicator is green at AC supply. The indicator is off when batteries are supplied without AC supply. : Standby indicator. Standby: blinking in orange. Other status: light off.
<2>	Telescoping handle	Used for moving the system occasionally.
<3>	Intra-cavity probe holder	Used for placing the probe.
<4>	Probe locking switch	Locks or unlocks the probe connecting with the main unit.
<5>	Probe port	Connects a probe to the main unit.
<6>	Probe holder	Used for placing the probe.
<7>	Kensington lock	Locks the main unit to the trolley in case of loss.
<8>	Power inlet	Connects with the power adapter.
<9>	Serial port for connecting ECG	Connects with the ECG module
<10>	HDMI	Used for extending the monitor.
<11>	USB ports	Connects USB devices.

No.	Name	Function
<12>	Network port	Connects to network.

NOTE: Mindray Animal Medical recommends using Category 2-certified HDMI output cables (marked as "High Speed") according to HDMI 1.3 standard for a good output effect. Otherwise, abnormal display effect may result. You can use a HDMI-to-DVI adapter for outputting to a display with DVI input.

When connecting TE5 Vet with an external display or recording devices via HDMI, choose a right output setting resolution ([Setup] ->[System] ->[Peripheral] -> [Display]), and please make sure the scan rate of 60Hz progressive is supported by the external device, otherwise malfunction may result.

2.6 Symbols

This system uses the symbols listed in the following table. Their meanings are explained as follows:

Symbol	Description
	Caution!
	Standby
	Type-BF applied part
	No user serviceable parts (power adapter)
	Battery installation position
SN	Product serial number
	Manufacture date
	Manufacturer
	Battery status indicator
~	AC (Alternating current)
	Standby status indicator
	Probe connector unlocking symbol
	Probe connector locking symbol
	Extending port
HDMI	HDMI port
	USB port

Symbol	Description
	Network port
	Probe socket
19V ⎓ 7.9A MAX	Power consumption
⚠ 4kg/8.8lbs	Maximum load for printer bracket on the trolley
AC 100-240V 50/60Hz 240VA ⚠	Trolley output
⚠ 3.1kg/6.8lbs	Maximum load for storage bin on the trolley
Rx Only	Caution: Federal Law restricts this device to sale by or on the order of a veterinarian.
MR	MR Unsafe – the system is not intended to be used within magnetic resonance (MR) environment.
CE	CE mark
ETL CLASSIFIED ETL CM C US LISTED Intertek 5019992	CONFORMS TO AAMI STD ES60601-1, IEC STD 60601-2-37，IEC STD 60601-1-6; CERTIFIED TO CSA STD C22.2 NO. 60601-1, 60601-2-37, 60601-1-6

3 System Preparation

3.1 Move/Position the System

Read and understand the safety precautions before positioning the system to ensure the safety of both the operator and the devices.

1. Switch off the power, and pull out the power plug.
2. Disconnect all cables from off-board peripheral devices.
3. Place the system in a desired location.
4. Leave at least 20cm at the back and both sides of the system.

⚠CAUTION:	**Maintain a generous, free air flowing space around the back and both sides of the system. Not doing so may result in failure due to the increased rise in the system's operating temperature.**

3.2 Power ON/OFF

3.2.1 Power the System ON

⚠ CAUTION:	**To ensure safe and effective system operation, you must perform daily maintenance and checks. If the system begins to function improperly, immediately stop scanning. If the system continues to function improperly, fully shut down the system and contact the Mindray Animal Medical Customer Service Department or a sales representative. If you use the system in a persistent improperly functioning state, you may harm the animal or damage the equipment.**

■ Check before Powering ON

Check before the system is powered on:

No.	Check Item
1	The temperature, relative humidity and atmospheric pressure meet the requirements of the operating conditions. See “2.3.3 Environmental Conditions” for details.
2	There is no condensation.
3	There is no distortion, damage or dirt on the system and peripheral devices. If any dirt is found, cleaning should be performed as illustrated in section “17 System Maintenance.”
4	There are no loose screws on the display or the trolley.
5	There is no cable damage (e.g., power cord). Maintain secure connections to the system at all times.
6	The probes and probe cables are free from damage or stains. See chapter “13 Probes and Biopsy” for details of probe cleaning and disinfection.
7	No miscellaneous odds and ends are attached or affixed to the display.

No.	Check Item
8	Ensure that all connections are free from damage and remain clear of foreign object blockages. There are no obstacles around the system and its air vent.
9	Probe cleaning and disinfection.
10	The entire scanning environment and field must be clean.
11	The locking mechanism of the casters (if there is a trolley) works normally.

■ Check the system after it is powered on

Press the power button at the right side of the ultrasound system to power the system on.

Check after the system is powered on:

No.	Check Item
1	There are no unusual sounds or smells indicating possible overheating.
2	There are no persistently displayed system error messages.
3	There is no evident excessive noise, or discontinuous, absent or black items in the B mode image.
4	Check whether there is abnormal heat on the surface of the probe during an ultrasound procedure. If you use a probe which is giving off excessive heat, it may burn the animal.
5	The display (main screen) can respond functionally.
6	The date and time are displayed correctly.

⚠ **WARNING:** **If you use a probe giving off excessive heat, it may burn the animal.**

If you find anything not functioning properly, this may indicate that the system is defective. In this case, shut down the system immediately and contact Mindray Animal Medical Customer Service Department or sales representative.

NOTE: When you start the system or switch between transducers, you may hear clicking sounds – this is expected behavior.

3.2.2 Power the System OFF

You must follow the correct procedures to power the system off. Also, after you upgrade the software or when the system is down, you need to power off and restart it.

If you will not use the system for a long period of time, you should:

1. Disconnect the power adapter.
2. Disconnect the mains power.
3. Turn off powers of all peripherals connected to the system.

■ To power the system off normally

1. Press the power button at the right side of the ultrasound system to see the option:
   - Shut down: to power the system off normally.
   - Standby: to enter standby status.
   - Cancel: to cancel the operation.
2. Select [Shut Down] to power the system off.

■ To shut down the system directly if it cannot be done normally:

Press and hold the power button for a long time and the system will power off without displaying the "Shutdown Confirm" screen. However, shutting down the system this way may destroy the data.

NOTE:	DO NOT rush direct shutdown of the system. It may damage the data. After the system is upgraded, use "Shut Down" to power the system off to make the upgraded data effective.

3.2.3 Standby

■ To enter standby:

- Select [Setup] -> [System] -> [General] to set the time for screensaver and standby. If the system is not carrying out an operation, the screensaver appears after the screensaver delay period. If there is still no operation, the system enters standby after the standby delay period.

- Press the power button and select [Standby].

■ To exit standby:

Touch the screen lightly or press the power button.

■ Under the standby status:

Exit standby status and power off the system after 5s.

NOTE:	Power off the system if the system will not be used for a long period of time (including storage/ transportation condition), and do not leave the system in standby status, otherwise the batteries will run out of power and be permanently damaged. If the system will not be used for a long period of time, you should disconnect the power adapter, disconnect the mains power, and turn off the power to all peripherals connected to the system.

3.3 Connecting the Power Cord

This system can work normally only when it is connected to the external power supply or the battery capacity is sufficient.

3.3.1 Connecting Power

1. Connect the connector of the power adapter to the adapter port in the system.
2. Use a three-wire cable to connect the adapter with the external power supply.
3. The external power supply must meet the requirements in chapter "2.3.2 Power supply".

If you have any question about the power adapter, please contact your sales representative.

NOTE:	You must use the specified power adapter. Do not use this power adapter in conditions other than those specified.

3.3.2 Powered by Batteries

- When connecting to the external power supply, the system is powered by the external power. The lithium ion batteries inside it are in the charging status.
- If disconnected from the external power supply, the system is powered by the lithium ion batteries. Refer to “Appendix B Battery” for the detailed operations and precautions.

3.4 Connecting a Probe

⚠CAUTION:	**Tap [Freeze] to freeze an image or turn off the system power before connecting or disconnecting a probe. Failure to do so may result in system or probe failure.** **When connecting or disconnecting a probe, place it in the proper position to prevent the probe from falling off or becoming damaged.** **Only use probes provided by Mindray Animal Medical. Aftermarket probes may result in damage or cause a fire.**

3.4.1 Connecting a Probe

⚠WARNING:	**The probes, cables and connectors should be in proper operating order and free from surface defects, cracks and peeling. Otherwise, this may lead to electrical shock.**

1. Keep the cable end of the transducer to the right side of the system; insert the connector into the system port, then press in fully
2. Toggle the locking lever to the left position.
3. Position the probe properly to avoid it being treaded on or becoming wrapped around other devices. DO NOT allow the probe head to hang free.

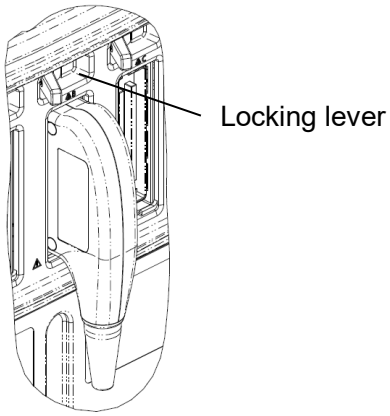

NOTE:	Before inserting the connector into the probe port, inspect the connector pin. If the pin is bent, do not use the probe until it has been inspected/repaired/replaced.

3.4.2 Disconnecting a probe

1. Turn the locking lever to the right position to unlock the connector.
2. Pull the probe connector straight out as shown in the figure below.

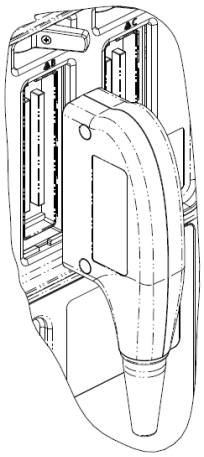

3.5 Connecting the Footswitch

The system supports USB port-type footswitches.

The function of the foot switch can be preset. See chapter "12.1.5 Footswitch" for details.

3.6 Connecting USB Devices

⚠**WARNING:**	**DO NOT directly remove a USB memory device, as the USB device and/or the system may become damaged.**

- When connecting a USB memory device to the ultrasound system via a USB port, a sound is heard if it is connected successfully and the symbol appears in the top-right corner of the screen.
- To remove the USB device: tap to open the [Remove USB Device] screen. Select the device to be removed and tap [OK]. A sound is heard when removing the USB memory device.
- The system supports option of external DVD R/W drive. The DVD R/W drive is connected to the ultrasound system via USB port.

NOTE:	If the USB flash drive cannot be recognized by the system, please try disconnecting and then connecting again several times, or try another USB flash drive. If the problem still exists, please contact Mindray Animal Medical service engineer.

3.7 Installing a Graph/Text Printer

■ Connecting a local printer

NOTE:	Printers listed in "2.4.4 Peripherals Supported" chapter have drivers installed already. If the printer driver is required, please contact Mindray Animal Medical Customer Service Department or sales representative.

As shown in the figure below, a graph / text printer has a power cord and data cable. The power cord should be directly plugged into a well-grounded outlet.

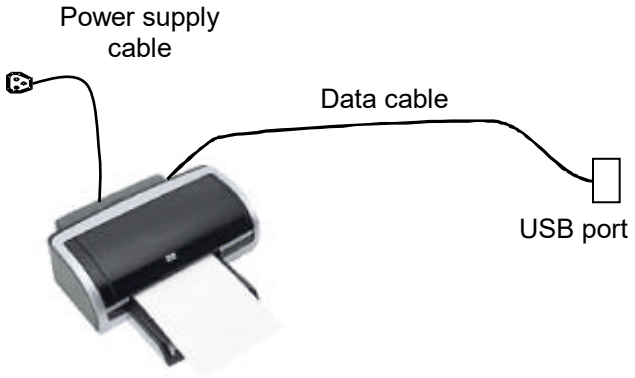

1. Connect the data cable to the USB port on the ultrasound system.
2. Power the system and the printer on.
3. Preset the default report printer and its attribute:
   (1) Enter "[System] -> [Peripheral] -> [Print Service]" screen.
   (2) Select the "Report Print" column in the Service Type list.
   (3) In the “Property” frame, select printer from the driver list next to “Printer” in the lower screen and set the items.
   (4) Tap [Save] after you have finished setting.

Tips: the system has combined many types/brands of printer drivers, if targeted printer driver is not included in the system, please contact Mindray Animal Medical Customer Service Department or sales representative.

Please refer to the accompanying manuals of the printers for details.

3.8 Installing a Video Printer

The system support video printers, consist of the B/W digital printers and color digital printers.

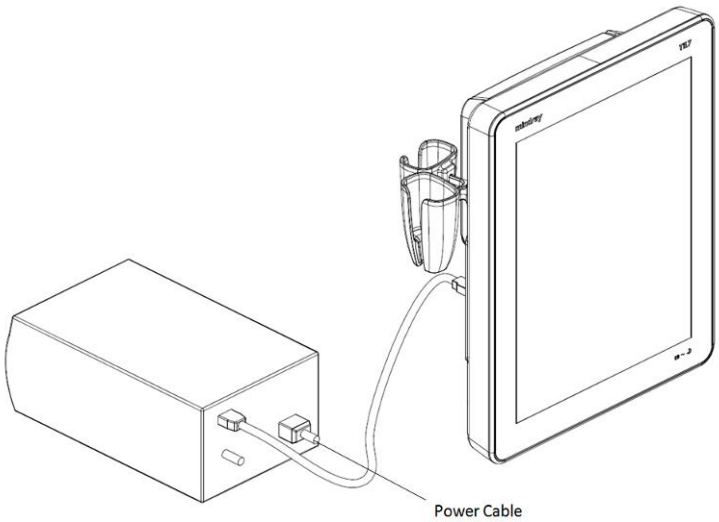

1. Position the printer in the proper place.
2. Plug the printer power cord into an appropriate outlet.
3. Use a USB cable to connect between the system's USB port and the printer's USB port.
4. Load a paper roll, and turn on the system and printer.
5. Add a print service:
   (1) Enter "[System] -> [Peripheral] -> [Print Service]" screen.
   (2) Tap [Add Service] to enter the page.

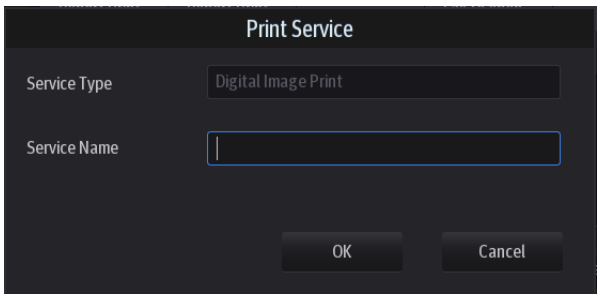

   (3) Select the service type and enter the service name manually.
   (4) Tap [OK] to return to the page.
   (5) Select the target printer from the drop-down list in the “Property” box and set other printing properties.
6. Tap [Save] to complete.

3.9 Brightness and Contrast Adjustment

1. Tap in the top-right corner of the screen to open the system tool bar.

2. Drag the slider to change the brightness/contrast on the brightness control or contrast control .

NOTE:	Avoid operating in direct sunlight or the touch screen could be obscured.

3.10 Display Position Adjustment

Gently hold the bottom edge of the display when adjusting its position.
When positioned vertically, the display can be tilted for 50°backward and 5° forward.

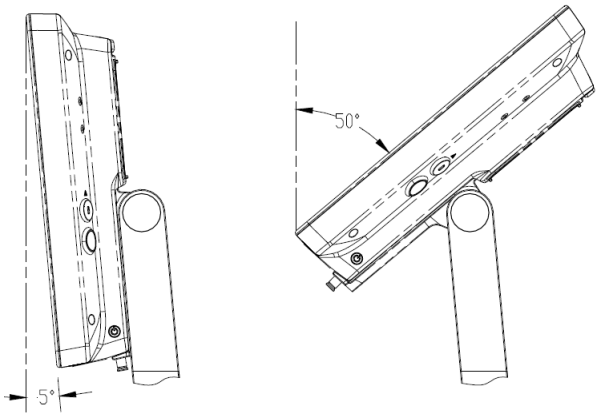

3.11 Basic Screen & Operation

3.11.1 Screen Display

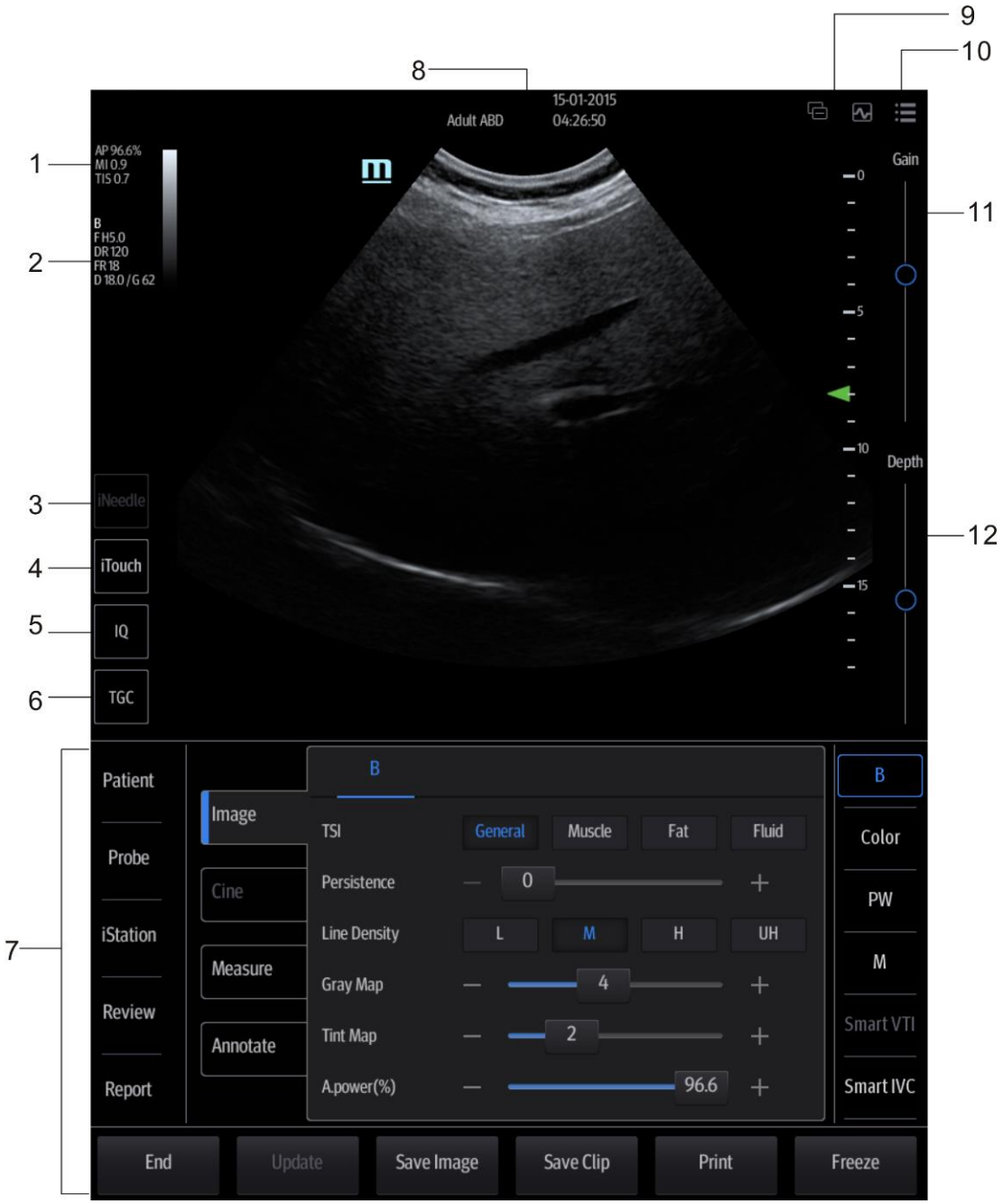

1.	Probe model, acoustic output value and MITI index	2.	Parameter area
3.	iNeedle	4.	iTouch
5.	Frequency adjustment	6.	TGC control
7.	Operating panel	8.	Animal Information area
9.	System status icon	10.	System tool bar
11.	Gain control	12.	Depth control

3.11.2 Operating panel

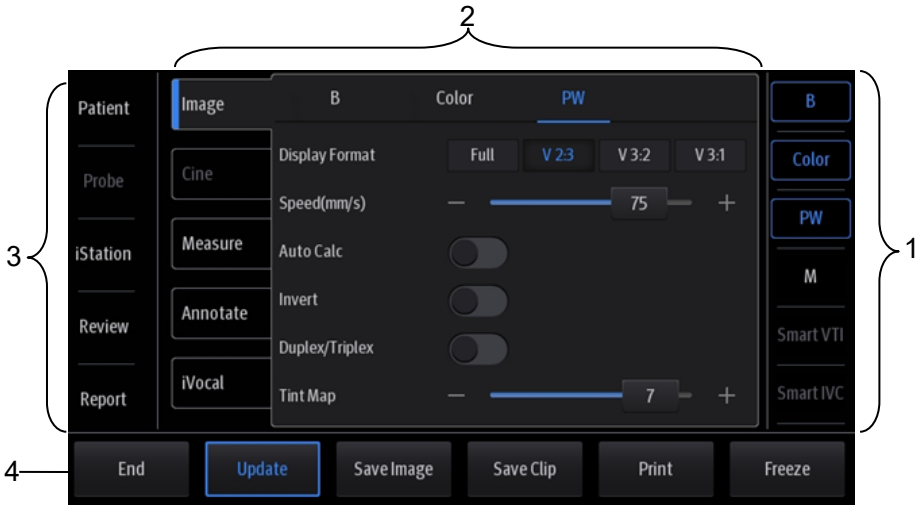

Operating panel located under the image area; consists of imaging mode buttons, menu area and exam related buttons.

1. Imaging mode area

   Tap imaging buttons to start imaging.

2. Menu area
   - Imaging parameter menu: swipe the menu downwards/upwards to see parameter controls;
   - Cine review menu (under frozen or cine review status);
   - Measurement menu;
   - Annotation and body mark menu.
   - iVocal menu

3. Exam operating area

   Tap each button to enter the screen.
   - Animal information;
   - Exam mode and probe switching;
   - iStation;
   - Image review;
   - Report review.

4. Other buttons

   You can perform operations using those buttons, including end exam, switching modes, save an image/cine, print single frame image or freeze/unfreeze image, etc.

3.11.3 iVocal

Before enabling the iVocal function, ensure that the microphone device and the ultrasound system is properly connected through the USB extension wire.

Tips: If the microphone is not to be used for the moment, you can put the microphone into the vacant probe holder temporarily.

■ Vocal command inputting procedures:

1. Tap the icon in the **Audio Control** menu to start the vocal command recognition;

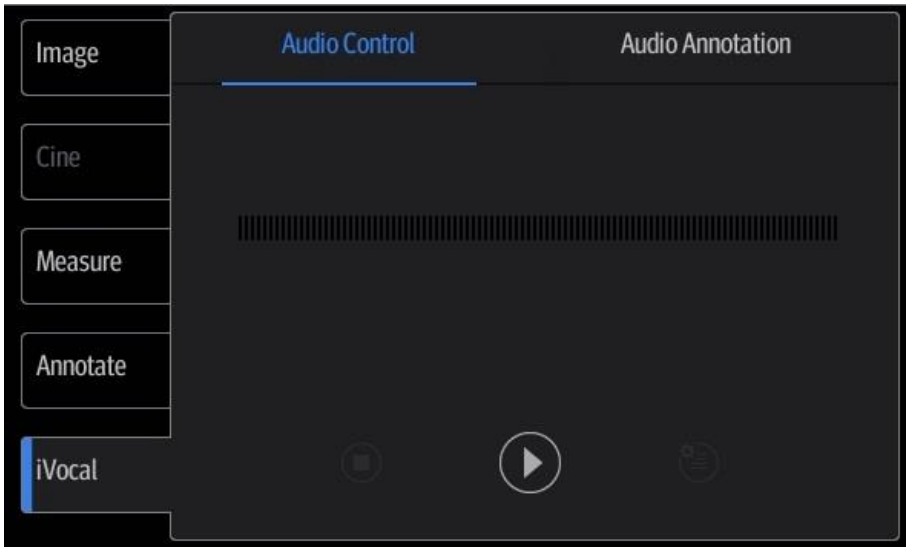

2. Input a vocal command using the microphone, and after the command is recognized, the system automatically performs the corresponding operation.

3. Tap the icon in the **Audio Control** menu to pause the vocal command recognition;

Notes:
- When the iVocal function is enabled, the system can perform operations both through inputting vocal commands and through tapping icons on the touch screen.
- The ultrasound system can automatically recognize some vocal commands. For details about the vocal commands, please refer to "17.2Appendix H List of Vocal Commands".

- Currently, only wireless microphone devices can be inserted to the system for inputting vocal commands.

4. Tap [iVocal] to exit the **Audio Control** menu.

■ Setup

Tap the icon in the **Audio Command** menu to check the system recognizable commands and enter the iVocal Setup menu.

- **Add**: tap [Add] to enter the **Adding New Command** menu, tap [Function Description] to select the desired function, enter the user-defined command in the [Command] text box, and then select **OK**.

  User-defined command naming rules: only Chinese characters, English letters, and digits are supported; the English letters are case-insensitive, consecutive blank spaces are not supported, and a maximum of 128 letters are allowed when entering the English letters; Blank spaces are not supported and a maximum of 30 characters are allowed when entering the Chinese characters; the user-defined commands cannot be empty; User defined commands that are already exited in the system but represent different functions are not supported to be added.

- **Test**: Tap [Test] and input a vocal command to the microphone device. After the vocal command is recognized, the **Success Rate** is displayed in fraction. Tap [Test] again to close the vocal command test.

Note: if the vocal command is successfully recognized by the system, both the denominator and numerator of the Success Rate are added by 1 for each time; if the vocal command fails to be recognized by the system, the denominator of the Success Rate is added by 1 for each time through tapping the icon, while the numerator remains the same. For example: 2/3 represents 2 times of success and 1 time of failure.

- **Clear**: Tap [Clear] to clear all the Success Rate test records.
- **Recover**: Tap [Recover] to enter the **Confirm** menu. You can select **Yes** to restore to the default settings.

Icon	Function
	Audition the vocal command

Icon	Function
	Delete the vocal command
	Rename the vocal command
	Add the failure time by 1
	Clear the Success Rate test record of the selected vocal command

4 Exam Preparation

An animal exam can be started under the following situations:

- New animal information: to start a new animal exam, animal information must first be entered.
- New exam: to start a new exam for animal who is already registered, the recorded information can be obtained through either iStation or Worklist. See chapter “4.1.2 Retrieve Animal Information” for details.
- Activate exam: to select an exam that has been completed, continue the exam with imported animal information and exam data.

General procedure for an exam:

Enter the animal information –>select an exam mode and probe –> Choose an imaging mode -> Start the exam.

Tips: The system supports image scanning and measurement without animal information.

4.1 Animal Information

To start a new animal exam, it is best to enter detailed animal information. The system will set up a unique information database for each animal based on the animal information entered, so that the information of one animal will not be confused with that of another animal.

⚠CAUTION:	**Before examining a new animal, tap [End] in the bottom-left corner of the operating panel to end the exam of the previous animal. Update the animal ID and information to avoid mixing data between animals.**

- To enter the Animal Info screen
  - Tap [Patient] on the left side of the operating panel.
- To exit the Animal Info screen
  - Tap [Done] on the Animal Info screen.
  - Tap [Cancel] on the Animal Info screen to exit the screen without saving any of the entered animal data.

4.1.1 New Animal Information

The Animal Info screen is shown as follows:

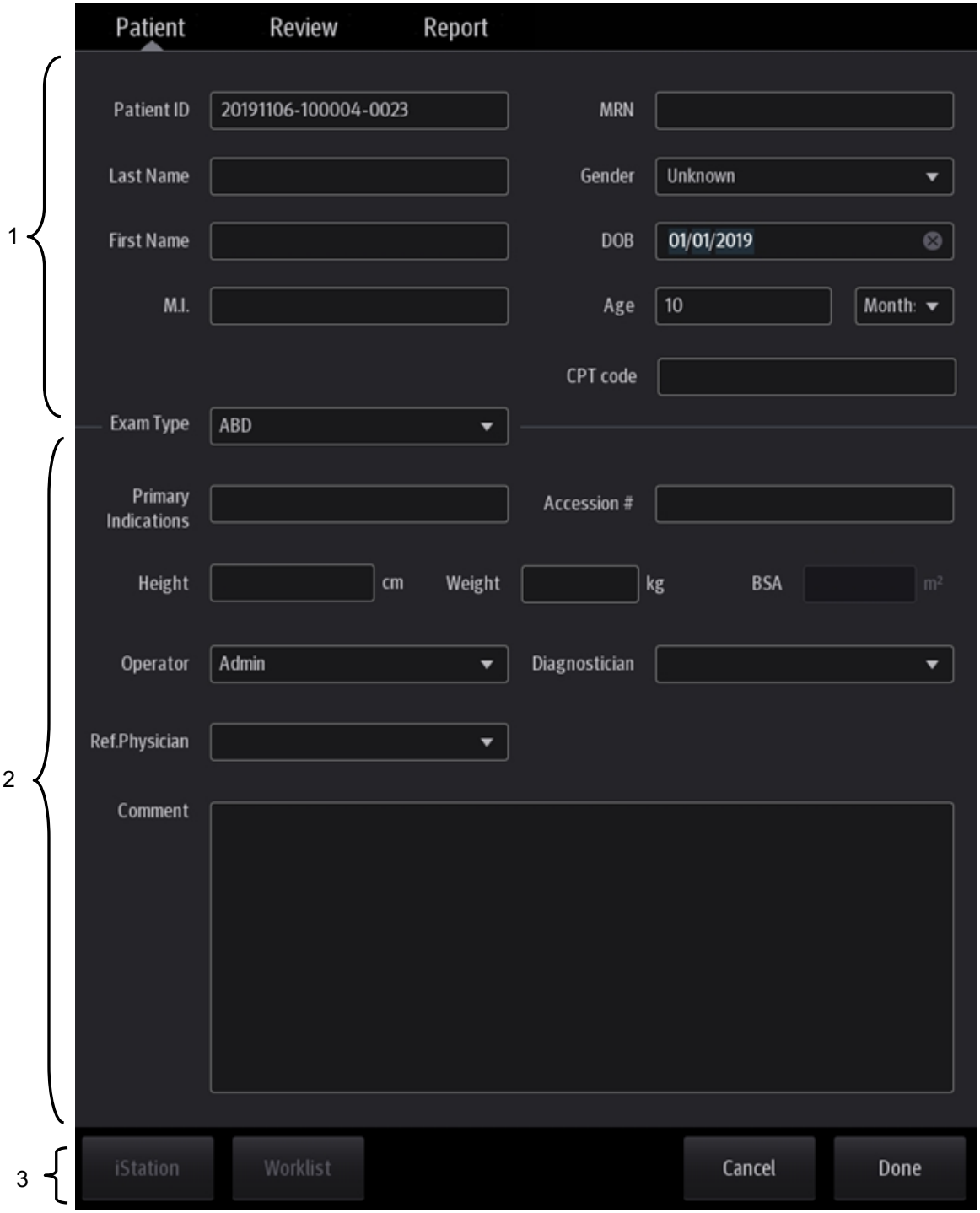

Tap to select the desired field. The field box is highlighted and a flashing cursor appears. Information can be entered or selected from the options.

Information includes:

1. General information
   - Animal ID

     The Animal ID is generated automatically by the system after starting a new animal, and can be modified manually.

     The ID can also be obtained using the bar code reader.

     Tip: you can change animal ID when there is no other exams of the current animal in the system (including the recycle bin) and the exam is the current active exam.
   - Name
   - Gender
   - DOB (date of birth):
   - Age

     Auto-generated age: once the DOB is obtained, the system displays an auto-generated age in the field box. The unit can be “Years”, “Months” or “Days.” If the age is less than one year, the system will automatically calculate the age in months or days.

     You can also enter the age manually.
2. Exam information

■ Exam application type

Select the exam type drop-down list to enter exam-specific information.

■ General information:

Primary indications:	To enter the primary indications (reason for performing the exam.)
Accession #	To enter the exam number used in DICOM.
MRN:	To enter the secondary indications.
Diagnostician:	Person responsible for the exam.
Operator:	Person responsible for image collection and scanning.
Ref. Physician:	Person who requires the operator to carry out the ultrasound.
Comment:	To enter the exam-specific explanation or remarks.

To delete history entered information:

1. Tap and hold the drop-down list of the item: Operator, Diagnostician or Ref. Physician.
2. Tap ⊗ to delete.

■ Exam-specific information:

- Select the exam type tab to enter exam-specific information.
- Input general information/operating information.

3. Functional controls:

- [iStation]/ [Worklist]: imports animal data from iStation or DICOM Worklist. See chapter “4.1.2 Retrieve Animal Information” for details.
- [Done]: saves the animal data entered and exits the screen.
- [Cancel]: cancels the animal data entered and exits the screen.

4.1.2 Retrieve Animal Information

You can import animal information from iStation or DICOM Worklist for anonymous animals.

4.1.2.1 Retrieve from iStation

Using iStation, the animal data can be obtained in iStation from the system hardware or USB memory device. You can enter search conditions for the animal.

1. In Animal screen, select [iStation] in the bottom-left corner to enter the screen.
2. Select an exam: you can either swipe the screen downwards to search or using the keyword filter.
3. The system enters the Animal screen, and the selected exam information is imported already.
4. Change the animal information if necessary and then tap [Done] to start exam.

4.1.2.2 Retrieve from Worklist

Worklist is an option. To use Worklist function, you have to configure DICOM Basic and DICOM Worklist options.

When the DICOM basic package is configured and the Worklist server has been set, tap [Worklist] in the Animal Info screen to query or import the animal data. (For details about the Worklist server setting, see chapter “11.1.3.3 DICOM Worklist Preset” chapter.)

Worklist can retrieve animal data of the following kinds of protocols: DICOM, HL7 and eGateway.

1. In Animal screen, select [Worklist] in the bottom-left corner to enter the import screen.

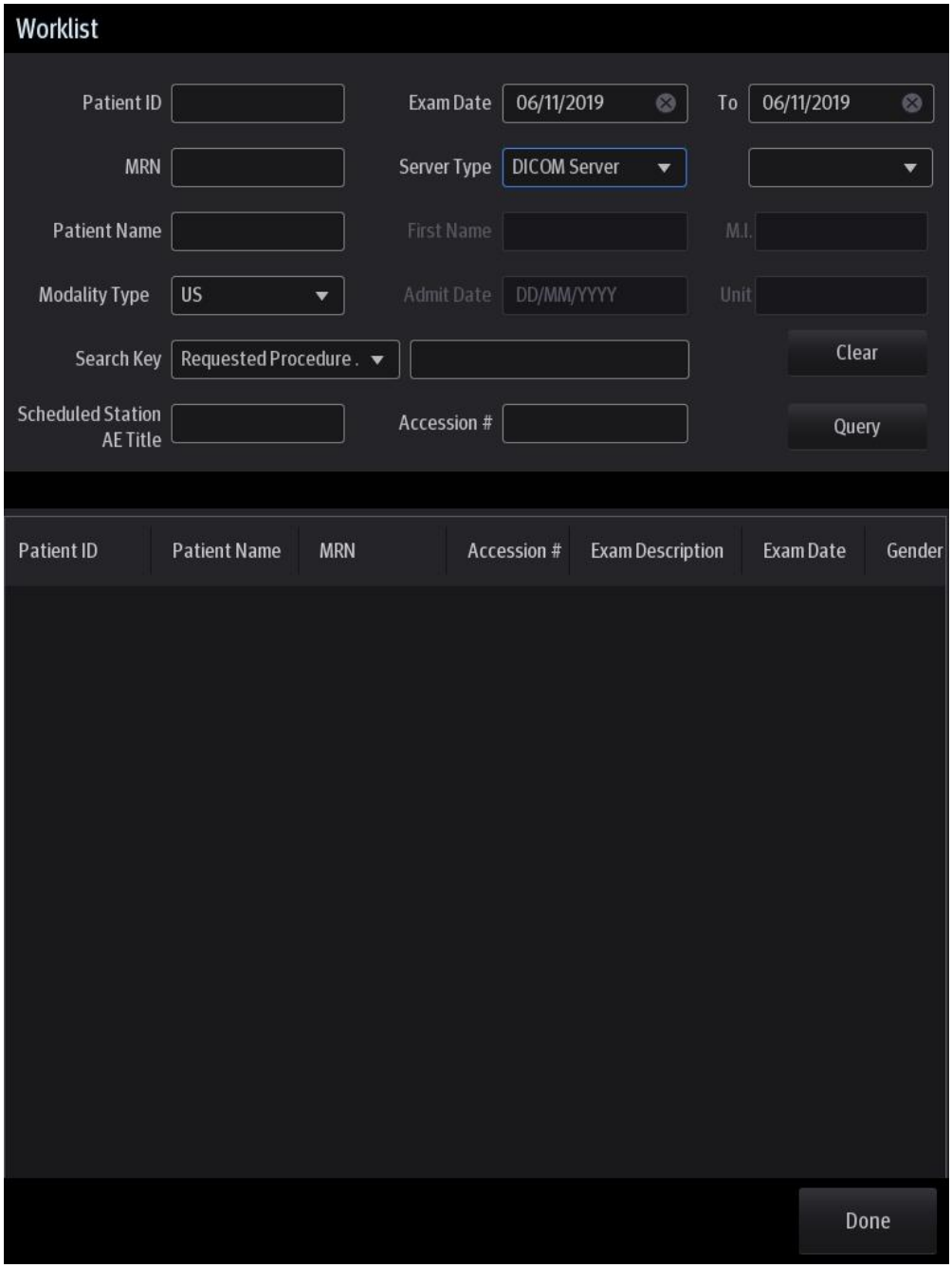

2. Select the data source: select the server type (DICOM or HL7), choose a Worklist server in the “Worklist Server” drop-down list, and all the animal exam records are listed.
3. Enter the search condition:
   - DICOM server: Search via animal ID, MRN, accession #, key words, AE title, worklist server or exam date.

- Select HL7 server: Search via animal ID, animal name.
- eGateway server: Search via animal ID, animal name, admit date, and so on.

To reset the criteria, tap [Clear].

4. Tap [Query] to search.
5. Select the desired animal record in the displayed animal list.
6. Select the desired animal and tap [Done]. The animal information is imported into the system and then an exam is started.

4.2 Select Exam Mode and Probe

⚠ **CAUTION:**	**If the exam mode is changed during a measurement, all measurement calipers on the image will be cleared. The general measurement data will be lost, but application measurement data will be stored in the reports.**

- Selecting exam mode

1. Tap [Probe] on the left side of the operating panel.
2. Tap to select the probe model and exam mode. The system exits the dialog box and enters the selected exam mode and probe.

- Tap [Exit] to cancel the selection and exit the screen.
- Tap and hold any exam mode until it floats, and then drag to change the exam mode list sequence.
- Tap [A-Z Sort] to sort exam modes by alphabetical order for each probe.

4.3 Select the Imaging Mode

Enter the imaging mode by tapping imaging buttons at the right part of the operating panel. Swipe the area to see the hidden imaging modes.

For detailed operations in each imaging mode, see chapter “5 Image Optimization.”

4.4 End an Exam

Be sure to avoid mixing data between animals.

Before examining a new animal, tap [End] in the bottom-left corner of the operating panel to end the exam of the previous animal.

4.5 Activate an Exam

On the iStation screen, select an exam record which was completed within 24 hours and select [Options] -> [Activate Exam].

Tips:

- The system can automatically load the animal information and exam data to continue the exam.
- For an activated exam, you can modify the animal ID if there are no other recorded exams of this animal (including the recycle bin) in the system.

5 Image Optimization

⚠WARNING:	**The images displayed in this system are for reference only. Mindray Animal Medical is not responsible for the correctness of diagnostic results.** **Tissue Harmonic Imaging does not use contrast agents.**

5.1 Imaging Mode

5.1.1 Switching Between Imaging Modes

On the operating panel, tap imaging mode buttons on the right to switch the mode.

Current imaging mode is indicated by highlighting the button in blue. For instance, the above status shows that the system is under B+Color+PW mode (triplex is turned on).

5.1.2 Image Adjustment

1. Tap [Image] on the operating panel to open the image parameter control menu under different imaging modes.
2. Swipe the menu downwards/upwards to check and change parameter controls.

See the following imaging chapters for details.

5.1.3 Quickly Saving Image Settings

■ Create a new exam mode using current image settings (user-defined exam mode):

1. Tap [Quick Save] in the image menu to bring out the Quick Save dialogue box.
2. Enter the name in the box after “To” to assign a name for a user-defined exam mode.
3. Tap [Save] to save the current image parameters for the user-defined exam mode.

Tip: the [Quick Save] control is available under all imaging modes.

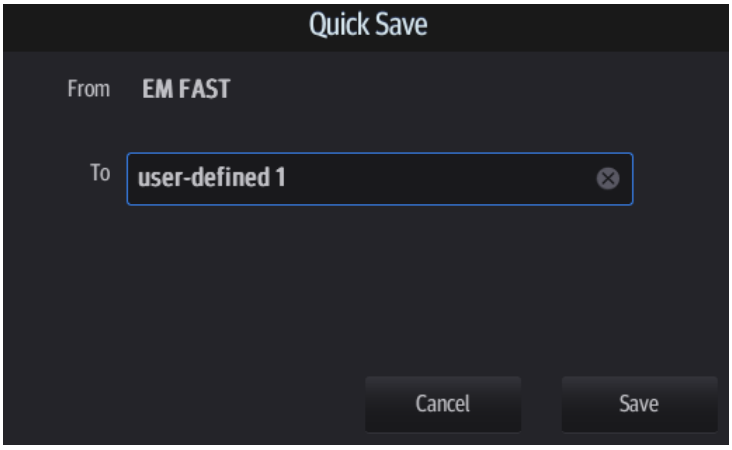

■ Check image parameter and change layout:

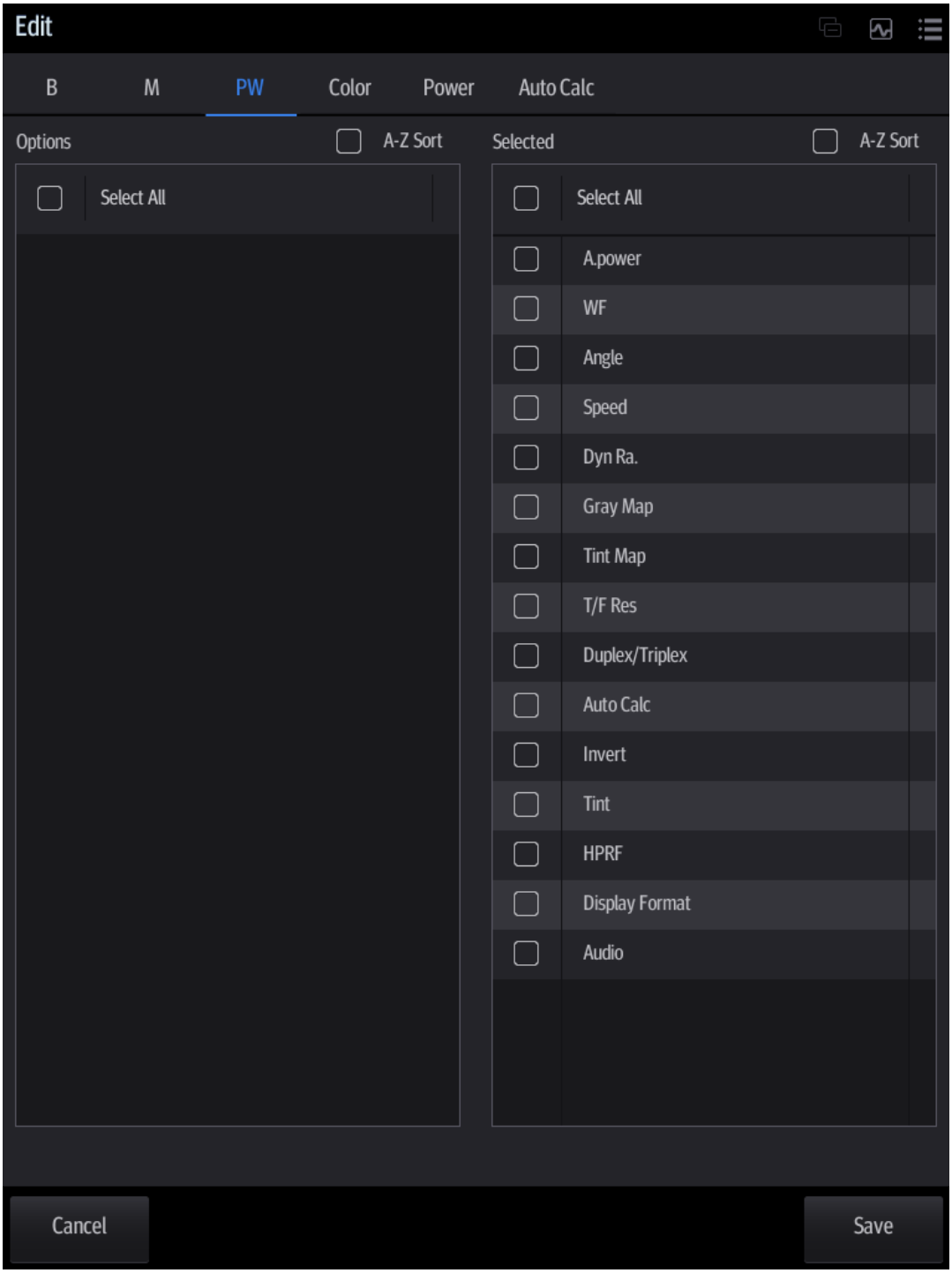

1. Tap [Edit] to enter the screen for checking the current image menu display for the current exam mode of the particular probe.
2. Tap and hold any parameter until it floats, then you can:
   - Drag upwards/downwards to change its position on the image menu;
   - Drag leftwards/rightwards to change its display on the image menu: drag it to the left “Options” list to delete its display or drag it to the right “Selected” list to display the parameter.
3. Tap [Save] to save the settings or tap [Cancel] to cancel changes you made.

Tip: the [Quick Save] and [Edit] controls are available under all imaging modes.

5.2 B Mode Image Optimization

B mode is the basic imaging mode that displays real-time images of anatomical tissues and organs.

5.2.1 Basic Procedures for B Mode Imaging

1. Enter the animal information. Select an appropriate probe and exam mode.
2. Tap [B] on the right side of the operating panel to enter B mode.
3. Tap [Image] to open the image menu. Adjust the parameters to optimize the image.
4. Perform other operations (e.g., measurement and calculation) if necessary.

Tip: tap [B] to return to B mode at any time (except LVO mode).

5.2.2 B Mode Parameters

In B mode scanning, the image parameter area in the top-left corner of the screen displays the real-time parameter values as follows:

Parameter	F	D	G	FR	DR
Meaning	Frequency	Depth	Gain	Frame Rate	Dynamic Range

5.2.3 B Mode Image Optimization

Frequency (Image Quality)

Description To switch between the fundamental frequency and harmonic frequency as well as select the corresponding frequency type. The real-time frequency value is displayed in the image parameter area in the top-left corner of the screen, and if harmonic frequency is used “F H” is displayed as the harmonic frequency value.

Select the different frequency values through IQ at the left part of the image area.

The adjusting range of the harmonic frequency values can be divided into 4 levels: penetration preferred (HPen), general mode (HGen), resolution preferred (HRes), and the mode between penetration preferred and general mode (HPen-Gen).

The adjusting range of fundamental frequency values can be divided into 3 levels: penetration preferred (Pen), general mode (Gen), and resolution preferred (Res).

Impacts The system provides an imaging mode using harmonics of echoes to optimize the image. Harmonic imaging enhances near-field resolution and reduces low-frequency and large amplitude noise, so as to improve small parts imaging.

Select the frequency according to the detection depth and current tissue features.

Gain

Description To adjust the gain of the whole receiving information in B mode. The real-time gain value is displayed in the image parameter area in the top-left corner of the screen.

Operations Drag the [Gain] control on the right part of the image area to adjust the gain.

Or, You can change gain value slightly by tapping on the gain control bar directly

Effects Increasing the gain will brighten the image and you will see more received signals. However, noise may also be increased.

Depth

Description This function is used to adjust the sampling depth, the real-time value of which is displayed in the image parameter area in the top-left corner of the screen.

Operations Drag the [Depth] control on the right part of the image area to adjust the depth.

You can change depth value slightly by tapping on the depth control bar directly.

The adjustable depth values vary depending on the probe types.

Effects Increase the depth to see tissue in deeper locations, or decrease the depth to see tissue in shallower locations.

TGC

Description	The system compensates the signals from deeper tissue by segments to optimize the image. Tap in the bottom-left corner of the image area to open the TGC adjusting dialogue box. There are 6-segment TGC sliders corresponding to the areas of the image.
Operations	To increase the gain compensation in an area of interest, drag the TGC control to the right. To decrease the gain compensation in the corresponding area of interest, drag the control to the left. Double-click any area on the dialogue box, all 6 TGC controls will return to middle state. About 1.5 seconds after the adjustment is complete, the TGC curve disappears.
Effects	Adjust the signal gain for a particular image area to achieve a balanced image.

Acoustic Power

Description	Refers to the power of ultrasonic waves transmitted by the probe, the real-time value of which is displayed in the top-left part of the screen.
Operations	Adjust through [A.Power(%)] on the menu. Tap [-] or [+] to change the value slightly or drag the control directly.
Effects	Generally, increasing the acoustic power will increase the brightness and contrast of the image and the force of penetration.
Impacts	You should perform exams according to actual situations and follow the ALARA Principle.

Focus

Description	Refers to adjusting the focus of the ultrasonic beams, using the ◀ symbols which are displayed to the right of the image.
Operations	Adjust the focus number through [Focus Number] on the menu. Tap [-] or [+] to change the value slightly or drag the control directly. Drag ◀ on the right part of the image area to change the focus position.
Effects	The area that is focused will be of a higher contrast and resolution.
Impacts	The greater the number of focal zones, the slower the frame rate.

Image Adjustment

Description	More information can be obtained without moving the probe or changing the sampling position.
FOV (Field of View)	Adjust through [FOV Size (%)] on the menu. Tap [-] or [+] to change the value slightly or drag the control directly.

	You can get a much larger field of view when selecting a larger FOV. The frame rate decreases when using a larger FOV.
B Steer	Steer the probe by tapping buttons on the bottom of the image area. 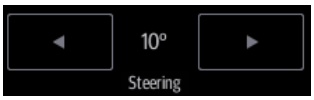
ExFOV (Extended FOV)	Adjust through [ExFOV] on the menu. Off represents no ExFOV effect. For linear probes, the ExFOV function displays as trapezoid imaging. For convex probes, the ExFOV function displays as extending the scanning angle.
Impacts	The FOV range is available only for convex and phased probes. The ExFOV function is available only for convex and phased probes. When ExFOV function is turned on, [FOV Size(%)] cannot be changed. The B Steer function is available only for linear probes.

Rotation/Invert (U/D Flip and L/R Flip)

Description	The function provides better observation for image display.
Rotation	Rotate the image using the [Rotation] control.
Invert (U/D Flip and L/R Flip)	To invert the image horizontally or vertically. Invert the image using the [L/R Flip]/[U/D Flip]control: tap [Up]/ [Down]/ [Left]/ [Right]to invert the image at different directions.
Effects	You can identify the image orientation using the “m” mark on the screen. By default, the “m” mark is located in the top-left corner of the image.

iBeam (Spatial Compound Imaging)

Description	This function is used to superimpose and average images of different steer angles to achieve image optimization.
Operations	Adjust through [iBeam] on the menu. The system provides different levels of iBeam effect. Off represents no iBeam.
Effects	Images can be optimized with less spot noise and higher resolution, so that more details for the structure are revealed.
Impacts	The adjustable iBeam levels vary depending on the probe types. iBeam is valid for linear and convex probes, but it is not available when the ExFOV function is turned on and convex probe is used.

Gray Map

Description	This function applies the gray correction to obtain optimum images.
Operations	Select maps by using [Gray Map] control.

Tint Map

Description This function provides an imaging process based on color difference rather than gray distinction.

Operations Select maps or turn on/off the function by using [Tint Map] control.

The system provides 8 different color effect maps.

iTouch (Auto Image Optimization)

Description To optimize image parameters as per the current tissue characteristics for a better image effect.

Operations

Tap

on the left part of the image area to start iTouch.

Long press

to exit.

Adjust iTouch gain value through [iTouch] control on the image menu.

H Scale

Description Display or hide the width scale (horizontal scale).

The scale of the horizontal scale is the same as that of the vertical scale (depth). They change together in zoom mode, or when the number of the image window changes. When the image is turned up/down, the H Scale will also be inverted.

Operations Select [H Scale] control to display or hide the scale.

Line Density

Description The function determines the quality and information of the image.

Operations Adjust through [Line Density] on the menu.

Effects The higher the line density, the higher the resolution.

Impacts The higher the line density, the lower the frame rate.

Dynamic Range

Description This function is used to adjust the B image resolution to compress or expand the gray display range. The real-time value displays in the image parameter area in the top-left corner of the screen.

Operations Adjust through [Dyn Ra.] on the menu.

Tap [-] or [+] to change the value slightly or drag the control directly.

Impacts The more the dynamic range, the more specific the information and the lower the contrast with more noise.

iClear

Description The function is used to enhance the image profile so as to distinguish the image boundary for optimization.

Operations	Adjust through [iClear] on the menu. Tap [-] or [+] to change the level slightly or drag the control directly. “off” represents no iClear effect, and the bigger the value the stronger the effect.
Impacts	It may cause increased noise.

Persistence

Description	This function is used to superimpose and average adjacent B images, so as to optimize the image and remove noise.
Operations	Adjust through [Persistence] on the menu. Tap [-] or [+] to change the level slightly or drag the control directly. The system provides 7 levels of frame average adjustment: the bigger the value the stronger the effect.
Effects	Persistence can remove image noise to make details clearer.
Impacts	Increasing Persistence may lead to missing signals.

TSI (Tissue Specific Imaging)

Description	The TSI function is used to optimize the image by selecting acoustic speed according to tissue characteristics.
Operations	Select different TSI modes using the [TSI] control.

Echo Boost

Description	This function can improve contrast and decrease noise, so that a much clearer boundary can be seen.
Operation	Set [Echo Boost]to be “On” to turn the function on.
Impacts	This function is only available using the phased probe in cardiac exam mode (probe P7-3Ts does not support this function)

Animal Temperature

Description	If the current active probe is P7-3Ts, the parameter will display under the B mode menu. You can enter the animal temperature by this function.
Operation	Enter the temperature by tapping [Animal Temperature].

⚠ **WARNING:**	**If the animal temperature is above 37 ° C (98.6 °F) and the [Animal Temperature] setting is below the actual reading, the system could overestimate the temperature of TEE transducer’s distal tip. This could trigger the Auto-Cool feature. If the animal temperature reaches or is near 37 °C (98.6 °F) and the [Animal Temperature] setting is above the actual reading, the system could underestimate the temperature of the TEE transducer's distal tip. The animal is exposed to excessive temperatures.**

Middle Line

Description “Middle Line” helps to locate the focus point of shockwave during the treatment. By watching the treatment procedure in real-time and adjusting the intension and frequency of the shockwave, the harm to the animals can be reduced to the least.

Operations Tap [Middle Line] on the image menu to hide or display the line.

Dual Live

Description Display different image effects of one probe for a better observation.

Operation Tap [Dual Live] to turn on/off the function, and dual-split window of images are displayed on the main screen.

Two pages of adjustable parameters are displayed; where, shared parameters and left window parameters are displayed in the B(L) page, while right window parameters are displayed in the B(R) page.

In the image parameter area on the top-left corner of the main screen, parameters of the both windows are displayed.

Impacts Image magnification is available in dual live mode.

5.3 M Mode Image Optimization

5.3.1 Basic Procedures for M Mode Imaging

1. Select a high-quality image during B mode scanning, and adjust to position the area of interest in the center of the B mode image.
2. Tap [M]on the right side of the operating panel to enter M sampling line status, and drag the sampling line to the desired position.
3. Tap [M]/ [Update] or double-click the sampling line to enter M mode. You can then observe the tissue motion along with the anatomical images of B mode. During the scanning process, you can also adjust the sampling line accordingly when necessary.
4. Adjust the image parameters to obtain optimized images.
5. Perform other operations (e.g., measurement and calculation) if necessary.

5.3.2 M Mode Image Parameters

- In M mode scanning, the image parameter area in the top-left corner of the screen displays the real-time parameter values as follows:

Parameter	F	D	G	V	DR
Meaning	Frequency	Depth	M Gain	M Speed	M Dynamic Range

- During M mode imaging, menus for B mode and M mode are displayed on the operating panel at the same time. You can switch between the 2 modes by tapping the mode tab.
- During M mode scanning, depth, focus position, frequency and acoustic power of the probe are synchronous with that of B mode.
- Adjustment of the TGC to the B mode image will lead to synchronous changes in the M mode image.

5.3.3 M Mode Image Optimization

Gain

Description To adjust the gain of M mode image. The real-time gain value is displayed in the image parameter area in the top-left corner of the screen.

Operations Drag the [Gain] control on the right part of the image area to adjust the gain.

Effects Increasing the gain will brighten the image and you will see more received signals. However, noise may also be increased.

Display Format

Description To set the display format of M mode images and B mode images.

Operations Select different layout through [Display Format].

Effects Select different format types according to the actual situation and obtain a desired analysis through comparison.

Speed

Description This function is used to set the scanning speed of M mode imaging, and the real-time speed value is displayed in the image parameter area in the top-left corner of the screen.

Operations Adjust through [Speed(mm/s)] on the menu.

Effects Changing speed makes it easier to identify disorders in cardiac cycles.

Tint Map

Description This function provides an imaging process based on color difference rather than gray distinction.

Operations Select maps or turn on/off the function by using [Tint Map] control.

Gray Map

Description This function applies the gray correction to obtain optimum images.

Operations Select maps by using [Gray Map] control.

Edge Enhance

Description This function is used to enhance the image profile so as to distinguish the image boundary for optimization.

Operations Adjust through [Edge Enhance] on the menu.

The bigger the value the stronger the effect. 0 represents no edge enhance effect.

Impacts Larger edge enhance may lead to increased noise.

Dynamic Range

Description This function is used to adjust the M image resolution to compress or expand the gray display range.

The real-time dynamic range value is displayed in the image parameter area in the top-left corner of the screen.

Operations Adjust through [Dyn Ra.] on the menu.

Tap [-] or [+] to change the value slightly or drag the control directly.

Effects The more the dynamic range, the more specified the information.

M Soften

Description This feature is used to process the scan lines of M images to reject noise, making image details clearer.

Operations Adjust through [M Soften] on the menu.

The bigger the value the stronger the effect.

5.4 Color Mode Image Optimization

The Color mode is used to detect color flow information, and the color is designed to judge the direction and speed of blood flow.

Generally, the color above the color bar indicates the flow towards the probe, while the color below the color bar indicates the flow away from the probe. The brighter the color, the faster the flow speed, while the darker the color, the slower the flow speed.

5.4.1 Basic Procedures for Color Mode Imaging

1. Select a high-quality image during B mode scanning, and adjust to position the area of interest in the center of the B mode image.
2. Tap [Color] on the right side of the operating panel to enter Color mode.
3. Change the position and size of the Region of Interest (ROI).
4. Adjust the image parameters during scanning to obtain optimized images.

   Tap [Image] to open the image menu. Adjust the parameters to optimize the image.
5. Perform other operations (e.g., measurement and calculation) if necessary.

5.4.2 Color Mode Image Parameters

- In Color mode scanning, the image parameter area in the top-left corner of the screen displays the real-time parameter values as follows:

Parameter	F	G	PRF	WF
Meaning	Frequency	Color Gain	Pulse Repetition Frequency (PRF)	Color Wall Filter

- In Color mode, the acoustic power is synchronous with that of B mode. Adjustment of the depth to the B mode image will lead to corresponding changes in Color mode image.

5.4.3 Color Mode Image Optimization

Color Gain

Description Refers to the overall sensitivity to flow signals. This function is used to adjust the gain in Color mode. The real-time gain value is displayed in the image parameter area in the top-left corner of the screen.

Operations Drag the [Gain] control on the right part of the image area to adjust the gain.

Effects Increasing the gain will increase the flow signal presented and noise. The signals may be missing when the gain is adjusted too low.

ROI Adjustment

Description This function adjusts the width and position of the ROI in Color mode.

Operations Tap the corner (green dot) of the ROI and drag to change the size.

Tap inside the ROI box and drag to change the position.

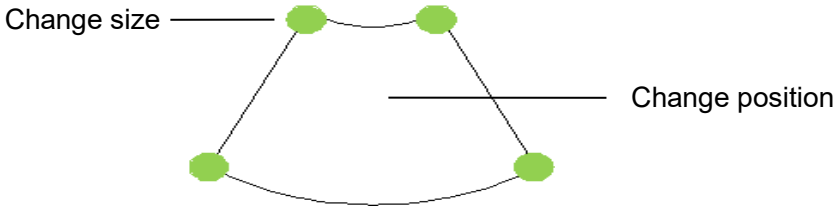

Impacts The larger the ROI box, the lower the frame rate, and the lower the resolution and color sensitivity.

Frequency (Image Quality)

Description Refers to the operating frequency of the probe in Color mode, the real-time value of which is displayed in the image parameter area in the top-left corner of the screen.

Operations

Select the different frequency values through

at the left part of the image area.

The adjusting range of frequency values can be divided into 3 levels: penetration preferred (Pen), general mode (Gen), and resolution preferred (Res).

Frequency values vary according to probe types. Select the frequency according to the needs of the detection depth and the current tissue characteristics.

B/C Align

Description To set and restrict the maximum width of the B mode image to that of the Color ROI.

Operations Turn the function on or off using the [B/C Align] control.

Impacts The frame rate increases when the function is turned on.

Steer

Description The feature is used to adjust the ROI of the color flow of different angles with immobility of the linear probe.

Operations Steer the probe by tapping buttons on the bottom of the image area.

Effects This function is used to adjust the scan angle of linear probes, so as to change the angle between the transmitting beam and flow direction.

Impacts Steer is only valid for linear probes.

Line Density

Description Line density determines the quality and information of the image.

Operations Adjust through [Line Density] on the menu.

Effects The higher the line density, the higher the resolution.

Impacts The higher the line density, the lower the frame rate.

Packet Size

Description This function is an indication of the ability to detect flow, which is used to adjust the accuracy of color flow.

Operations Select different effects through [Packet Size].

0 represents no packet size control and the bigger the value the higher the sensitivity.

Effects The higher the packet size, the more sensitive the indication for low-velocity flow.

Impacts Adjusting the packet size may lead to the frame rate changing.

Flow State

Description This function is used for fast image optimization.

Operations Select different effects through [Flow State].

Persistence

Description This function adjusts the temporal smoothing in Color mode to optimize the image.

Operations Select different effects through [Persistence].

0 represents no persistence, and the bigger the value the stronger the effect.

Smooth

Description This feature is used to reject noise and smooth the image.

Operations Adjust through [Smooth] on the menu.

The bigger the value the stronger the effect.

Scale

Description This function is used to adjust the speed range of the color flow, which is adjusted using the PRF in the system. The real-time PRF value is displayed in the image parameter area in the top-left corner of the screen.

Operations Use [Scale]to adjust PRF values.

Tap [-] or [+] to change the value slightly or drag the control directly.

Or you can pinch on the color bar on top-left corner of the screen to change the value.

The adjusting range varies according to the frequency, probe and depth. Adjust according to the actual situation.

Effects Provides a much clearer color flow image.

Use a low PRF to observe low-velocity flows, and a high PRF to observe high-velocity flows.

Impacts Aliasing may occur if a low-velocity scale is used and high velocities are encountered.

Low velocities may not be identified when a high-velocity scale is used.

Baseline

Description Refers to the area where the velocity is zero in the scale. Adjust according to the actual situation so as to get an optimum flow display.

Operations Adjust through [Baseline]on the menu.

A positive value means increase the signals above the baseline, and a negative value means increase the signals below the baseline.

Invert

Description To set the display mode of the color flow. The color scale will be inverted when the function is turned on.

Operations Turn the function on or off using the [Invert] control.

Select “Auto Invert” in [Setup] -> [System] -> [Image], so the color bar can automatically invert when the color flow is steered to a certain angle to accommodate the operator’s desire to distinguish the flow direction.

Impacts Auto invert function is available only for linear probes.

Color Map

Description This function is a combination of several image parameters, which indicates the display effect of the color image.

Operations Select maps by using [Color Map] control.

WF (Wall Filter)

Description It filters out low-velocity signals to provide effective information, and this function is used to adjust the filtered frequency. The real-time value is displayed in the image parameter area in the top-left corner of the screen.

Operations Adjust through [WF] on the menu.

Select the value according to the actual situation.

Impacts Flow signals may be missing.

Priority

Description This function is used to set the levels of the flow display and to display the grayscale signal or color signal.

Operations Adjust through [Priority (%)] on the menu.

Tap [-] or [+] to change the level slightly or drag the control directly.

The higher the value, color signals are first to be displayed. The lower the value, grayscale signals are first to be displayed.

iTouch (Auto Image Optimization)

Description To optimize image parameters as per the current tissue characteristics for a better image effect.

Operations

Tap

on the left part of the image area to get iTouch optimization.

For probes L12-4s and L12-3RCs under EM Vas, Vascular or Carotid exam mode, using iTouch can also achieve ROI optimization and auto-tracking.

Smart tracking (ROI auto position/steer in Color/PW mode)

Description To optimize image parameters as per the current tissue characteristics for a better image effect. When Smart Tracking is turned on, the system optimizes ROI angle and position automatically to achieve an active tracking by reducing the impact of animal respiratory movement.

Operation Turn on/off the function by [Smart Tracking] on the menu.

Impacts Smart tracking is available only for the following probes under EM Vas, VAS and Carotid exam mode: L12-4s, L14-6s, L14-6Ns, L16-4Hs, L14-5sp, L20-5s and L12-3RCs.

For L12-4s, under B+Color+PW mode, this feature also optimizes PW sampling line angle, SV size and position.

Dual Live

Description This function is used to display B image and Color image synchronously.

Operations Turn on or off the function through the [Dual Live] item on the menu.

When the function is turned on, the window will be automatically switched to the dual windows (one for B image, and the other for Color image).

5.5 Power Mode Image Optimization

Power mode provides a non-directional display of the blood flow in terms of intensity as opposed to flow velocity.

DirPower (Directional Power mode) provides additional information of the flow direction toward or away from the probe.

5.5.1 Basic Procedures for Power Mode Imaging

1. Select a high-quality image during B mode or B + Color scanning, and adjust to position the area of interest in the center of the image.
2. Tap [Power] on the right side of the operating panel to enter Power mode.
3. Change the size and position of the ROI (the same as in Color mode).
4. Adjust the image parameters during B + Power mode scanning to obtain optimized images.

   Tap [Image] to open the image menu. Adjust the parameters to optimize the image.
5. Perform other operations (e.g., measurement and calculation) if necessary.

5.5.2 Power Mode Image Parameters

- In Power mode scanning, the image parameter area in the top-left corner of the screen displays the real-time parameter values as follows:

Parameter	F	G	PRF	WF
Meaning	Frequency	Power Gain	Pulse Repetition Frequency (PRF)	Power Wall Filter

- In Power mode, the acoustic power is synchronous with that of B mode. Adjustment of the depth to the B mode image will lead to corresponding changes in Power mode image.

Parameters consistent with those in Color mode and B mode are not described. See the relevant Color mode and B mode sections, while special items of the Power mode are introduced in the following.

5.5.3 Power Mode Image Optimization

Power Gain

Description Refers to the overall sensitivity to flow signals. This function is used to adjust the gain in Power mode.

The real-time gain value is displayed in the image parameter area in the top-left corner of the screen.

Operations Drag the [Gain] control on the right part of the image area to adjust the gain.

Effects Increasing the gain will increase the flow signal presented and noise. The signals may be missing when the gain is adjusted too low.

Power Map

Description This feature indicates the display effect of the Power image.

Maps in the Power mode image are grouped into two categories: Power maps and Directional Power maps.

Operations Select maps by using [Color Map] control.

Maps prefixed with P belong to Power mode maps, while maps prefixed with dP belong to Directional Power mode maps.

The Power maps provide information about blood flow, which are highly sensitive to the low-velocity flows.

The Directional Power maps provide information about flow direction.

Dynamic Range

Description This function adjusts the transformation of echo intensity into color signal.

Operations Adjust dynamic range through [Dyn Ra.].

Tap [-] or [+] to change the value slightly or drag the control directly.

Effects Increasing the dynamic range leads to higher sensitivity to low-power signals, thus enhancing the range of signals to display.

5.6 PW/CW Doppler Mode

PW (Pulsed Wave Doppler) mode or CW (Continuous Wave Doppler) mode is used to provide blood flow velocity and direction utilizing a real-time spectrum display. The horizontal axis represents time, while the vertical axis represents Doppler frequency shift.

PW mode provides a function for examining flow at one specific site for its velocity, direction and features. CW mode proves to be much more sensitive to high-velocity flow display. Thus, a combination of both modes will contribute to a much more accurate analysis.

CW imaging is an option.

5.6.1 Basic Procedures for PW/CW Mode Exam

1. Select a high-quality image during B mode or B + Color (Power) mode scanning, and adjust to position the area of interest in the center of the image.
2. Tap [PW]/[CW] on the right side of the operating panel to enter PW/CW sampling line adjustment status.

   The sampling status will be displayed in the image parameter area in the top-left corner of the screen as follows:

PW Sampling Line Adjustment	SV
	Angle
	SVD
CW Sampling Line Adjustment	Angle
	CW Focus Depth

3. Set the position of the sample line by dragging the sampling line; drag the SV gate to place the SV on the target.
4. Adjust the angle and SV size according to the actual situation: drag the PW angle line to change the angle, pinch on the image area to adjust SV size.
5. Tap [PW]/[CW]/[Update] or double-click the sampling line to enter PW/CW mode and perform the examination. You can also adjust the SV size, angle and depth in real-time scanning.
6. Adjust the image parameters during PW/CW mode scanning to obtain optimized images.

   Tap [Image] to open the image menu. Adjust the parameters to optimize the image.
7. Perform other operations (e.g., measurement and calculation) if necessary.

Tap [Update] to switch between B (B+Color) and PW image.

5.6.2 PW/CW Mode Image Parameters

In PW/CW mode scanning, the image parameter area in the top-left corner of the screen displays the real-time parameter values as follows:

PW	Parameter	F	G	PRF	WF	SVD	SV	Angle
	Meaning	Frequency	Gain	PRF	Wall Filter	SV Position	SV Size	Angle
CW	Parameter	F	G	PRF	WF	SVD		Angle
	Meaning	Frequency	Gain	PRF	Wall Filter	SV Position		Angle

- When you adjust the depth of the B mode image, related changes will occur in the PW/CW mode image as well.
- Most of the parameters are the same for the PW mode and CW modes, so parameters of both are combined together to be introduced here.

Only phased probes support CW mode.

5.6.3 PW/CW Mode Image Optimization

Gain

Description This function is intended to adjust the gain of the spectrum map. The real-time gain value is displayed in the image parameter area in the top-left corner of the screen.

Operations Drag the [Gain] control on the right part of the image area to adjust the gain.

Effects Increasing the gain will brighten the image and you will see more received signals. However, noise may also be increased.

SV

Description To adjust the SV position and size of sampling in PW mode, the real-time value of SV and SVD are displayed in the image parameter area in the top-left corner of the screen.

SV size Adjust SV size by finger gesture. Use two fingers to adjust the SV size by pinching movement on the image area.

SVD Tap and drag the SV gate to change depth.

Effects The smaller the SV size, the more accurate the result. More details are obtained when selecting a large SV size.

CW Focus Position

Description To adjust the CW mode SVD. The real-time focus position value is displayed in the image parameter area in the top-left corner of the screen.

Operation Tap and drag the SV to select the focus depth.

Frequency (Image Quality)

Description Refers to the operating frequency of the probe in PW mode, the real-time value of which is displayed in the image parameter area in the top-left corner of the screen.

Operation

Select the different frequency values through

at the left part of the image area.

The adjusting range of frequency values can be divided into 3 levels: penetration preferred (Pen), general mode (Gen), and resolution preferred (Res).

Select the frequency according to the detection depth and current tissue features.

Effects The higher the frequency, the better the resolution and sensitivity, and the worse the force of penetration.

Scale

Description This function is used to adjust the speed range of the flow, which is adjusted using the PRF in the system.

The real-time PRF value is displayed in the image parameter area in the top-left corner of the screen.

Operations Use buttons on the right part of the image area to adjust PRF values.

Or you can pinch on the vertical axis of scale to change the range.

Effects Provides a much clearer color flow image.

Use a low PRF to observe low-velocity flows, and a high PRF to observe high-velocity flows.

Impacts Aliasing may occur if a low-velocity scale is used and high velocities are encountered.

Low velocities may not be identified when a high-velocity scale is used.

iTouch

Description To optimize image parameters as per the current tissue characteristics for a better image effect.

Operations

Tap

on the left part of the image area to get iTouch optimization.

For L12-4s and L12-3RCs probes under EM Vas, VAS and carotid exam modes, you can use iTouch to optimize PW sampling line automatically.

Auto-Calculation

Description This function is used to trace the spectrum and calculate the PW/CW mode image parameters. The results are displayed in the results window.

Tap [Auto Calc] to turn the auto calculation function on or off.

After auto calculation function is turned on, select “Auto Calc” tab to enter the auto calculation menu.

Auto Calculation Parameter Select parameters in the dialog box prompted by tapping [Auto Calc Param.] on the Auto Calc menu.

Auto Calculation Cycle To set the heart cycle number for auto-calculation.

Adjust through [Auto Calc Cycle] on the menu.

Trace Area To set the trace area of the Doppler wave in the spectrum map, applicable for auto calculation, V Max and V Mean display.

Adjust through [Trace Area] on the menu.

The available selections of trace area are: Above, Below, All.

Trace To set the smooth level when tracing.

Smooth	Adjust through [Trace Smooth] on the menu. There are 4 levels of smooth effect provided, the bigger the value, the higher the smooth processing.
Trace Sensitivity	This function is used to set the sensitivity of tracing in the spectrum. Adjust through [Trace Sensitivity] on the menu. The bigger the value the higher the sensitivity.
Operations	In real-time scanning, the results displayed are derived from the calculation of the latest cardiac cycle. In the freeze and cine status, the results displayed are calculated from the current selected area.

Invert

Description	This function is used to set how the spectrum is displayed.
Operations	Turn the function on or off using the [Invert] control. Select “Auto Invert” in the [Setup] -> [System] -> [Image], so the spectrum can automatically invert when the color flow is steered to a certain angle to accommodate the operator’s desire to distinguish the flow direction.

Speed

Description	This function is used to set the scanning speed of PW mode imaging.
Operations	Adjust through [Speed (mm/s)] on the menu.
Effects	Changing the speed makes it easier to identify the cardiac cycles and to detect more details.

T/F Res.

Description	This function is used to create a balance between time resolution and spatial resolution.
Operations	Adjust through [T/F Res.] on the menu.

Wall Filter

Description	It filters out low-velocity signals to provide effective information, and this function is used to adjust the filtered frequency. The real-time value is displayed in the image parameter area in the top-left corner of the screen.
Operations	Adjust through [WF] on the menu.
Impacts	Signals of low-velocity flow may be missing.

Tint Map

Description	This function provides an imaging process based on color difference rather than gray distinction.
Operations	Select maps or turn on/off the function by using [Tint Map] control.

Gray Map

Description This function applies the gray correction to obtain optimum images.

Operations Select maps by using [Gray Map] control.

Display Format

Description To set the display format of PW mode images with B mode images.

Operations Select different layout through [Display Format].

Duplex/Triplex

Description This function is used to set whether a B image (B + Color image) and PW image are displayed synchronously.

Operations Select [Duplex]/[Triplex] to turn the synchronization on or off.

HPRF

Description HPRF mode is used when detected velocities exceed the processing capabilities of the currently selected PW Doppler scale, or when the selected anatomical site is too deep for the selected PW Doppler scale.

Operations Turn the function on or off using the [HPRF] control.

Effects HPRF enhances the range for detecting high-velocity flow.

Baseline

Description Refers to the area where the velocity is zero in the spectrum.

Operations Tap and drag the green baseline on the spectrum to change the position.

Effects Changes the flow-velocity range to optimize the image.

Angle

Description	This function is used to adjust the angle between Doppler vector and flow to make the velocity more accurate. The real-time adjusting angle value is displayed on the left part of the spectrum map.
Operations	Adjust through [Angle] on the menu. Tap [-] or [+] to change the value slightly or drag the control directly.

Quick Angle

Description	To adjust the angle faster, in increments of 60°. The real-time value is displayed on the left part of the spectrum map.
Operations	Tap the three buttons above [Quick Angle] on the bottom of the image area.

Dynamic Range

Description	The dynamic range conveys the information which is being transformed from echo intensity to grayscale.
Operations	Adjust dynamic range through [Dyn Ra.]. Tap [-] or [+] to change the value slightly or drag the control directly.
Effects	The more the dynamic range, the more specific the information and the lower the contrast with more noise.

PW Volume

Description	This function is used to adjust the output audio in the spectrum map.
Operations	Adjust through [Audio] on the menu. Tap [-] or [+] to change the value slightly or drag the control directly.
Effects	Utilizing the output audio helps to identify the feature and the status of flow.

PW Steer

Description	This function is used to adjust the angles for the sampling line.
Operations	Steer the probe by tapping buttons on the bottom of the image area.
Effects	This feature is used to steer the direction of the beam so as to change the angle between the beam and flow direction with immobility of the linear probe.
Impacts	The PW Steer function is available only for linear probes.

5.7 Smart B-line

The lung acoustic impedance difference increases with the increase of lung liquids. The ultrasound waves produce strong reverberations in the lung at different depth. After multiple reflections, the comet tail sign is formed, which is perpendicular to the pleura plane. Starting from the pleura line,

the comet tail sign moves along with the lung and extends to the far field. The reverberation line perpendicular to the pleura plane is called Smart B-line.

Smart B-line is used to detect the B line of the lung in B mode. It supports B-line detecting in both real-time and freeze modes.

NOTE:	Smart B-line is only available in Single B and Dual B imaging modes. It supports single-frame and multi-frame image file detection in B mode. Smart B-line is an option.

5.7.1 Basic Procedures for Smart B-line

Perform the following procedure:

1. Select a proper probe and exam mode. The system enters the B mode by default.
2. Adjust the image parameters to obtain optimized images.

   For details about image parameter adjustment, see “5.1.2 Image Adjustment”.
3. Tap [Smart B-line] on the right side of the operating panel to enter Smart B-line mode.

   Tap to select different zone combinations for examination.
4. Select a desired zone, and tap [AutoCalc].

   The system automatically starts tracing the B line sampling area, and automatically recognizes and traces the B line in frame.

   If necessary, you can adjust the B line sampling area: Tap the dotted circle and drag the sampling line to change the position.
5. Tap [Freeze] to freeze the image.

   The system automatically calculates the quantitative index, and the calculation results are displayed on the screen.

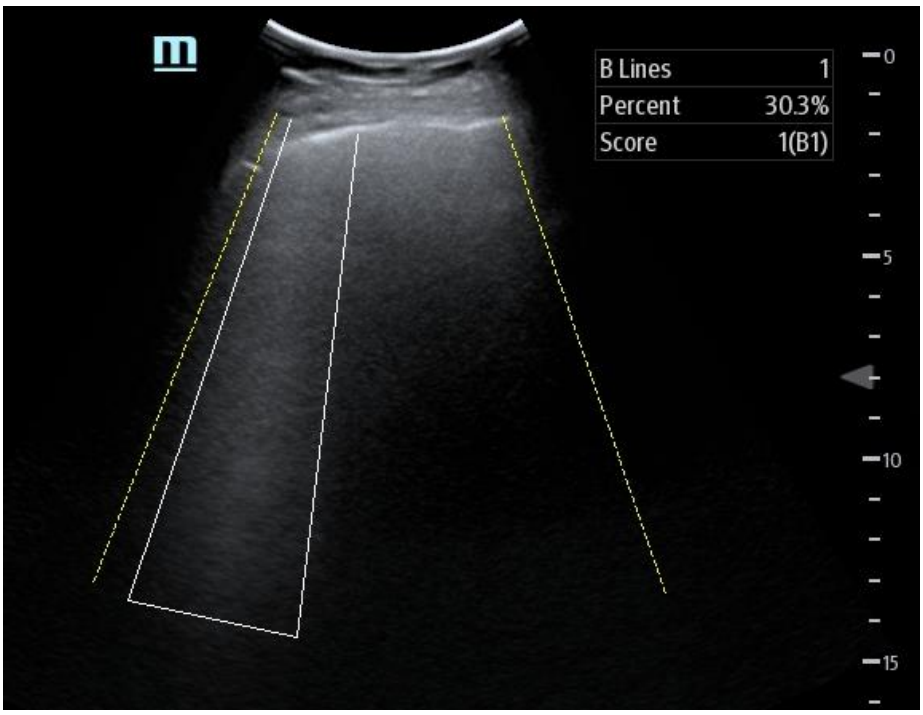

- B Lines: indicates the number of B lines of the current frame. The number can be 1, 2, 3, 4, or ≥5. When the number is equal to or greater than 5, the system does not display a specific number.
- Percent: indicates the percent of the B lines area against the total sampling area.

- Score: the score is among 0 to 3.

  Normal: when there are a lung sliding sign and A line, or isolated B lines (<3), it is marked as N in the brackets and the score is 0.

  Moderate: when there are multiple clearly-distributed B lines, it is marked as B1 in the brackets and the score is 1.

  Severe: when there are intensively fused B lines, it is marked as B2 in the brackets and the score is 2.

  Lung consolidation: when the lung has a symptom that is similar to the liver lesion structure and air bronchogram, it is marked as C in the brackets and the score is 3. When the lung consolidation and pleural effusion occur at the same time, it is marked as C/P in the brackets and the score is 3.
- Dist n (B Line distance): indicates the distance between the 2 neighboring lines and is measured in the pleura line area, among which, n corresponds to the number between the 2 B lines.
- Avg Dist (B Line average distance): indicates the average distance of all B lines.

According to the quantitative index calculated by the system, you can add image and diagnosis information. Tap the check box to select items:

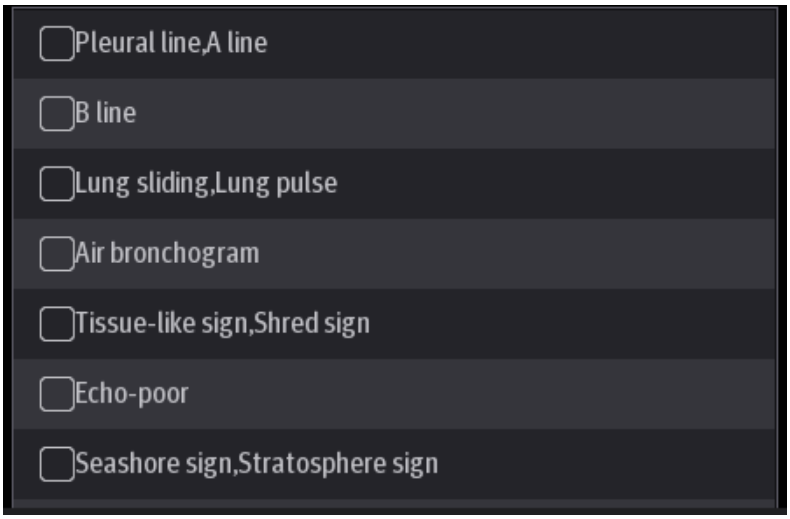

6. Tap [Save Image] at the bottom of the operating panel to save the single-frame image and B line calculation results.

   If necessary, tap [Freeze] again to unfreeze the image. Repeat steps 4-6 to finish calculating other points.

5.7.2 Overview

After capturing images, tap [Overview] to display the color map of the lung and ultrasound image of a zone. The color map uses different colors to mark the ultrasound image analysis result of every lung zone. This analysis result is calculated from the ultrasound image with the highest percent of B line area.

5.8 Smart VTI

Smart VTI (Velocity-Time Integral) is used to calculate the CO (cardiac output) of the LVOT (left ventricular output tract), so as to quickly evaluate the cardiac function.

NOTE:	The cardiac package should be configured in advance Smart VTI is an option. Smart VTI supports B mode image calculation in real time.

Perform the following procedure:

1. Select a phased probe and “Adult Cardiac” exam mode.
2. Move the probe to capture an appropriate image of the long axis view of the left ventricular near the sternum.
3. Tap [Measure] to enter the application measurement. Select [Advanced] -> [LVOT Diam] item and the measurement cursor is displayed on the screen.
   a. Tap and hold the hand icon to move the green cursor to the desired position.

   Tap the arrows around the hand icon to fine-tune the cursor position if needed.
   b. Tap the hand icon to fix the start point.
   c. Tap and hold the hand icon to move the cursor to the desired position, you can also tap the arrows around the hand icon to fine-tune the cursor position.
   d. Tap the hand icon to fix the end point.

   For more information about measurement, see [Advanced Volume].
4. Tap [Freeze] to unfreeze the image. Move the probe to capture an appropriate image of the apical five chamber view.
5. Tap [Smart VTI] on the right side of the operating panel to enter the Smart VTI mode.

   The system will:
   - Automatically trace the color VOI, and PW sampling line and sampling volume.
   - Automatically recognize the cardiac cycle: when there are ECG inputs, the ECG signals are preferred; when there are no ECG signals, the system automatically starts calculation.
   - Trace the LVOT spectrum in a cardiac cycle in real time to gain the VTI, HR, and CO results of the LVOT.
6. If necessary, adjust the color VOI, and PW sampling line and sampling volume.

   After adjustment, the LVOT spectrum tracing and calculation results display in real time.
7. Tap [Freeze] to freeze the image, and check the Smart VTI calculation results.

   If necessary, you can edit the LOVT spectrum manually:
   a. Tap [Edit VTI] on the touch screen.
   b. Move the cursor to the spectrum tracing line and tap the hand icon.
   c. Tap and hold the hand icon to trace a line.

   After tracing, the calculation results display in real time.
8. Tap [Save VTI] to save the Smart VTI calculation results of the current cardiac cycle to the database.
9. Tap [Graph] to check the quantitative index trend curve.

   VTI, SV, and CO have different trend curves and are differentiated by colors.

5.9 Smart IVC

Smart IVC is used to automatically measure the IVC inner diameter and calculate the change rate in the B mode image. Measure the IVC (Inferior Vena Cava) in real time, and the system automatically tracks and measures the changes of IVC inner diameter. It can be used to assist in treatments, such as volume estimation and fluid infusion.

NOTE:	Smart IVC is an option. Smart IVC supports calculation in both real time and freeze modes. ● Enable Smart IVC in real time. The calculation starts from the current frame and ends after the image is frozen. ● Enable Smart IVC in freeze mode or from the cine file. The calculation starts from the current frame and ends at the last frame. If the cine length is no longer than 10 seconds, it is allowed to calculate in retrospective from the current frame after the cine length reaches 10 seconds.

Perform the following procedure:

1. Select a proper probe and exam mode.
2. Move the probe to gain an appropriate IVC long axis image.
3. Tap [Smart IVC] on the right side of the operating panel to enter Smart IVC mode and start calculation.
   a. Tap to select a breath type: Spontaneous Breath or Mechanical Ventilation.
   b. Select [Chg Resp Time] > [Resp Time] to set a respiratory time.

   The system measures the IVC inner diameter of the image in every frame, calculates the maximum and minimum IVC diameters, and draws a quantitative index change curve in real time.
4. If necessary, you can adjust the IVC sampling line manually:
   a. Tap [Edit Line] on the touch screen.
   b. Adjust the angle and position of the sampling line:

      Position Adjustment: tap the dotted circle and drag the sampling line to change the position.
      Angle Adjustment: tap the dotted circle and drag along the sampling line to adjust the fulcrum of the line, and adjust the angle by rotating the sampling line.
   c. Tap [Update] to start calculating IVC again.
5. Tap [Freeze] to freeze the image and finish calculating IVC.

   The calculation results and quantitative trend curve are displayed on the screen.

   You can add diagnostic information to the image quickly by tapping the check box beside the diagnostic information item on the screen.

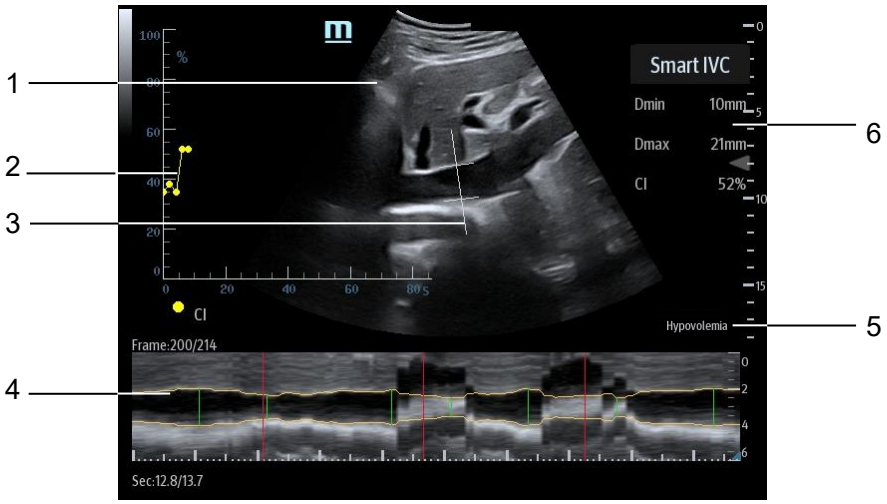

1	B Mode Image	/
2	IVC CI (Collapsibility Index), DI (Distensibility Index), IVCV trend curve	Corresponds to the selected breath type: • Spontaneous Breath: displays the CI curve. • Mechanical Ventilation: displays the DI and IVCV curve.
3	IVC Sampling Line	/
4	IVC Trending Line	The horizontal axis represents the time, which is displayed in the below Free Xros M image, and is traced along the IVC vessel wall.
5	Diagnostic Information	Displays the added diagnostic information.
6	Calculation Results Window	Displays the calculation results within the current calculation range. • Dmax: indicates the maximum IVC inner diameter within a respiratory cycle. • Dmin: indicates the minimum IVC inner diameter within a respiratory cycle. • IVC CI = (Dmax-Dmin)/Dmax • IVC DI = (Dmax-Dmin)/Dmin • IVCV = (Dmax-Dmin)/[(Dmax+Dmin)/2]

5.10 Contrast Imaging

The contrast imaging is used in conjunction with ultrasound contrast agents to enhance the imaging of blood flow and microcirculation. Injected contrast agents re-emit incident acoustic energy at a harmonic frequency which is much more efficient than the surrounding tissue. Blood containing the contrast agent stands out brightly against a dark background of normal tissue.

Contrast imaging is an option.

C5-1s and C4-1s support abdominal contrast imaging function.

Only P4-2s and SP5-1s support LVO.

⚠ **CAUTION:**	**Set MI index by instructions in the contrast agent accompanied manual.** **Read contrast agent accompanied manual carefully before using contrast function.**

NOTE:	Be sure to finish setting the parameters before injecting the agent into the animal to avoid affecting the image consistency. This is because the agent's acting time is limited. The contrast agent used must comply with the relevant local regulations.

5.10.1 Basic Procedures

To perform successful contrast imaging, start with an optimized B image and have the target region in mind. To perform contrast imaging:

1. Select the probe and the exam mode; tap [Image] to open the image menu.
2. Fix the probe.
3. Tap [Contrast] on the right side of the operating panel to enter the contrast imaging mode.
4. Adjust the acoustic power experientially to obtain a good image.

   Tap [Dual Live] to activate the dual live function. Observe the tissue image to find the target view.
5. Inject the contrast agent, and tap [Timer1] to start the contrast timing. When the timer begins to work, time will be displayed on the screen.
6. Observe the image. Use the [Pro Capture] and [Retro Capture] on the menu to save the images. Tap those controls again or tap [Freeze] to end the live capture.

   Perform several live captures if there are more than one sections of interest.
7. At the end of contrast imaging, tap [Timer 1] again to exit the timing function. Perform procedures 3-5 if necessary.

   For every single contrast imaging procedure, use [Timer 2] for timing.

   If necessary, activate the destruction function by taping [Destruct] and destruct the micro-bubbles left by the last contrast imaging, or to observe the reinfusion effect in a continuous agent injecting process.
8. Exit contrast imaging. Tap [B] to return to B mode.

5.10.2 Parameters

Parameter Area Display

When entering the imaging mode, the screen displays the contrast image. If the [Dual Live] is "ON", both the contrast image (marked with "C") and tissue image (marked with "T") are displayed (the two window positions can be changed). Parameter area displays as follows:

Type	Parameter	Meaning
Contrast	FC H	Contrast frequency
	D	Depth
	G	Gain
	FR	Frame rate
	DR	Dynamic Range
Tissue	G	Gain
	DR	Dynamic Range

Image Optimization

The parameters in Contrast mode are similar to those in B mode. See B mode imaging parameters for details. Special imaging parameters are introduced below.

Timer

The two timers are used to record the total time of the contrast imaging and the single time of one contrast exam.

After the image is frozen, Timer 1 is still running, and after unfreezing, the corresponding time can be seen.

Timer 2 stops timing when an exam is frozen, and after unfreezing, Timer 2 is off.

NOTE: The starting time displayed may be inconsistent with the actual one due to system error or some other human error. Check the agent-injecting time.

Activate [Timer 1(2)] to start timing from the moment you inject the contrast agent. The screen displays the times in the bottom-right corner.

- The time begins at 0.
- In live mode, the elapsed time is displayed. For example, 00:00:08 means the elapsed time is 8 seconds.
- If the image is frozen during timing, the timer stops working and the elapsed time is displayed.
- Turn off [Timer 1] or [Timer 2] and the timer stops running.

Micro-bubble Destruction

Function: to destroy the micro-bubbles left by the previous contrast imaging, or observe the reinfusion effect in a continuous agent injecting process.

- Entering: tap [Destruct] to enable the micro-bubble destruction function.
- Parameters: set the parameters using the menu controls.
  - [DestructAP(dB)]: adjust the destruct acoustic power.
  - [Des.Time(ms)]: adjust the destruct time.

Dual Live

In live mode or freeze mode, tap [Dual Live] to enable the dual live function. Both the contrast image (marked with "C") and the tissue image (marked with "T") are displayed (the position can be changed).

Tips:

- In dual live mode, the screen displays the contrast image and tissue image
- In freeze mode, only one cine review progress bar displays as the contrast image and tissue image are reviewed synchronously.

■ Image position

Use [CEUS Pos: XX] to adjust the position of the contrast image.

When it is selected as "Left", the image displays at the left part of the image area on the screen.

Mix Map

This function combines the contrast image with the tissue image, so that the contrast regions of interest can be located.

Select options besides [Mix] to select different mixing modes: Contrast and C&T.

- When the dual live function is on, you can see the mixed effect on the contrast image.
- When the dual live function is off, you can see the mixed effect on the full-screen image.

iTouch

In contrast status, you can also get a better image effect by using the iTouch function.

■ Tap iTouch to turn the function on (the icon turns blue).

■ Long press iTouch to exit the function.

Image Saving

■ Live capture

In live mode, you can save the images of interest by tapping [Pro Capture] and [Retro Capture].

■ Cine saving

In freeze mode, tap [Save Clip] at the bottom of the operating panel.

5.10.3 Left Ventricular Opacification(LVO)

Basic Procedures for LVO:

1. Acquire ECG signal；
2. Tap [Probe] on the touch screen to open Probe/Exam Mode selecting dialogue box;
3. Select the probe and LVO exam mode; Workflow of LVO is similar to abdomen contrast imaging.

5.10.4 Measurement, Comments and Body Marks

The system supports image measurement, comment and body mark functions. For details, see the relevant sections.

5.10.5 Contrast Imaging QA

⚠ **CAUTION:**	**Contrast Imaging QA images are provided for reference only, not for confirming a diagnosis.**

Contrast Imaging QA adopts time-intensity analysis to obtain perfusion quantification information of velocity flow. This is usually performed on both suspected tissue and normal tissue to get specific information of the suspected tissue.

1. Perform image scanning, freeze the image and select a range of images for analysis; or select a desired cine loop from the stored images.

   NOTE: in case of inaccuracy of the data, do not adjust the depth and the pan-zoom when saving the cine.
2. Tap [Contrast QA] to activate the function.
3. Mark out the interested part (ROI).

   If necessary, perform curve fitting on the time-intensity curve.
4. Analyze the parameters of the curve, or perform B measurement.
5. Save the curved image, export the data and do parameter analysis.

5.10.5.1 Contrast QA Screen

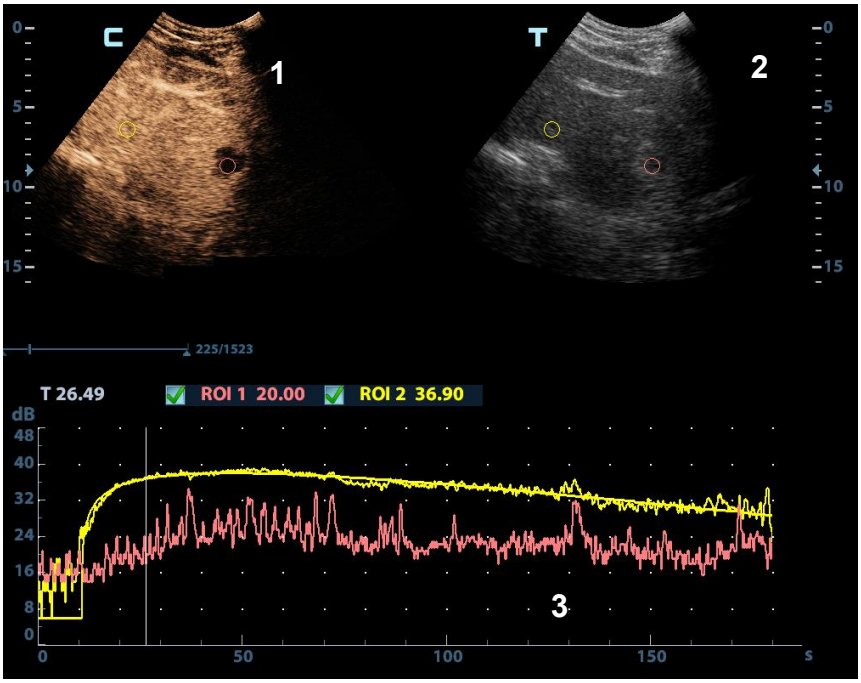

(For reference only)

1---Contrast cineloop window

Sample area: indicates sampling position of the analysis curve. The sample area is color-coded, 8 (maximum) sample areas can be indicated.

2---B Cineloop window

- Sample areas are linked in the contrast cineloop window and B cineloop window.

3---Time-intensity curve

- Y axis represents the intensity (unit: dB), while X axis represents the time (unit: s).
- Frame marker: a yellow line that is perpendicular to the X axis, can be moved horizontally left to right (right to left).
- Tap the check box beside the ROI to set if to hide or to display the QA curve.
- To get the current X/Y axis value; tap [Show Curve Value] to activate the function, and a green line is displayed. Move the green line, and the corresponding X/Y axis value is displayed.

5.10.5.2 Basic Operations of Contrast QA

QA Analysis Image Range

The system set the starting time and ending time of the cine to be first frame and last frame of QA analysis range.

Setting ROI

This function is used for setting the target.

Up to eight ROIs can be saved on the reference image, with the corresponding eight traces plotted simultaneously on the graph. Each ROI display has a different color, and its corresponding trace data is plotted using that same color.

There are two different methods for determining the shapes of the sample area: Standard ROI and Freehand ROI.

■ Trace ROI

1. Tap [Trace ROI].
2. Review the image to a desired frame.
3. Tap and hold the hand icon to move the green cursor over the reference image(s) to the desired position.

   Tap the arrows around the hand icon to fine-tune the cursor position if needed.
4. Tap the hand icon to fix the start point.
5. Tap and hold the hand icon to move the cursor to the desired position, you can also tap the arrows around the hand icon to fine-tune the cursor position.
6. Tap the hand icon to fix the second point.
7. Repeat steps 5~6 above to fix more points.
8. When a suitable ROI has been drawn, confirm the ROI by double tapping the hand icon.

   The system automatically links the start point to the end point by drawing a line between them.

■ Ellipse ROI

1. Tap [Ellipse ROI].
2. Review the image to a desired frame.
3. Tap and hold the hand icon to move the green cursor over the reference image(s) to the desired position.

   Tap the arrows around the hand icon to fine-tune the cursor position if needed.
4. Tap the hand icon to fix the start point.
5. Tap and hold the hand icon to move the cursor to the desired position, you can also tap the arrows around the hand icon to fine-tune the cursor position.
6. Tap the hand icon to fix the end point.
7. Tap and hold the hand icon to depict the ROI.

   Tap the arrows around the hand icon to fine-tune the cursor position if needed.
8. When a suitable ROI has been drawn, confirm the ROI by double tapping the hand icon.

   The system automatically links the start point to the end point by drawing a line between them.

■ Delete ROI

Tap [Delete All] to clear out all ROIs.

The corresponding traces for the deleted ROIs are erased from the plot.

■ Copy ROI

Tap [Copy ROI] to create a new ROI similar to the current or latest added ROI.

Motion Tracking

Tap [Motion Tracking] to enable the function.

This function provides a motion compensated ROI as precise time-intensity information can be acquired using active tracking. It can enhance the calculation accuracy as reducing the impact of probe or animal respiratory movement.

Tips: Elliptical ROIs can be positioned in any manner that keeps their center within the image boundaries. In the case that part of the ROI is outside the image boundary, only data from within the image boundary is used for calculating the mean intensity value.

X Scale

Select [X Scale] to choose different value, so that the X scale display manner will be changed. This function can be used to track detailed tissue information.

Export/Save Trace Data

1. Tap [Export].
2. Select the drive and enter the file name in the displayed window.
3. Select [OK] to save the data and return to the QA Analysis screen.
   - All displayed ROI traces are saved in the exported file.
   - The parameters are included in the trace file if the user has fixed a ROI.
   - Only data from the user selected image range is included in the exported trace file.

Curve Fitting

The system can calculate characteristic parameters according to curve fitting formula and data, display fit curve for time-intensity curve, and perform data analysis on time-intensity curve for data table.

- Tap [Fit Curve] on the touch screen to turn on the function, where color of the fitted curve is consistent with color of the current ROI curve.
- Tap [Raw Curve] to hide/display raw curve.
- Tap [Table Display] to check parameters.

Parameters calculated include the following:

- GOF (Goodness of Fit): to calculate the fit degree of the curve; range: 0-1, where 1 means the fit curve fits the raw curve perfectly.
- BI (Base Intensity): basic intensity of no contrast agent perfusion status.
- AT (Arrival Time): time point where contrast intensity appears, generally, the actual time value is 110% higher than the base intensity.
- TTP (Time To Peak): time when the contrast intensity reaches peak value.
- PI (Peak Intensity): contrast peak intensity.
- AS (Ascending Slope): ascending slope of contrast, the slope between the start point of lesion perfusion to the peak.
- DT/2: time when the intensity is half the value of the peak intensity.
- DS (Descending Slope): descending slope of the curve.
- AUC (Area Under Curve): to calculate the area under the time-intensity curves during contrast.

NOTE:	If the contrast signal inside the selected ROI does not meet the requirements of gamma fitting condition, that is the bulleting injection, curve fitting may not be available.

5.11 Anatomical M Mode

⚠CAUTION:	**Anatomical M images are provided for reference only, not for confirming a diagnosis. Please compare the image with that of other machines, or make diagnosis using none-ultrasound methods.**

5.11.1 Free Xros M Mode

For an image in the traditional M mode, the M-mark line goes along the beams transmitted from the probe. Thus it is difficult to obtain a good plane for difficult-to-image animals that cannot be moved easily. However, in the anatomical M mode, you can manipulate the M-mark line to move to any position at desired angles. The system supports anatomical M scanning in 2D imaging modes (B, Color, Power and TVI mode).

5.11.1.1 Imaging

- Real-time Imaging

1. In real-time B mode or M mode, adjust the probe and image to obtain the desired plane.
2. Tap [Free Xros M] on the right side of the operating panel to enter Free Xros M mode.
3. Adjust the M-mark line to obtain optimized images and necessary information.

- Imaging in Freeze Mode

1. Open Free Xros M imaging of images in cine memory, tap [Free Xros M].
2. Adjust the M-mark line and image parameters to obtain optimized images and necessary information.

5.11.1.2 Free Xros M Image Parameters

- In Free Xros M mode imaging, the image parameter area in the upper left corner of the screen displays the real-time parameter values as follows:

Display	V
Parameter	Free Xros M Speed

- During Free Xros M mode imaging, menus for B mode, Free Xros M mode and other modes are displayed at the same time, tap mode tabs to switch the menus.
- Parameters consistent with those in M mode are not to be introduced, please refer to relevant section of the M mode, while special items of the Free Xros M mode will be introduced in the following.

Adjustment of the M-mark Line

Description To adjust the position and angle of the M-mark line.

Operation

- Position Adjustment

When the M-mark line is activated, tap the dotted circle and drag the sampling line to change the position. The direction is recognized by the arrow at the end of the line.

- Angle Adjustment

When the M-mark line is activated, tap the dotted circle and drag along the sampling line to adjust the fulcrum of the line, and adjust the angle by rotating the sampling line.

Display Format

Description This function is to adjust the display of the image.

Operation Adjust through the [Display Format] item in the menu.

5.11.1.3 Exit

- In Free Xros M mode, tap [Free Xros M] or [B] to exit.

5.12 iScape View (Real-time Panoramic Imaging)

The iScape panoramic imaging feature extends your field of view by piecing together multiple B images into a single, extended B image. Use this feature, for example, to view a complete hand or thyroid.

When scanning, move the probe linearly and acquire a series of B images. The system pieces these images together into a single, extended B image in real time. The system also supports out-and-back image piecing.

After obtaining the extended image, you can rotate it, move it linearly, magnify it, add comments or body marks, or perform measurements on the extended image.

CAUTION:	**iScape panoramic imaging constructs an extended image from individual image frames. The quality of the resulting image is user-dependent and requires operator skill and additional practice to become fully proficient. Therefore, the measurement results can be inaccurate. Exercise caution when you perform measurements in iScape mode. A smooth and even speed will help produce optimal image results.** **iScape images are provided for reference only, not for confirming diagnoses.**

- iScape is an option.
- Displaying the biopsy guideline is not allowed in iScape mode.

5.12.1 Basic Procedures for iScape Imaging

To perform iScape imaging:

1. Connect an appropriate iScape-compatible probe. Make sure there is enough coupling gel along the scan path.
2. Tap [iScape].
3. Optimize the B mode image.

   In the acquisition preparation status, tap [B] on the imaging parameter menu to optimize the B mode image. Perform measurement or add comments/body marks to the image if necessary.
4. Image acquisition.

   Tap [Capture] on the imaging parameter menu, and then tap [Start Capture] or [Update] to begin the acquisition.

   Tap [Stop Capture] to stop the acquisition. The system enters image viewing status when the acquisition is completed. You can perform operations such as parameter adjusting.
5. Exit iScape.

   Tap [Unfreeze], [Update] or [ReCapture] to return to B mode.

5.12.2 Image Acquisition

To create an iScape image, start with an optimized 2D (color) image. The 2D image serves as the mid-line for the resulting iScape image.

1. Tap [Start Capture] or [Update] to start the iScape image capture.
2. Scan slowly to obtain a single extended field of view image. You can also erase and retrace if the image is not satisfactory.
3. End image capture:

   To end the image capture:

   - Tap [Stop Capture], or,
   - Tap [Update], or,
   - Tap [Freeze], or,
   - Wait until the acquisition completes automatically.

   After the acquisition is completed, the panoramic image will be displayed and the system enters iScape viewing mode.

Tip:

- During image acquisition, none of the parameters are adjustable, and functions such as measurement, comments and body marks are not available.
- ROI: a green box on the image indicating the boundary between the merged images and the unfinished images.
- Tip on the probe speed: During image slicing, the system gives feedback on the probe's moving speed in the form of colors and words. The meanings are as follows:

Status	ROI Color	Tip
Speed too low	Blue	Moving speed of the probe is too low.
Appropriate	Green	None.
Speed too high	Red	Moving speed of the probe is too high.

Guidance and precautions for even movement:

- Make sure there is enough coupling gel along the scan path.
- Always move the probe slowly and steadily.
- Continuous contact is required throughout the length of the extended image. Do not lift the probe from the skin's surface.
- Always keep the probe perpendicular to the skin's surface. Do not rock, rotate or tilt the probe during the scan.
- The system accommodates a reasonable range of motion velocity. Do not make abrupt changes in motion speed.
- Deeper scans generally require reduced acquisition speed.

5.12.3 iScape Viewing

After completing image acquisition, the system performs image splicing and then enters the iScape viewing mode.

In iScape viewing mode, you can perform image parameters setting, zooming, rotation and adding measurements, comments and body marks.

Adjusting Image Parameters

In image viewing mode, you can adjust the following parameters:

- Image size

  Tap [Actual Size] to display the image in its actual size.

  Tap [Fit Size] to display the image in a size that fits the current window.

- Tint map

  Tap [-] or [+] to change the value slightly or drag the control directly.

- Ruler

  Tap[Ruler] to hide or show the ruler around the image.

- Rotation

  Tap [-] or [+] to rotate the image clockwise or anticlockwise, or drag the control directly.

Image Zooming

For details, refer to “6.2 Image Magnification”.

Measurement, Comments and Body Marks

In iScape image viewing status, you can perform measurement, comments and body marks. The operations are the same as in B mode.

NOTE:	The measurement accuracy for spliced images may be degraded - exercise caution when measurements are performed on an iScape image. If there is a trace during the retracing, do not perform measurement across the trace.

Evaluate Image Quality

Many variables may affect the overall image quality. It is important to evaluate the image content and quality before an image is used for diagnosis or measurements.

NOTE:	iScape panoramic imaging is intended for use by well-trained ultrasound operators or physicians. The operator must recognize image items that will produce a sub-optimal or unreliable image.

The following items may produce a sub-optimal image. If the image quality does not meet the following criteria, you must delete the image and repeat image acquisition.

- The image must be continuous (no part of an image moves suddenly or disappears.)
- No shadow or absent signal along the scan plane.
- Clear profile of anatomy through the entire scan plane without distortion.
- Skin line is continuous.
- The images are captured from the same plane.
- There are no large black areas in the image.

5.12.4 Cine Review

Tap [Review Cine] on the soft menu in panoramic image viewing status to enter cine reviewing mode. In cine reviewing mode, a green frame marker indicates the sequence of the currently reviewed images in the panoramic image on the left-hand side of screen.

In cine review status:

- Drag the playback mark to the left to display the earlier stored images; drag the playback mark to the right to display the recently stored images. Or, swipe the image area to the right to display the earlier stored images; swipe the image area to the left to display the recently stored images..
- In manual cine review status, tap to activate auto cine review.
- Review speed: in auto cine review status, tap to select different speeds: 1/10x,1/5x,1/4x,1/2x,1x.
- Set first frame: drag to the frame as start point. Set end frame: drag to the frame as end point. Tap to start auto play, and the review region is confined to the set start point and end point.
- Tap [Overview] to exit cine review mode. The panoramic image is displayed.
- In cine review mode, tap [UnFreeze] to return to the acquisition preparation status.

5.13 TDI

TDI mode is intended to provide information of low-velocity tissue motion, specifically for cardiac movement.

There are 4 types of TDI mode:

- Tissue Velocity Imaging (TVI): This imaging mode is used to detect tissue movement with direction and speed information.
- Tissue Energy Imaging (TEI): This imaging mode reflects the status of cardiac movement by displaying the intensity of tissue, the brighter the color the less the intensity.
- Tissue Velocity Doppler Imaging (TVD): This imaging mode provides direction and speed information of the tissue quantificationally with doppler spectrum.
- Tissue Velocity M Imaging (TVM): This function assists to observe the cardiac motion through a direct angle. TVM mode is also called Color Tissue M mode, refer to "5.14 Color M Mode" for details.

■ Only phased probe is valid for TDI function.

5.13.1 TDI Exam Protocol

■ In real-time mode, tap [TDI] on the right side of the operating panel to enter the corresponding TDI mode as follows:

- In B or B+Color mode, tap to enter TVI mode.
- In Power mode, tap to enter TEI mode.
- In PW mode, tap to enter TVD sampling line adjustment status.
- In M mode, tap to enter TVM sampling line adjustment status.

■ Switching between the TDI modes

In TDI mode, tap [Color], [Power], [M] or [PW] to switch between the modes.

■ Exit TDI

- Tap [TDI] to exit TDI mode and enter general imaging modes.
- Or, tap [B] to return to B mode directly.

5.13.2 TDI Image Parameters

- In TDI mode scanning, the image parameter area in the top-left corner of the screen will display the real-time parameter values as follows:
  - TVI/ TEI

Display	F	G	PRF	WF
Parameter	Frequency	Gain	PRF	WF (Wall Filter)

  - TVD

Display	F	G	PRF	WF	SVD	SV
Parameter	Frequency	Gain	PRF	WF (Wall Filter)	SV Position	SV Size

  - TVM

    Image parameters combine the parameters of TVI mode and M mode.

5.13.3 TDI Image Optimization

- In TVM mode, adjustable parameters are the same as those in B, M, and TVI modes; please refer to the relevant contents for details.
- In each TDI mode, parameters that can be adjusted are similar to those in the color flow modes (Color, PW, and Power); please refer to relevant chapters for details. The following is to introduce the specific items in TDI mode.

Tissue State

Description	This function is used for a fast image optimization by providing an adjustment on 2 parameters, including scale and filter.
Operation	Adjust through the [Tissue State] item in the menu.

5.14 Color M Mode

Color M mode provides information of color flow or tissue movement on the M mode images to indicate cardiac motion state. It is highly sensitive to the flow or tissue movement.

The Color M mode includes Color Flow M mode and Color Tissue M mode (also known as TVM).

5.14.1 Enter Color M Mode

- Color Flow M mode
  - In B+M Mode, tap[Color].
  - In B+Color, B+ Color+ PW or B+ Color+ CW mode, tap[M].
- Color Tissue M mode(TVM)
  - In B+TVI/TVD, or B+TVI+TVD mode, tap[M].
  - In Color Flow M mode, tap [TDI] on the right side of the operating panel.

5.14.2 Exit Color M Mode

- Tap[Color] or [M] to exit Color M mode.
- Or, tap[B] to return to B mode directly.

5.14.3 Image Parameters

- In Color Flow M mode, parameters that can be adjusted are in accordance with those in B, M and Color modes; please refer to relevant sections of B, Color and M mode for details.
- In Color Tissue M mode, parameters that can be adjusted are in accordance with those in B, M and TVI modes; please refer to relevant sections of B, Color and TVI modes for details.
- In Color M mode scanning, the image parameter area in the top-left part of the screen will display the real-time parameter values.
- ROI Adjustment

The ROI size and position determine the size and position of the color flow or color tissue displayed in the Color M mode image.

  - Tap the corner (green dot) of the ROI and drag to change the ROI size.
  - Tap inside the ROI box and drag to change the ROI position.
- Tap mode tabs in the image menu to switch between current activated modes. For example, tap [Color] in the image menu to activate Color ROI adjusting status.

5.15 3D Imaging

NOTE:	3D imaging is largely environment-dependent, so the images obtained are provided for reference only, not for confirming diagnoses.

5.15.1 Overview

Ultrasound data based on three-dimensional imaging methods can be used to image any structure where a view cannot be achieved with the standard 2D-mode and to improve the understanding of complex structures.

■ Terms

- 3D image Volume Rendering (VR): the image displayed to represent the volume data.
- View point: a position for viewing volume data/3D image.
- MultiPlaner Rendering (MPR): the three sectional planes of the volume acquisition. As shown in the figure below, the XY-paralleled plane is the C-section, the XZ-paralleled plane is the B-section, and the YZ-paralleled plane is the A-section. The probe is moved along the X-axis.
- ROI (Region of Interest): a volume box used to determine the height and width of scanning volume.
- VOI (Volume of Interest): a volume box used to display the 3D image (VR) by adjusting the region of interest in MPR.

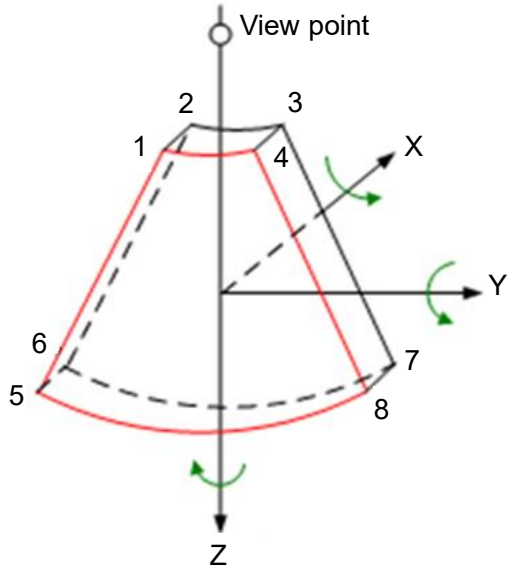

■ ROI and VOI

After the system enters 3D imaging, a B image with ROI displays on the screen. A line (shown in the following figure) shows that the upper edge position of the VOI is inside the ROI.

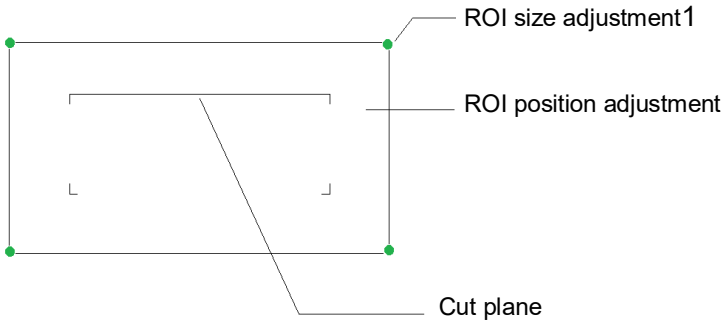

- ROI size and position

  Tap the corner (green dot) of the ROI and drag to change the size.

  Tap inside the ROI box and drag to change the position.

- Curved VOI adjustment

  Tap the cut plane and drag to change the curved VOI position. This function changes the curved shape of the nearest VOI section and facilitates observation of the volume data of interest.

  The orientation and shape (line or dot) of curved VOI vary depending on the view direction:

View	Curved VOI
U/D	At the upper part of curved VOI
D/U	At the lower part of curved VOI
L/R	At the left part of curved VOI
R/L	At the right part of curved VOI
F/B	Displays as a dot
B/F	Displays as a dot

■ MPR

The principle of 3D imaging is to render a 3D image from multiple 2D image information. The following describes the spatial relationship of 3 MPRs (A, B and C) and the 3D image (VR).

In the quad display format view, the screen displays 3 MPRs (A, B and C) and the 3D image.

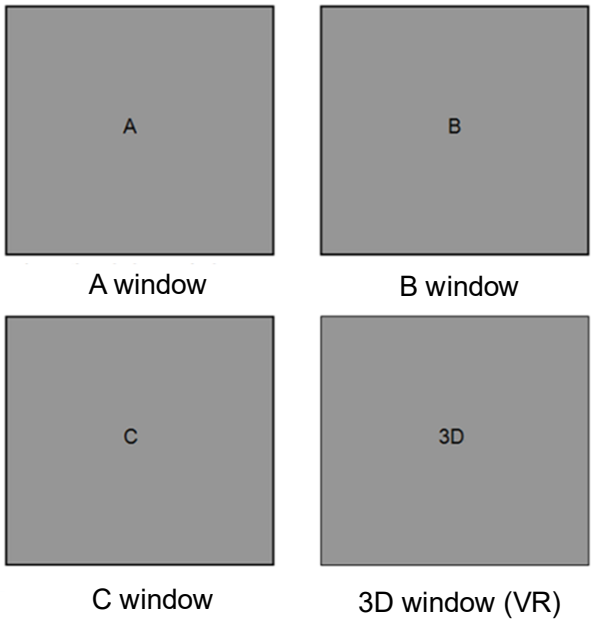

A, B and C sectional images correspond to the following sections of the 3D image.

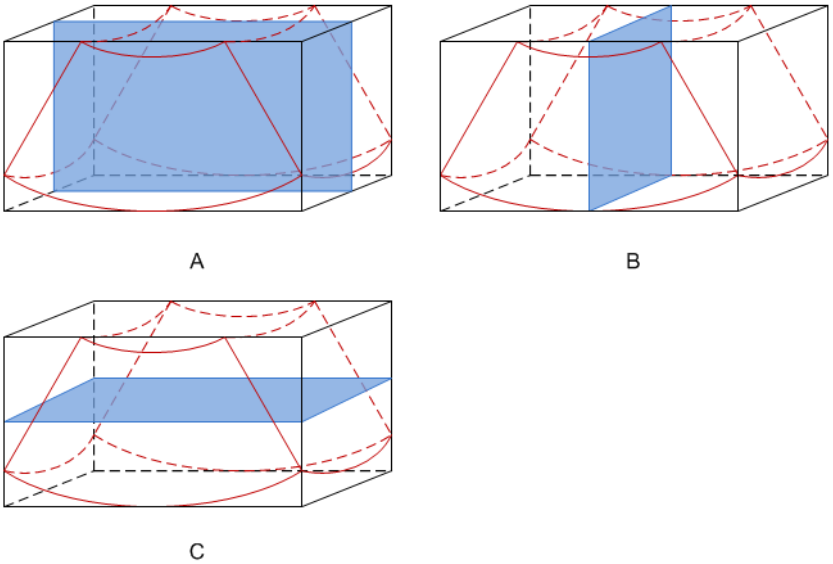

- Section A: corresponds to the 2D image in B mode. Section A is the sagittal section, as shown in Figure A above.
- Section B: is the horizontal section, as shown in Figure B above.
- Section C: is the coronal section, as shown in Figure C above.

⚠ **CAUTION:**	**Ultrasound images are provided for reference only, not for confirming diagnoses. Use caution to avoid misdiagnosis.**

NOTE:	In accordance with the ALARA (As Low As Reasonably Achievable) principle, try to shorten the sweeping time after a good 3D image is obtained.

5.15.2 Smart 3D

The operator manually moves the probe to change its position/angle when performing the scan. After scanning, the system carries out image rendering automatically, then displays a frame of the 3D image.

Smart 3D is an option.

Linear probes support Smart 3D imaging.

NOTE:	In Smart 3D image scanning, if the probe orientation mark is oriented to the operator's finger, perform the scan from right to left in linear scan, or rotate the probe from left to right in rocked scanning. Otherwise, the VR direction will be wrong.

5.15.2.1 Basic Procedures for Smart 3D Imaging

To perform Smart 3D imaging:

1. Select the appropriate probe and exam mode. Make sure there is sufficient gel on the probe for scanning.
2. Obtain a 2D image.
3. Tap [Smart 3D] on the right side of the operating panel to enter Smart 3D acquisition preparation mode, and define the ROI as well as the curved VOI.

   To adjust the ROI:

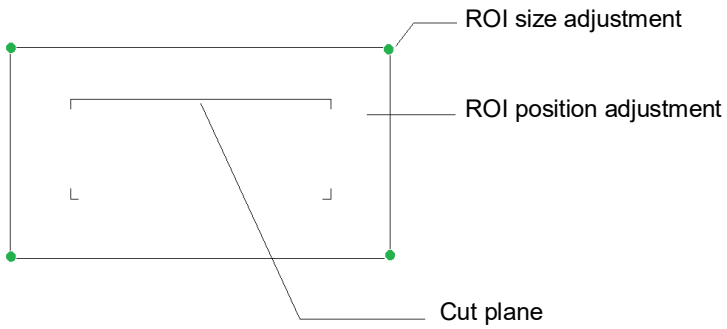

Tap the corner (green dot) of the ROI and drag to change the size.

Tap inside the ROI box and drag to change the position.

Tap the cut plane and drag to change the curved VOI position.

For setting the ROI, be sure to:

- Set the ROI on the 2D image with the largest section area of the target area.
- Set the ROI a little larger than the fetal head.

NOTE:	When defining an ROI, try to eliminate useless data so as to reduce the volume data and shorten the time for image storing, processing and rendering.

4. Select a render mode through the image menu.

   Rocked mode: set [Angle] parameter.

   Linear mode: set [Distance] parameter.

5. Tap[Update](at the bottom-left part of the operating panel) to start the 3D image acquisition.

   The system enters 3D image viewing status when the acquisition is completed. Or, end the acquisition by tapping [Freeze] or [Update].

   In image viewing status, you can perform VOI setting and other operations. For details, see “5.15.2.3 Smart 3D Image Viewing.”

6. Exit Smart 3D.

   Tap[Update] or [Freeze] to return to Smart 3D image acquisition preparation. Or, tap[B] or [Smart 3D] to enter B mode.

5.15.2.2 Smart 3D Acquisition Preparation

■ Method

Capture images using Linear scan or Rocked scan.

- Linear scanning

  Move the probe across the surface. See the following figure.

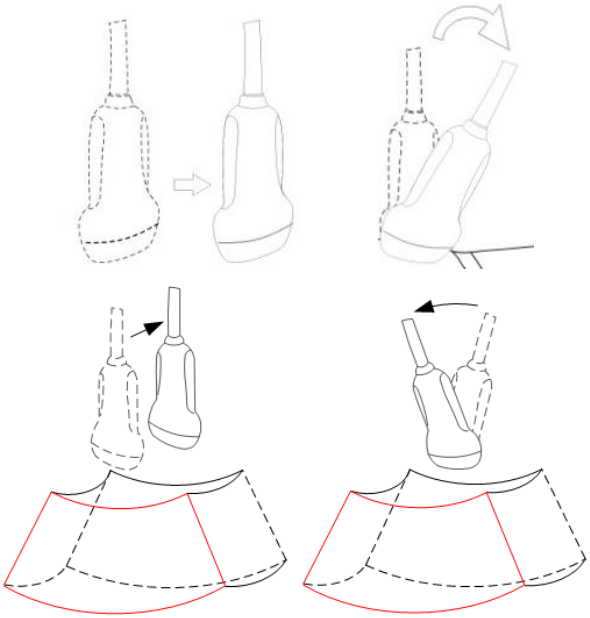

- Rocked scanning

  Rotate the probe once from the left to the right side (or from the right to the left) to include the entire desired region. See the figure.

■ Description of parameters:

Parameter		Description
Method		Function: select the image acquisition method. Selection: Rocked, Linear. Linear mode: during the sweep, the probe must be kept parallel. The scanning speed should be constant. Rocked mode: in this mode, the probe must be moved to a position where you can clearly see a middle cut of the object you want to scan and render. Tilt the probe to about 30 degrees until the object you want to scan disappears. Start the acquisition and tilt the probe over a distance of around 60 degrees until the object disappears again. During the sweep, the probe may not be moved parallel, just tilted. Tip: the speed is related to scanning distance or angle.
Distance		Function: to set the distance the probe covered from one end to the other end during a linear sweep.
Angle		Function: to set the angle the probe covered during a fan sweep.
Render Mode	Surface	Function: set Surface as the 3D image rendering mode. This is useful for surface imaging, such as fetus face, hand or foot. Tip: you may have to adjust the threshold to obtain a clear body boundary.
	Max.	Function: set Max. as the 3D image rendering mode. Displays the maximum echo intensity in the observation direction. This is useful for viewing bony structures.
	Min.	Function: set Min. as the 3D image rendering mode. Displays the minimum echo intensity in the observation direction. This is useful for viewing vessels and hollow structures.
	X-ray	Function: set X-ray as the 3D image rendering mode. Displays the average value of all gray values in the ROI. X Ray: used for imaging tissues with different internal structures or tissues with tumors.

5.15.2.3 Smart 3D Image Viewing

Enter/Exit Image Viewing

■ To enter image viewing:

The system enters image viewing when image acquisition is complete.

■ Exit

To return to Smart 3D image acquisition preparation status, tap[Update] or [Freeze].

Activate MPR

Tap [A], [B], [C] or [VR] to activate MPR or 3D image (VR).

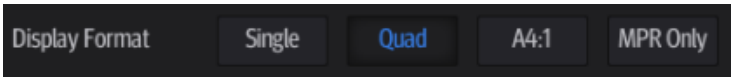

MPR Viewing

In the actual display, different colors for the window box and the section line are used to identify the MPR A, B and C.

- Window A is blue, and the lines (representing MPR A) displayed in the other two windows are also blue.
- Window B is yellow, and the lines (representing MPR B) displayed in the other two windows are also yellow.
- Window C is orange, and the lines (representing MPR C) displayed in the other two windows are also orange.

The positions of the other two MPRs are indicated in the selected plane by color described above.

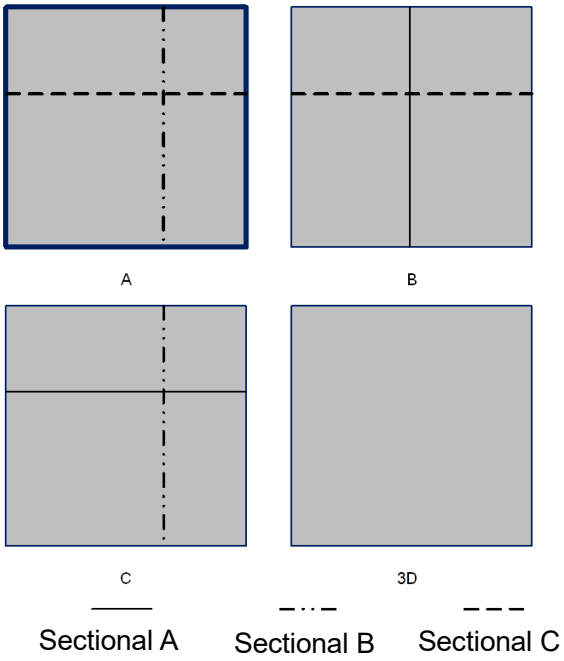

Display Format

Tap to select the display format of VR and MPR images: [Single], [Quad] and [A4:1].

MPR Only

Tap [MPR Only] to display MPR only. The adjustable image parameters are changed to MPR parameters automatically.

Only A, B and C MPR are displayed, and VR is not displayed.

View Direction

The Region of Interest (ROI), also referred to as the Render Box in rendering, contains the section of the volume you want to render. Therefore, objects that are not inside the box are not included in the render process and are cut out (this is important in surface mode to allow a free line of sight). This may or may not be the entire VOI.

You can adjust the view direction of the ROI.

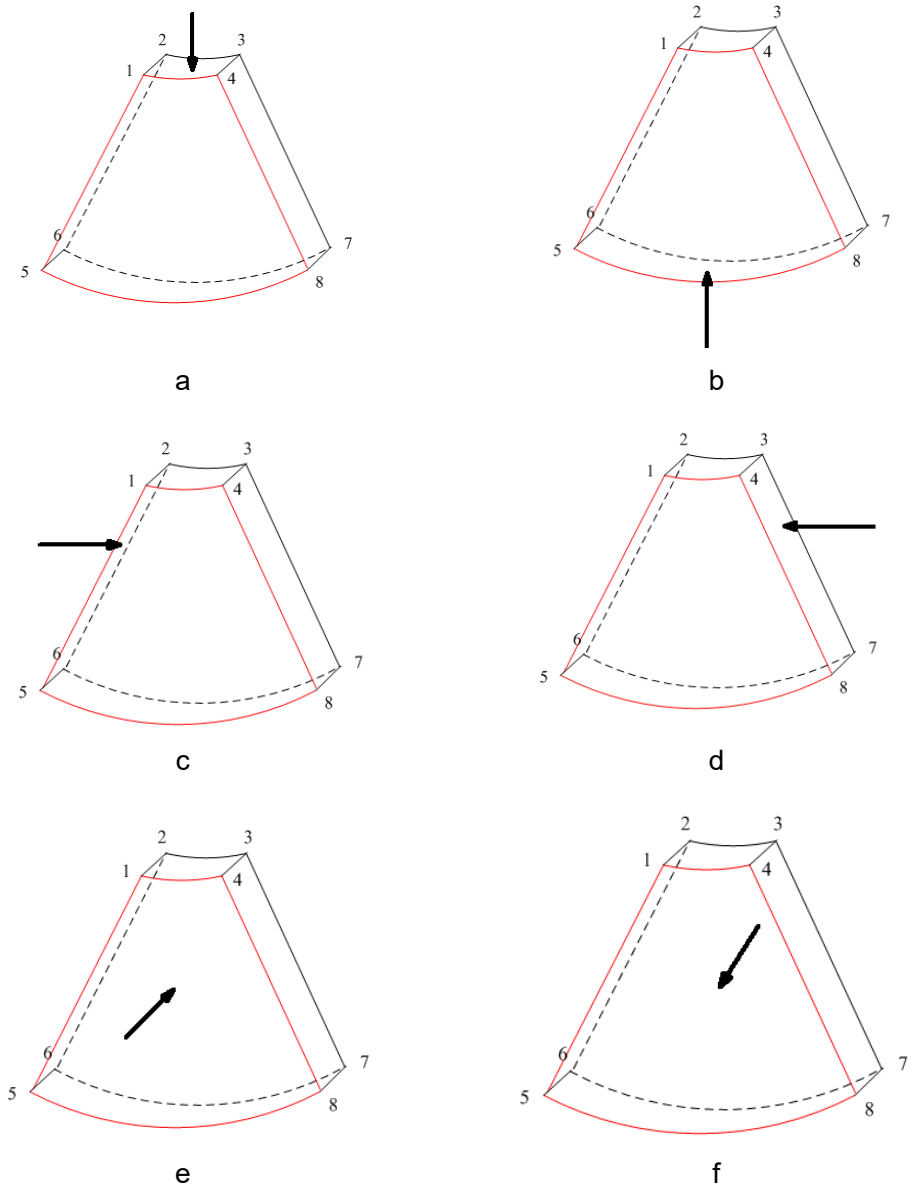

View Direction

a. Up/Down	b. Down/Up
c. Left/Right	d. Right/Left
e. Front/Back	f. Back/Front

Tap [Up/Down], [Left/Right] or [Front/Back] to select the direction of the above Figure a, c and e.

Tap [Flip] to view in the opposite direction to the current direction, as shown in Figures b, d and e.

Adjust VOI

■ VOI On

The VR image displays VOI information.

1. In image viewing status, select [VOI] to turn it to “On.”
2. Select the desired window by tapping [A], [B] or [C] or [VR].
3. Change the VOI position, size and curved VOI if necessary.

■ VOI Off

The VR image displays ROI information.

When [VOI] is set as “Off”, the ROI image is displayed on the screen. Swipe the image in different directions to observe the MPR.

■ Accept VOI

1. This function is usually used for MPR observation and to determine the relative position of the MPR to the VR.
2. Select [Accept VOI] to be [On].
3. Select the desired MPR by tapping [A], [B] or [C] or [VR].
4. Swipe on the current active MPR to view the image. The other two MPRs change correspondingly.

Image Rendering Parameters

In image viewing status, render the image by adjusting the relevant parameters.

Render setting parameters description:

Tap 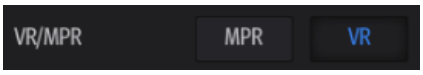

to select VR or MPR parameter adjustments.

- When [VR] is highlighted, parameter adjustment is performed on the VR image.
- When [MPR] is highlighted, parameter adjustment is performed on the MPR.

Adjustable parameters are as follows:

Parameter	Description
Threshold	Function: to set the threshold for VR rendering. The VR is rendered using the signal between the high and low thresholds. When signals are received, from small to large, they are divided into different levels assigned within the range of 0-100%. The threshold is a selected range where the system filters out signals below it and above it to render the VR image. The lower threshold can eliminate lower range noises and echo, which contributes to a clearer and smoother image. Available in Surface render mode only.
Opacity	Function: to set the transparency value for VR rendering. The lower the number, the more transparent the grayscale information. Available in Surface render mode only.
Smooth	Function: to set the smoothness of VR. Tip: Insufficient smoothness can result in a fuzzy image, while too much smoothness will lead to image distortion.
Brightness	Function: to set the brightness of VR.
Contrast	Function: to set the contrast of VR.
Tint	Switch tint map on/off.

Parameter	Description
VR Orientation	To quickly rotate the VR.
iClear	Enhances the B mode image profile for better boundary details.

■ Reset Curve

Parameter	Description
Reset Ori.	To reset the volume rotation, shifting and zooming to its original status.
Reset Curve	To reset the curve to its original status.
Reset All	To reset the volume to its original orientation and original parameters.

■ Render Mode

Parameter		Description
Gray/Inversion	Surface	Function: set Surface as the VR rendering mode. This is useful for surface imaging, such as fetus face, hand or foot. Tip: you may have to adjust the threshold to obtain a clear body boundary.
	Max.	Function: set Max. as the VR rendering mode. Displays the maximum echo intensity in the observation direction. This is useful for viewing bony structures.
	Min.	Function: set Min. as the VR rendering mode. Displays the minimum echo intensity in the observation direction. This is useful for viewing vessels and hollow structures.
	X-ray	Function: set X-ray as the VR rendering mode. Displays the average value of all gray values in the ROI. X Ray: used for imaging tissues with different internal structures or tissues with tumors.
	The above four rendering methods can be applied to both gray and inversion modes. Where inversion means to invert the grayscale of the image, so as to enhance observation for low-echo regions, applicable for vessels, cysts, etc. When the function is turned on, the rendering mode parameters change to the corresponding inverse parameters.	

Rotate an Image

■ Axial rotation

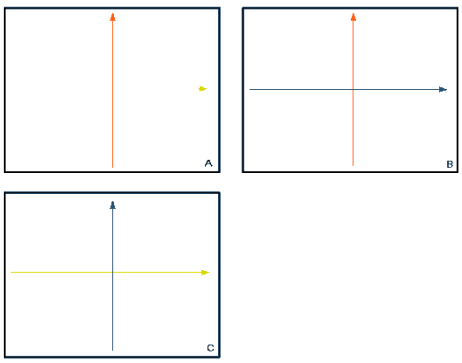

Positions of the other two MPRs are indicated in the selected plane by arrows in different colors.

Using axial rotation function, you can rotate the currently activated image around the X-, Y- or Z-axis.

- Be sure to rotate the image by tapping the image window and move slowly.
- Swipe along the X/Y/Z-axis to rotate the image against the X/Y/Z-axis. Take rotation on window A for example:
  - To rotate along the X-axis: swipe from top to bottom and the image rotates right along the X-axis. Swipe from bottom to top and the image rotates to the left.
  - To rotate along the Y-axis: swipe from left to right and the image rotates right along the Y-axis. Swipe right to left and the image rotates to the left.

Image Zooming

Zoom in/out MPR and VR images by pinching the two fingers on the image.

Sync

This function switches the view direction perpendicular to the current active plane, so as to get a better view of VR.

Comments and Body Marks

- Function:

  Add comments and body marks to the MPR and VR.
- Operation:

  The operation is the same as adding comments and body marks in B image mode.

Section image (MPR) measurement.

2D related measurements can be performed on MPR. For details, see [Advanced Volume].

Measurement is not available in acquisition preparation status.

5.15.2.4 Image Saving and Reviewing

- Image saving
  - In 3D viewing mode, tap [Save Image] to save the current image to the animal information management system in the set format and image size.
  - Save clip: in 3D viewing mode, tap [Save Clip] to save a CIN-format clip to the hard drive.
- Image review

  Open an image file to enter the image review mode. In this mode, you can perform the same operations as in VR viewing mode.

6 Display & Cine Review

6.1 Splitting Display

The system supports dual-split display format. However, only one window is active.

Dual split:

1. Select [Dual] to be “on” from B image menu to enter dual-split mode.
2. Tap each window to switch the active window (marked with “m” icon.)
3. Tap [B] or select [Dual] to be “Off” to exit to single window.

6.2 Image Magnification

NOTE:	Zooming an image changes the frame rate which tends to change the thermal indices. The position of the focal zones may also change, which may cause the peak intensity to occur at a different location in the acoustic field. As a result, the MI may change.

Use two fingers to pinch on the image area to zoom in/out the image.

Tips: for the following mode, you need to tap [Image] -> [B] to highlight B menu first.

- B+Color
- B+M
- B+PW/CW
- B+Color+PW/CW
- B+Power+PW/CW

6.3 iZoom (Full Screen View)

This feature magnifies the image area in full screen for a better observation.

■ To enter iZoom:

Swipe the screen from the top to the bottom.

■ To exit iZoom:

Tap [Exit iZoom] button on the screen; or, swipe the screen from the bottom to the top.

6.4 Freeze/Unfreeze the Image.

Tap [Freeze] in the bottom-right corner of the operating panel to freeze a scanning image. In freeze mode, the probe stops transmitting acoustic power, and all images and parameters are frozen.

Tip: After freezing an image, the system may enter cine review, measure, comment adding, body mark mode or current mode, depending on what has been preset. (Setting path: [Setup] -> [System] -> [Image]->“Freeze Config”)

Tap [Unfreeze] in freeze mode to unfreeze the image, and the system continues image scanning.

6.4.1 Imaging Mode Switching When Frozen

Imaging mode switching in freeze mode follows these principles:

- In splitting display B mode, tap each image window to switch between the windows.
- In freeze mode, the system supports imaging mode switching between the sub-modes (only for the activated window). For example, if the frozen image is in B+Color+PW mode, the system supports imaging mode switching between B+Color+PW, B+Color, B+PW and B by tapping [Color] or [PW].

6.5 Cine Review

After tapping [Freeze], the system allows you to review and edit the images prior to the image being frozen. This function is called cine review. You can perform zoom, measurements, add comments and body marks on the images being reviewed.

The system supports manual review as well as automatic review.

In addition, the system supports the images reviewed along with physiological waveforms, if the detection of physiological waveforms is performed.

⚠ **CAUTION:**	**Cine Review images can be inadvertently combined in-between separate animal scans. The Cine Review memory must be cleared at the end of the current animal exam and before starting the next new animal exam by tapping [End]in the bottom-left corner of the operating panel.** **Cine files stored in the system’s hard drive should contain animal information, to avoid the selection of an incorrect image file and potential misdiagnosis.**

6.5.1 Entering/Exiting Cine Review

- To enter Cine Review:
  - Enter [Setup] ->[System]-> [Image] -> “Freeze Config” screen to set “Status after Freeze” to “Cine.” The system enters manual cine review status once [Freeze] is tapped.
  - Open cine files in Review screen. The system enters automatic cine review status.
- To exit Cine Review:

  Tap [Freeze] or [B] and the system will return to image scanning and exit cine review.

6.5.2 Cine Review

Under cine review status, cine review control bar will be displayed on the cine menu.

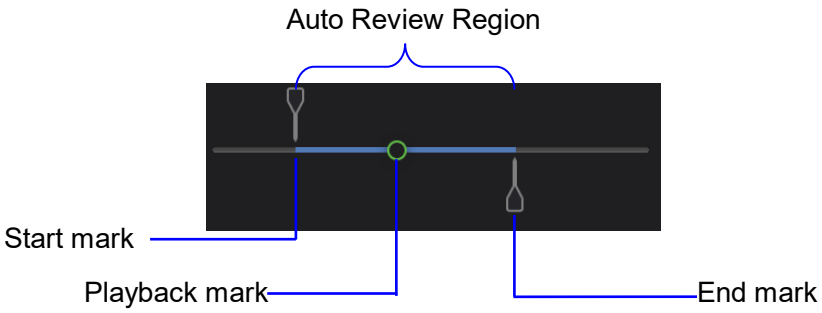

For B/B+Color/B+Power mode, bottom-left corner will indicate current frame and total frames.

For B/B+M/B+PW/B+CW mode, bottom-left corner will indicate time played and total time.

■ Manual Cine Review:

After entering cine review in 2D mode, drag playback mark to review the cine images on the screen one by one.

Drag the playback mark to the left to display the earlier stored images; drag the playback mark to the right to display the recently stored images.

Or, swipe the image area to the right to display the earlier stored images; swipe the image area to the left to display the recently stored images.

The cine progress control panel (as shown in the figure below):

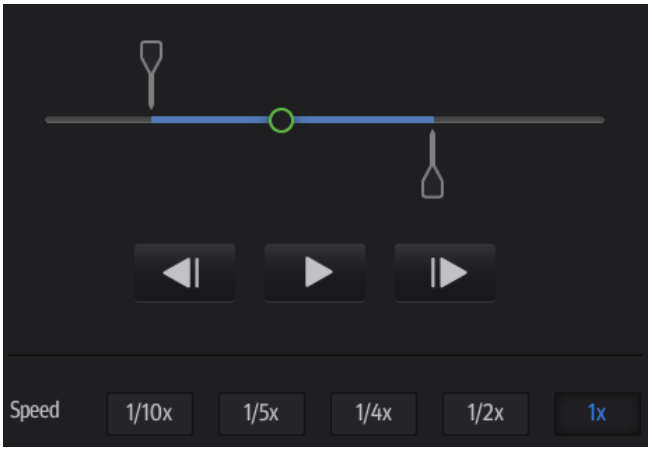

■ Auto Review

- Reviewing all

  a) In manual cine review status, tap to activate auto cine review.

  b) Review speed: in auto cine review status, tap to select different speeds: 1/10x,1/5x,1/4x,1/2x,1x.

  c) In auto play status, tap 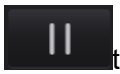 to stop auto play.

- Setting the Auto Review Region

  You can set a segment of cine loop which can be reviewed automatically. After the auto review region is set, the auto cine review can only be performed within this region; but the manual cine review can be performed beyond this region.

  a) Set first frame: drag to the frame as start point.

  b) Set end frame: drag to the frame as end point.

  c) Tap to start play and select the speed.

  d) Tap 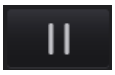 to end auto play.

  Tip: When the cine file is saved, only images within the auto review region are saved.

6.5.3 Linked Cine Review

Linked cine review reviews images captured at the same moment.

- B+M
- Duplex mode (B+PW/CW)
- Triplex mode

Frame synchronization mark

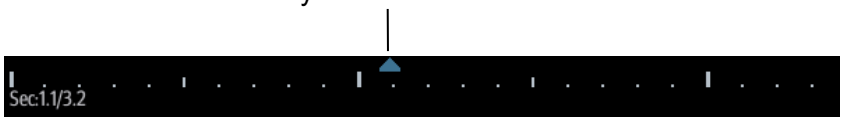

The frame mark on the time mark of the M/PW/CW image indicates the corresponding 2D image.

6.6 Image Compare

Perform the following steps to perform image compare.

1. Tap [iStation] to enter the iStation screen, and select the exam to be compared.
2. Tap [Compare] to enter the Compare screen, and select the images to be compared.

   Tip: for B/B+COLOR/B+TVI/B+POWER/B+TEI mode image, you can select at most 2 images; for PW/M/CW/TVD/contrast single mode image, you can select at most 2 images.
3. Tap [Done] to enter image comparison mode.
4. Review images from different image windows. Tap the single-frame image to switch the active image window; or, tap the cine twice to switch the active image window.

   The window with the highlighted “M” mark is the currently activated window.
5. Save the image if necessary.
6. Tap [Return] on the screen or tap [UnFreeze] to exit image compare.

6.7 Cine Saving

■ Live capture

Live capture refers to saving the images or cines in image scanning status. After storing, the system continues with image scanning.

Live capture can be divided into two types: retrospective and prospective.

- Retrospective saving saves specified images which were captured before the current moment. Images stored in the cine memory are saved to the system's hard drive.
- Prospective saving saves specified images which are captured later than the current moment. Images are saved to both the cine memory and the system's hard drive.

The live capture time can be set.

To perform live capture:

- Tap [Pro Capture] or [Retro Capture] in contrast imaging real-time mode.
- Tap [Save Clip] to pro/retro capture the images (setting path: [Setup] -> [System] -> [General]->"Live Capture"->[Save Clip])

■ Frozen image storage

In frozen mode, tap [Save Cine].

6.8 Preset

6.8.1 Setting Cine Length

Select [Setup] -> [System] -> [General] to perform the following settings:

■ Cine saving storage (for [Save Clip] at the bottom of the operating panel)

■ Live capture

- Type: Retrospective, Prospective. (for [Retro Capture] and [Pro Capture] in contrast imaging mode)
- Cine length:

Tip: If the value is out of range, the system can change it to the acceptable effective value.

7 Measurement

You can perform measurements on zoomed images, cine reviewing images, real-time images or frozen images. For measurement details, see the [Advanced Volume].

⚠ **WARNING:**	**Be sure to measure areas of interest from the most optimal image plane to avoid misdiagnosis arising from inaccurate measurement values.** **To obtain accurate Doppler flow measurement values, make sure the transmitting beam is not perpendicular to the flow as this may lead to false readings and potential misdiagnosis.**

⚠ **CAUTION:**	**If an image is unfrozen or the mode is changed during a measurement, the calipers and measurement data will be cleared from the screen. Measurement data will be stored in the report.** **If the system is turned off or [End] is tapped during a measurement, unsaved data will be lost.** **In dual-B imaging mode, the measurement results of the merged image can be inaccurate. Therefore, the results are provided for reference only, not for confirming diagnoses.**

7.1 Basic Operations

- To enter/exit measurement
  - Tap [Measure] -> [Basic] on the operating panel to enter basic measurement.
  - Tap [Measure] -> [Advanced] on the operating panel to enter advanced measurement.
- To exit: tap [Basic] or [Advanced] again.

- Measurement results window

The system displays and updates measurement results in the results window.

7.2 General Measurements

There are measurements for B/B + Color/B + Power mode, M mode and Doppler (PW/CW) mode.

Measurement Tools	Function
Distance	Measures the distance between two points of interest.
Depth	Measures the distance between the probe surface and the probing point along the ultrasound beam.
Angle	Measures the angle between two intersecting planes.
Ellipse	Fix a closed ellipse region by two axes perpendicular to each other and calculate the area of the closed region.
Trace	Fix a closed region by trace manually and calculate the area of the closed region.
Smart Trace	Measures the lengths of major axis and minor axis, area and circumference of a closed region on the image semi-automatically
Volume	Measures the volume of a target.
Distance Ratio	Measures the lengths of any two lines and calculates the ratio.
Area Ratio	Measures the areas of any two regions and calculates the ratio.
Time	Measures the time interval between any two points.
Slope	Measures the distance and time between two points and calculates the slope.
HR	Measures the time of n (n≤8) cardiac cycles and calculates the heart rate in M mode images.
Velocity	Calculates the average velocity by measuring the distance and time between two points.
D Trace	On PW mode images, one or several Doppler waveforms are traced to obtain the speed and PG, etc.
D Trace (Car)	On PW mode images in cardiology, one or several Doppler waveforms are traced to obtain the speed and PG, etc.
PS/ED	Velocity and PG between two peaks on the spectrum are measured to calculate the RI (resistance index) and PS/ED (peak systolic/end diastolic).

7.3 Advanced Measurements

The categories of the advanced measurements are as follows:

- Abdomen measurements - used for measuring abdominal organs (liver, gall bladder and kidney, etc.) and large abdominal vessels.
- Reproduction measurements - used for animal reproduction related parameters.
- Cardiac measurements - used for left ventricle function measurements and measuring main artery and vein parameters, etc.
- Small Part measurements - used for small parts such as the thyroid, breast, MSK, superficial.
- Vascular measurements - used for carotid, cerebral, upper and lower extremities vessels, etc.

7.4 Measurement Accuracy

Table 1 Basic Dimension Measurements

Parameter	Range	Error
Distance	Full Screen	Within ±4%
Area (ellipse, circle)	Full Screen	Within ±7%
Trace Area	Full Screen	Within ±7%
Circ	Full Screen	Within ±10%
Angle	Full Screen	Within ±3%
Volume	Full Screen	Within ±12 %

Table 2 Basic Time Motion Measurements

Parameter	Range	Error
Distance	Full Screen	Within ±4 %
Time	Timeline Display	Within ±2%
Heart Rate	Timeline Display	Within ±5%
Velocity (PW mode)	10-200cm/s (for non-transcranial application) 10-300cm/s (for transcranial application)	When angle≤60º, ≤5%.
Velocity (CW mode)	10-200cm/s (for non-transcranial application) 10-300cm/s (for transcranial application)	When angle≤60º, ≤5%. (not including pencil probe)

NOTE: Within the selected field range, measurement accuracy is ensured within the range mentioned above. The accuracy specifications are performed in the worst conditions, or based on real system tests, regardless of acoustic speed error.

8 Physiological Signal

ECG function in the ultrasonic exam (mainly in cardiac exams) is used to display the physiological signal waves for observing the ultrasonic image synchronously and to locate the ultrasonic image by time according to the time phase signal provided by this function.

The ECG function is an option.

⚠ WARNING:

1. **Do not use the physiological traces for diagnosis and monitoring.**
2. **To avoid electric shock, the following checks shall be performed prior to an operation:**
   a) The ECG electrode cable shall not be cracked, frayed or show any signs of damage or strain.
   b) The ECG electrode cable shall be correctly connected.
   c) You should use the ECG leads and PCG transducer provided with the physiological module. Otherwise it may result in electric shock.
3. **The ECG electrode cable must be connected to the system first. Only after the cable is connected to the system, can the animal be connected to the ECG electrodes. Otherwise, it may cause electric shock to the animal.**
4. **Do not place the ECG electrodes directly in contact the animal's heart; otherwise it may lead to stop of the animal's heartbeat.**
5. **Before using high frequency electric surgical unit, high frequency therapeutic equipment or defibrillator, be sure to remove the ECG electrode from the animal, in order to prevent electric shock.**
6. **Conductive parts of electrodes and associated connectors for ECG should not contact other conductive parts including earth / grounding.**
7. **Frequent trampling or squeezing on the cables may result in cable break-down or fracture.**
8. **If an abnormality is detected in physio trace, check that the ECG leads are properly connected to the system.**

8.1 ECG

8.1.1 ECG Operation Basic Procedures

1. Connect the ECG module to the serial port on the rear cover of the main unit. Place the ECG electrodes on the animal's body.
2. Tap [Physio] on the right of the screen to enter physio operation status.
3. Switch the imaging modes and display formats. Adjust the parameters to obtain an optimized image.
4. Parameter adjusting

   In image menu, tap [ECG] on the right side of the operating panel to turn ON/OFF the ECG wave display. Adjust the [Speed], [ECG Gain], [Position] and [Invert]
5. Trigger:

   Tap[Trig Mode] to open the triggering function and sect the trigger time.
6. Freeze the image and review the image and waves.
7. Exit ECG mode, and remove ECG electrodes from the animal.
8. Tap [Physio] to exit the ECG mode.

8.1.2 ECG Triggering

8.1.2.1 Overview

ECG triggering means that image scanning is activated at some time points of ECG signals, thus obtaining B images at these time points. In most cases, 5he triggered image are 2D-mode image. When ECG triggering occurs, a mark appears on the ECG waveform, indicating the time points when the B images are captured (corresponding to the delay time from R curve started).
NOTE:

- The trigger mark is displayed in both freeze mode and live mode.
- Trigger function is unavailable if the ECG trace is disappeared. Only the live 2D image can be triggered.
- No delay time or time interval shall less than the time required to scan a single image.
- If the delay time is longer than a heart cycle, then the heart cycle between the delay time is omitted, that is to say no trigger is occurred when R waveform is detected in the duration.

8.1.2.2 Triggering Mode

This system supports single trigger.

- Single Trigger: When an R waveform is detected, an image will be triggered after delay time T1. The value of T1 can be changed in triggering status.

The operational steps are as follows:

1. Select exam mode.
2. Tap [Trig Mode] to turn on the trigger function.
3. Set the delay time T1.

8.1.3 ECG Review

8.1.3.1 Review Principle

When an image is frozen, the ECG waveform where the image is triggered will be frozen at the same time. When images are reviewed with the ECG electrodes connected, the ECG trace is the reference for time.

After the images are frozen, all real time images are in the status of linked review.

8.1.3.2 Linked Review of ECG Signal, M/D Images and 2D Images

If the real (triggered) physio signal, M/D images and 2D image are frozen at the same time, then they will be reviewed synchronously in the linked status.

8.2 Parameters description

The physio parameters are described as follows:

Parameter	Description
ECG Source	Select ECG source.
Gain	Function: to set the amplitude of the trace.
Position(%)	Function: to set the vertical position of the both traces on the image display.
Speed	Function: adjust the speed of the physio trace.
Trig Mode	Turn on/off the triggering function.
Invert	Invert the ECG signal wave for observation.
T1	Function: to set the delay time T1 in Single trigger.

9 Annotations and Body Marks

9.1 Annotations

Annotations can be added to an ultrasound image to bring attention, notate or communicate information observed during the examination. You can add annotations to: zoomed images, cine review images, real-time images, frozen images. You can type annotations as characters, insert pre-defined annotations from the annotations library or insert arrow markers.

⚠ **WARNING:**	**Ensure that the entered annotations (body marks) are correct. Incorrect annotations may lead to misdiagnosis!**

9.1.1 Annotations Basic Procedures

To enter an annotation:

1. Tap [Annotate] on the operating panel to enter annotation status as well as entering the annotation sub-menu.
2. Tap to put the cursor over the desired location on the image area for the annotation.
3. Add a new annotation to the image in accordance with the actual situation. You can modify, move or delete a completed annotation.
   - Arrow: tap [Arrow] to put an arrow on the image.
   - Type annotation: tap [Keyboard] to enter the text-typing status.
   - Select an annotation text directly from the menu.
4. Tap [Annotate] again to exit annotation status.

9.1.2 Annotation Menu

The system can be configured with annotation text libraries. In annotation status, you can enter the annotation text using the menu.

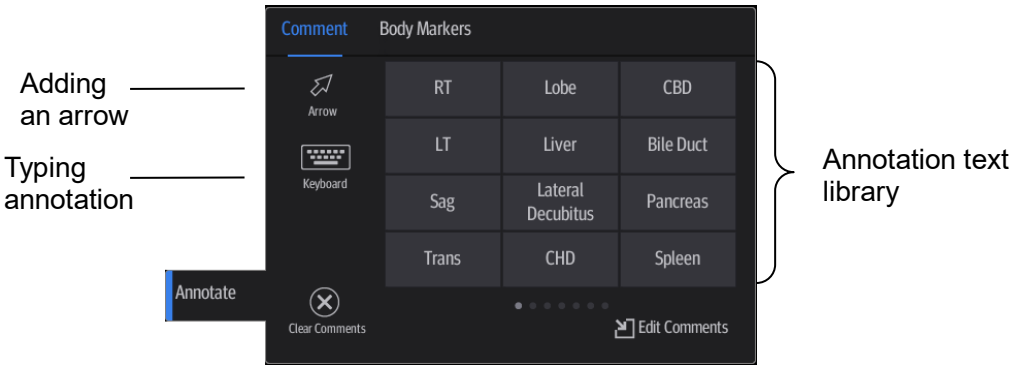

[Edit Comments]: Tap to enter comment preset page, you can add custom comments and change comment layout. See chapter “12.2.3 Comment Preset” for details.

9.1.3 Adding Annotations

■ Typing annotation characters

1. To set the annotation location:

   Tap to position the cursor on the desired location within the image area.

2. Tap

to open the soft keyboard:
   - Type alphanumeric characters using the soft keyboard (characters are uppercase by default).
   - In edit status (the characters are green in color), tap to move the cursor to the new line. The cursor is aligned with the first line.
3. In edit status, tap regions other than the annotation on the image area to confirm the added character. The color of the added character turns to yellow.

■ Adding an annotation text

In annotation status:

1. Tap to select the desired annotation text on the annotation menu.
2. The system adds the selected annotation text to the screen (in current status, the annotation is in green, which means you can continue editing the annotation).

   Add/change position indication: select [RT]/[LT]/[XS]/[Sag]/[Mid]/[Dist]/[Pro] to indicate anatomical location.
3. Tap regions other than the typed in annotation on the image area to confirm the added character. The annotation changes to yellow.

■ Adding an arrow

You can add an arrow to a location you want to highlight.

1. Tap

and an arrow will appear in the cursor position.
2. Adjust the shape and position of the arrow:

   To position the arrow on the area of interest and change the orientation: tap and rotate the arrow icon to change the arrow position; tap and rotate the dotted line under arrow icon to change the arrow orientation.
3. Tap regions other than the added arrow on the image area to confirm the arrow position. The arrow turns yellow. Repeat the above steps to add more arrows.

9.1.4 Moving Annotations

1. Under annotation status (annotation menu is highlighted in blue), tap to select the annotation to be moved.
2. Tap the desired position to move the annotation to current position.
3. Tap regions other than the moved annotation on the image area to confirm the position.

9.1.5 Modifying (Editing) Annotations

- Modifying (Editing) characters

1. In annotation status, tap to select the annotations to be modified.

   Tap to select the added annotation, the annotation turns into green in editing status.

2. Tap

to show the soft keyboard and use the direction keys to move the cursor to the desired location to insert/delete characters. Either type characters by tapping the corresponding keys or select the new annotation text from the menu directly.

3. Tap to delete the annotation character or text on the left side of the cursor.
4. Tap regions other than the edited comment on the image area to confirm the modification and exit the edit status. The annotation turns to yellow.

- Modifying (Editing) Arrows

1. Tap to select the arrow that needs to be modified, the arrow then turns green. Change the arrow's position or change the orientation as described in “Adding an Arrow” in “9.1.3Adding Annotations” chapter.
2. Tap regions other than the modified arrow on the image area to confirm the change.

9.1.6 Deleting Annotations

- Deleting annotation characters, texts or arrows

1. Tap to select the annotation to be deleted, a [Delete] button displays on the bottom of the image area.
2. Tap[Delete] to delete the annotation.

- Delete all annotations

Tap [Clear Comment] on the annotation menu to delete all the annotations.

NOTE:	After powering off, the system will clear all annotations on the image.

9.2 Voice Comments

The system supports adding voice comment to the frozen images.

9.2.1 Voice Comment Panel

After the system enters the voice comment status, the voice comment panel will be displayed.

9.2.2 Adding Voice Comments

1. To perform voice comments adding, the function should be enabled through the path: [Setup]→[System]→[General].Check “Voice Comment Enabled”. Tap [Save] to exit.
2. Connect the microphone to the mic port of the physic unit panel.
3. Acquire the necessary images and tap [Freeze] to freeze the image.
4. Tap [iVocal] > [Audio Annotation] to enter the voice comment panel.
5. Tap to start recording.
6. After the voice recording ends, tap the icon to end recording. Tap [Save Clip] to save the cine.

NOTE: in voice comment recording status, you can perform measurements, comments adding, body marks adding, print tasks and DICOM tasks.

If you tap [Freeze] during the recording course, the already recorded voice comment cannot be saved.

9.2.3 Voice Comment Review

Open a cine file with voice comment, and during the cine review mode, voice comments are played as well.

For details about opening a cine file, please see Chapter 6 Display & Cine Review.

9.3 Body Mark

The Body Mark (Pictogram) feature is used to indicate the animal's position during the exam as well as the transducer position and orientation.

9.3.1 Adding Body Marks

1. Select [Annotate] -> [Body Markers] on the operating panel to enter Body Mark status as well as open the body marker menu.
2. Tap to select the desired body mark to bring out the Position Probe Marker dialogue box.
3. To adjust the probe position and orientation marker:
   - Tap and rotate the bold solid green line to position the probe marker.
   - Tap and rotate the dotted line to adjust the probe marker orientation.
4. Tap [Set] to confirm the position and orientation of the probe marker and add the mark.

9.3.2 Moving Body Marks

You can move the body mark graphics to any desired position within the image area.

1. Tap to select the body mark. The body mark is covered by a green frame, indicating you can move it to a new position.
2. Tap the desired position to place the body mark.

NOTE:	In Dual-split mode, a body mark cannot be moved between the separate image windows.

9.3.3 Deleting Body Marks

Tap [Clear Markers] to delete the added body mark.

9.4 Settings

- See chapter “12.2.3 Comment Preset” for custom comment adding and layout setting.
- General Setting

Enter the [Setup] -> [System] -> [General] screen to perform the following setting:

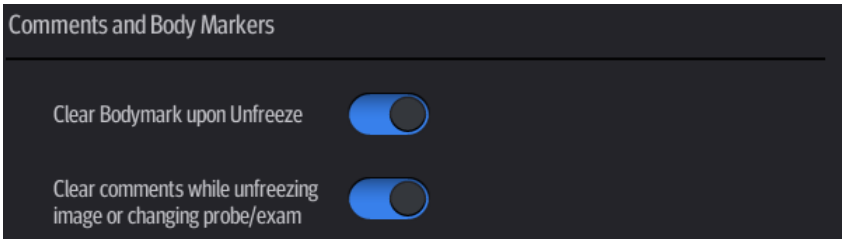

- You can preset whether to clear the annotations when unfreezing the image or changing the probe/exam.
- Set whether body marks are erased when the image is unfrozen.

Exit [Setup] page or changing the exam/animal/mode/probe will clear the body marks.

10 Animal Data Management

An exam record consists of all the information and data for one exam.

An exam record consists of the following information:

- Animal basic information and exam data
- Image files
- Report

NOTE:
1. DO NOT use the internal hard drive for long-term image storage. Daily backup is recommended. External storage media is recommended for archiving images.
2. The system's animal database space is limited. Back up or clear animal data regularly.
3. Mindray Animal Medical is not responsible for lost data if you DO NOT follow the recommended backup procedures.

10.1 Animal Information Management

General animal information and exam information are entered using the Animal Info screen. For details, see “4.1 Animal Information.”

10.2 Image File Management

You can store image files either in the animal database in the system, or to external memory devices. For a saved image, you can perform operations such as reviewing, analyzing and demonstrating images (iVision).

10.2.1 Memory Media

The system supports memory media including:

- System hard disk
- USB memory devices: USB flash drive, removable USB hard disk
- DVD+R, DVD+RW, DVD-R, DVD-RW, CD-RW, CD-R

10.2.2 Image File Formats

The system supports two types of image file formats: system-relevant and PC-compatible.

- System-relevant formats:
  - Single-frame image file (FRM)

    Refers to single-frame static image files which cannot be compressed. You can add measurements and comments on this type of file.

    You can tap [Save Image] at the bottom of the operating panel to save a single-frame image file.
  - Cine file (CIN)

    System-defined multi-frame file format. You can perform manual or auto cine review, and perform measurements or add comments for the reviewed images. After you open a stored CIN file, the system automatically enters cine review status.

You can tap [Save Clip] at the bottom of the operating panel to save a multi-frame image file.

The system can save FRM files as BMP, JPG, TIFF or DCM files, or save CIN files as AVI or DCM files by Send To function in iStation/Review screen. For details, please refer to “10.2.7 Sending Image Files” chapter.

- PC-compatible formats:
  - Screen file (BMP)
    Single-frame file format, used to save the current screen, non-compressed format.
  - JPG: single frame export format.
  - TIFF: single frame export format.
  - PNG: single frame storage format.
  - Multi-medium file (AVI)
    Multi-frame export format.
  - DICOM file (DCM)
    DICOM standard file format, single-frame or multi-frame format, used to record animal information and images, you can only open DCM files to view rather than to edit.

10.2.3 Image Storage Preset

- Set image size

  You can set the image storage size via [Setup] -> [System] -> [General]:

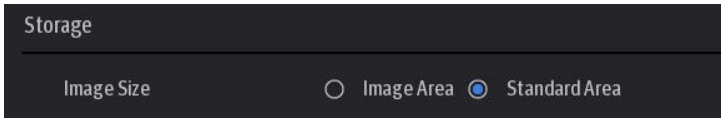

- Set cine saving length (clip length)

  For details, see “6.8 Preset.”

- Set send/print image after ending the exam

Select [Setup] -> [System]-> [General], check “Sending/printing after Ending Exam” in the Animal Management area. Then every time you tap [End], the system will send images of the exam to the connected default DICOM server.

- Image/clip storage settings

Select [Setup] -> [System]->General], check options in the Image/Clip Storage area. Then every time you save an image/clip, the system will send images of the exam to the connected default printer/DICOM Storage server/DICOM Print server/iStorage server.

10.2.4 Quickly Saving Full Screen Images to the System

Tap in the top-right corner of the screen and select to save single frame image (full screen).

The image is saved in BMP format, you can check the image in Review screen.

10.2.5 Image Review and Analysis

You can review and analyze stored images (only refer to images stored in the system default path).

10.2.5.1 Review an Image

You can review all images stored in an exam, and send, delete or analyze the stored images.

Tap [Review]on the left side of the operating panel to enter Review screen or double-click the exam in iStation screen. Images of the current exam and the current animal are displayed.

Controls on the Review screen:

- Report
  Select [Report] tab to review or edit the currently-selected animal's report.
- Animal
  Select [Patient] tab to review or edit the currently-selected animal information.
- Image operations
  [Select All]: tap to select all images in the thumbnail window.

  [Deselect All]: after selecting [Select All], the button changes to [Deselect All]. Cancel all selections by selecting [Deselect All].

  [Send To]: tap to send the selected image to another location, DICOM server, printer, etc.

  [Delete]: tap to delete the selected image.

  : Tap to change the layout.

■ Tap [Done] to exit Review:

10.2.5.2 Image Analysis

In image analysis status, you can view, zoom, perform image parameter adjustment and measurements, add comments and perform cine (multi-frame) review for a stored image. The operation steps are the same as those for real-time scanning. See the relevant sections for details.

■ To enter image analysis:

In image review status, double-click the selected thumbnail to open the image.

Tap the icon or to select the previous or next image.

■ Tap to exit image analysis.

■ Other operations

You can perform cine review operations in image analysis status. For details, see “6 Display & Cine Review.”

10.2.6 iVision

The iVision function is used to demonstrate the stored images. Image files are played one by one according to file names (including system-relevant and PC-compatible format images).

To perform image demonstration:

1. Select [Setup] -> [General] -> [iVision] to enter the iVision setting screen.
2. Add the contents to be played and select demo mode.
3. Select an item in the list and tap [Start] (in the bottom-left corner of the screen) to begin the demonstration.
4. Tap [Exit] to exit iVision status.

The iVision setting screen is shown as follows:

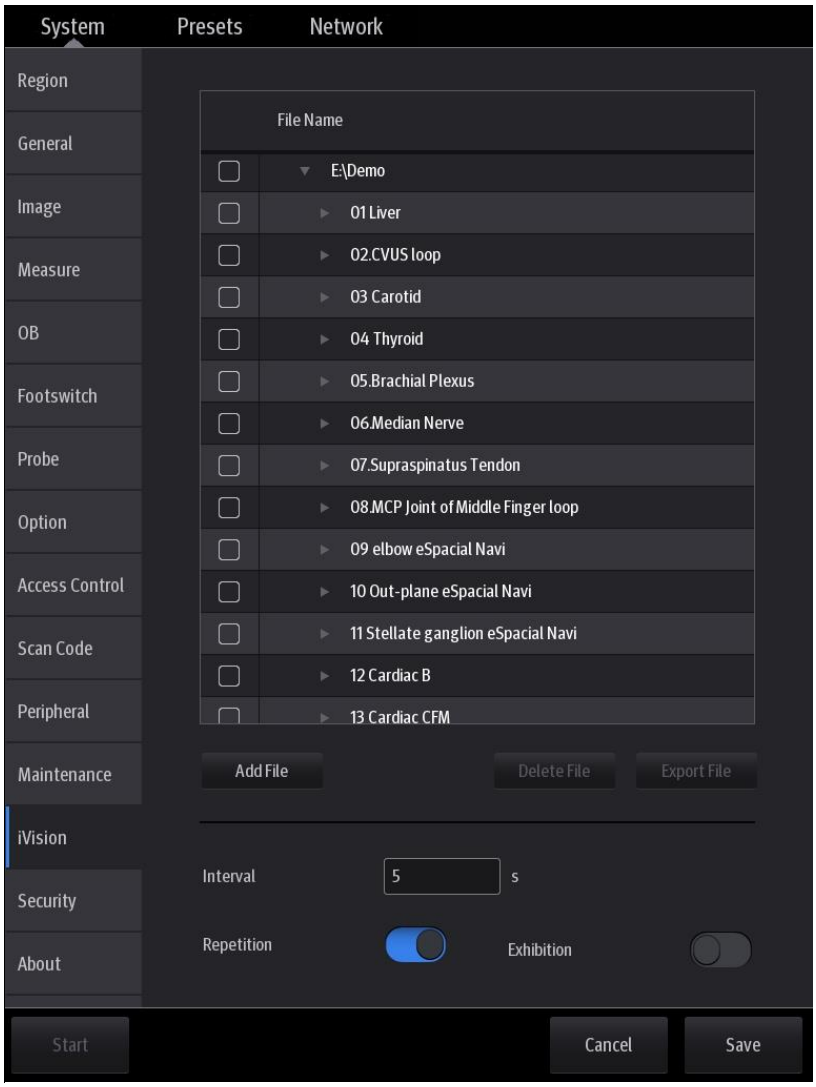

- Demonstration item

  Demonstration items are image files in formats supported by the system. You can add exam data from the animal database or system-supported image files and folders to the demonstration list. For files and folders in the demonstration list, the images in the directory and subdirectory are played one by one, and the system will automatically skip files that cannot be opened.

  - [Add File]: to add files to the file list.
  - [Delete]: to delete selected files or catalogs from the file list.
  - [Export]: to export selected directories/files to external storage devices.
- Interval

  The system automatically plays all the image files in the list one by one.

  The time interval between images played is the same and can be changed.
- Repetition

  You can choose whether to repeat the demonstration or exit after a demonstration is complete.
- Exhibition

  If the function is enabled, the system will play AVI format files automatically.

10.2.7 Sending Image Files

NOTE:	Data saved this way can only be reviewed on the PC and cannot be restored to the ultrasound system. See chapter “10.4.2 Animal Data View & Management” for details about data backup.

- In the iStation screen, select an exam and then tap [Send To], or, in the Review screen, tap [Send To] to send animal images to an external memory device, DICOM Storage server, DICOM Print server or local connected printer. You can choose whether reports are exported with images. See the figure below.

See the figure below.

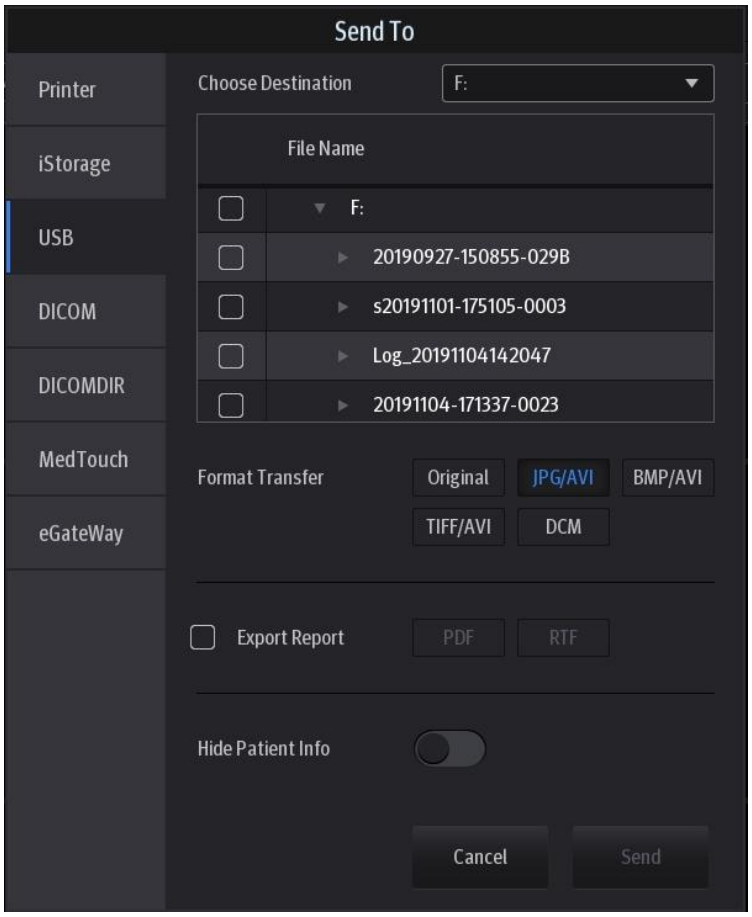

- For external memory devices (e.g., USB memory devices) or iStorage:
  - ➤ PC format transfer: JPG/AVI, BMP/AVI, TIFF/AVI. Where a single-frame image is exported as JPG, TIFF or BMP, and the cine file is exported as AVI.
  - ➤ DCM format transfer: DCM (including single-frame DCM and multi-frame DCM).

  You can also select whether to export reports and select the report type.

  You can select if to hide animal information.
- For DICOM servers, select the DICOM Storage or Print server.
- For DICOM media storage (DICOMDIR), you can select cine file compression mode.
- For video printers, send images to the video printer connected to the system. For graph/text printers, send images to the default graph/text printer.
- For MedTouch devices, single-frame image will be saved in PNG format, and multi-frame image will be saved in AVI format.
- For eGateway servers, select the eGateway server.

10.3 Report Management

- Report storage:

  Exam reports are stored under the animal exam directory.

- Importing, exporting and sending reports
  - Export/import reports via Backup (in ultrasound system format)

    In the iStation screen, select animal data, then select [Options] -> [Back Up]/ [Restore] to import animal information, images and reports to or from an external memory device. See the following figure:

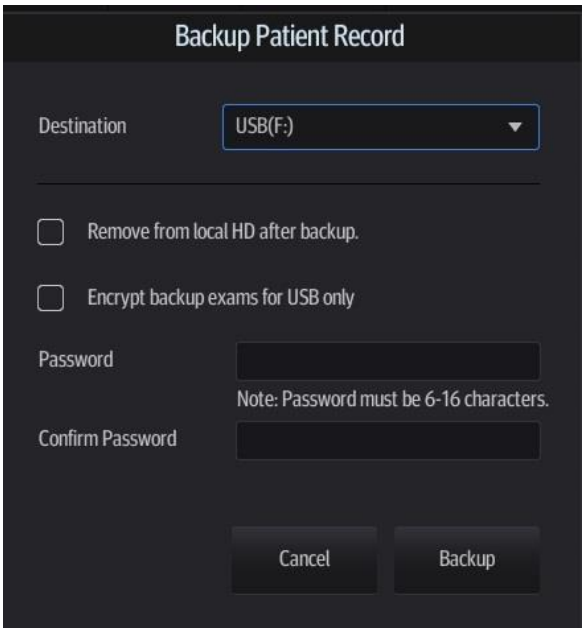

1) Select the destination,
2) Select whether to remove the exam from local HD after backup: if "Remove from local HD after backup" is selected, the exam are removed.
3) Select whether to encrypt backup exams for USB only: input the password and confirm password in the field box, and then tap [Backup]. A "Patient.7z" compressed package is backed up to the USB device, and you need to input the password to open the package.

Notes:	1.	If the password is forgotten, you cannot open the backup package.
	2.	The password cannot be multi-language or Chinese characters.

  - Export reports via Send To (in PC format)

    In the iStation or Review screen, use [Send To] to send animal data/image to an external memory device(e.g., USB memory devices) or iStorage. You can choose whether reports are exported with images. See the figure below.

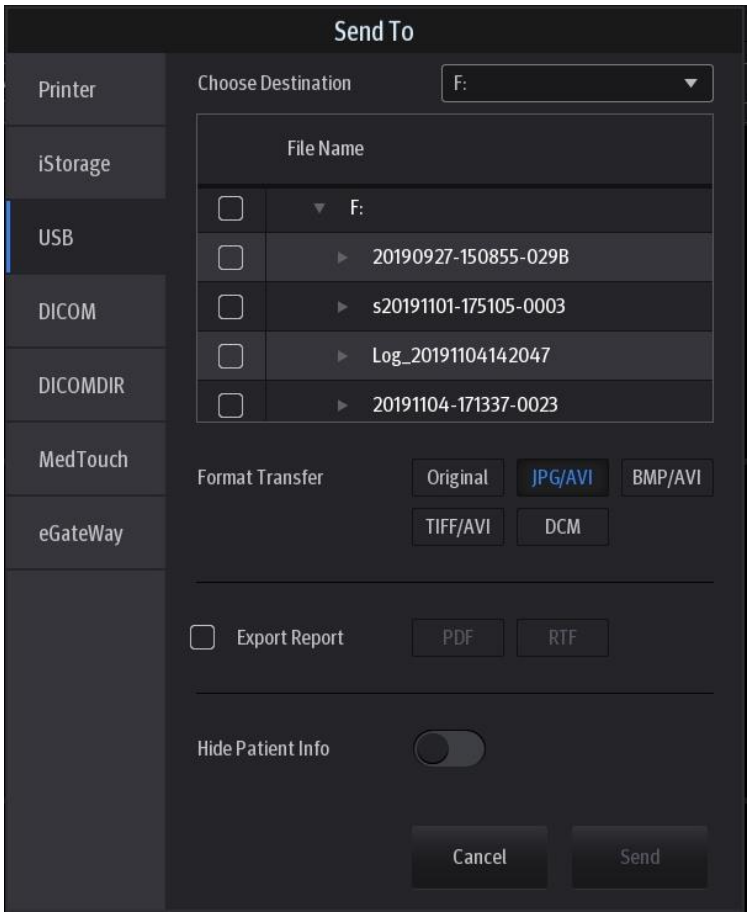

- Export reports in Report screen
  a) Tap [Report] on the left side of the operating panel.
  b) Select [Preview] to enter report preview screen.
  c) Tap [Export] to open the exporting dialogue box and select the path to export.

■ Report printing

Use a connected graph/text printer to print a report.

For details on report-related operations, see [Advanced Volume].

10.4 iStation - Animal Data Management

Animal data includes basic animal information, exam information, image files and reports. You can search, view, backup, send, restore or delete animal data in iStation.

Tap [iStation] on the left side of the operating panel to Enter iStation.

10.4.1 Searching an Animal

1. Select the data source:

   Select the data source from the “Data Source” drop-down list in the top-right corner of the screen.

2. Enter the search condition:
   - Filter: including Name, ID, DOB, Operator and Exam Date. Then enter a keyword in accordance with the Item selected.
   - Tap [Find in results] to make it highlighted, then the system can search on the keyword in the existing searched results.
3. The system searches and displays the results in the animal list.
4. Swipe the screen from left to right to check other information of the animal.

10.4.2 Animal Data View & Management

Double-click the animal exam to enter review screen, you can check animal information data, report and images then.

Tap to select the desired animal exam in the list, you can:

- Backup/Restore

  You can back up the selected animal data to the system-supported media in order to view it on the ultrasound system, or restore animal data to the system from an external media. For exams ended/paused within 24 hours, you can select to activate/continue the exam. For details, see “4 Exam Preparation” chapter.

  - [Options] -> [Back Up]: back up the selected animal data to the system-supported media.
  - [Options] -> [Restore]: import animal data from an external media.
- Activate an Exam

  After selecting an exam which has been performed within 24 hours, tap [Options] -> [Activate Exam] to activate the exam and load the animal information to continue the exam.

■ Send Exam

The system supports sending data to external memory devices, print or iStorage. You can use this function to export the exam data to external devices (in PC data or DICOMDIR data format) and then import to PC or restore to the ultrasound system to review the data (DICOMDIR).

1. Select the animal record, tap [Send To] to send exam data and images of the selected record.

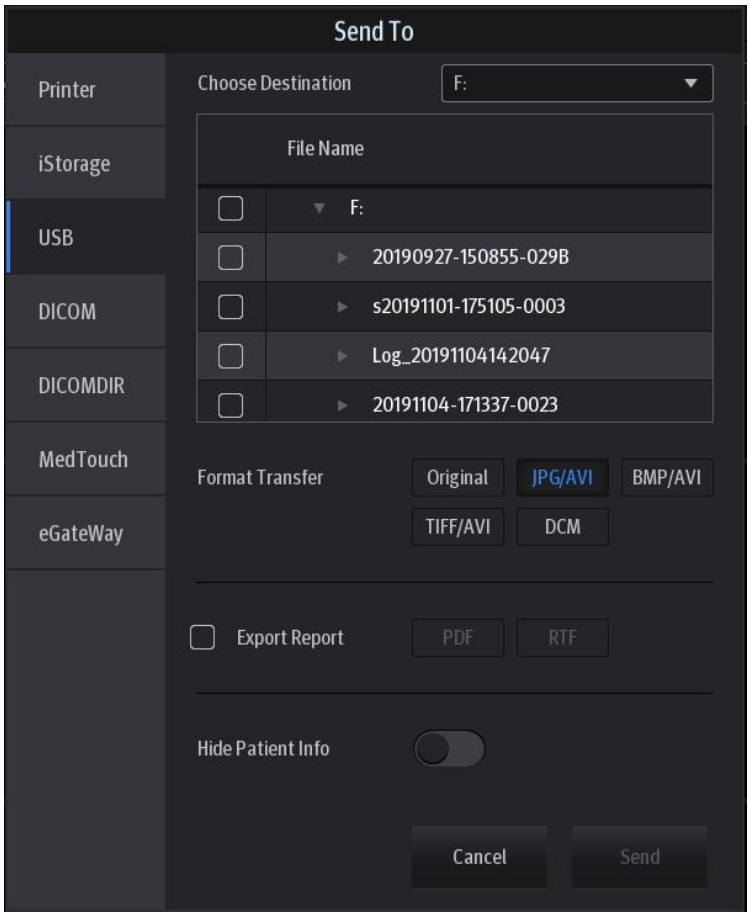

2. Select target:
   - DICOM: send data or images to the storage server or send images to DICOM printer.
   - DICOMDIR: back up data in DICOMDIR format; change the cine Compression mode and JPEG Compression mode.
   - USB storage device: send exam to USB storage device.
     - ➢ Report format can be selected.
     - ➢ Format transfer is available when sending images to USB device. See “10.2.7 Sending Image Files” for details.
   - Print: send image to the connected printer to print.
   - MedTouch: send the exam to MedTouch devices for review.
   - eGateway: send data or images to the eGateway server.

■ Delete Exam

Select an exam record, tap [Delete] to delete the record. You cannot delete animal data which is being printed, exported or sent, or delete the current exam.

■ Query/Retrieve

DICOM Query/Retrieve function, see chapter “11.3.6 Query/Retrieve” for details.

10.5 Recycle bin

The recycle bin is used to store deleted animal data, exam data and images.

Tap in the top-right corner of the screen and select to enter the Animal Recycle Bin screen.

■ To recover deleted animal data

NOTE: if the capacity of the recycle bin exceeds 200. The system reminds the user to clean. Follow the procedures to clean the recycle bin.

1. Select items in the list. Select operations:
   - Tap [Restore Items] to restore the item to iStation.
   - Tap [Delete] to delete the item permanently. The item can never be restored again.
2. Tap [Done] to exit the screen.

■ To set maximum number of days for deleted data to be kept in the recycle bin

NOTE: The animal exams which exceed the preset maximum will be deleted and unrecoverable, it is recommended to perform animal data backup before enabling this function to avoid data loss.

1. Input the desired number besides “Maximum number of days to be kept”.

   If the input box is left blank, the feature will not be enabled.

   Only the whole number ranging from 1 to 365 can be input.
2. Tap [Modify].

10.6 iStorage

iStorage is used to save image files and measurement reports to the remote PC server.

Select [Setup] -> [Network] -> [Network Preset] to set the iStorage settings (see chapter “12.3.3.1 iStorage Preset” for details).

1. Enter the iStation screen. Select one (or more than one) animal data or image in the local data source.
2. Tap [Send To].
3. Select [iStorage] in the Send To dialog box on the left and select the PC server on the right.
4. Select PC transfer format to send the report.
5. Tap [Send] to start sending.

10.7 Print

10.7.1 Print Setting

For printer connection and driver installation, please refer to “3.7 Installing a Graph/Text Printer” chapter.

■ Print Service Setting

1. Select [Setup] ->[System] ->[Peripheral] and select an existing printer service from the list on the upper part of the screen.
2. Select the printer type in the Property box.
3. Set printing properties.
4. Tap [Save] to confirm the setting and exit the preset page.

See chapter “12.1.9 Peripheral Preset” for details about printer selection and print service setting.

- Modify a print service:

1. Select [Setup] ->[System] ->[Peripheral Preset] and select an existing printer service from the list on the upper part of the screen.
2. Select the printer model, then set the properties in the Property box.
3. Tap [Save] to complete.

- Digital image print range setting: [Setup] ->[System] ->[General] -> Storage -> Image Size.

10.7.2 Image Printing

Image printing is mainly achieved by video printer. See chapter “11 DICOM/HL7” for details about DICOM printing.

- Print current screen image

  In the main screen, use [Freeze] to freeze the image and tap [Print] to print the current screen image.

- Image print via send to function

1. Select the desired image in the iStation or Review screen.
2. Tap[Send To] and select the printer in the dialog box which appears.
3. Tap [Send] to start printing.

See the accompanying printer manuals for more details.

10.7.3 Report Printing

Both reports and images can be printed on a graph/text printer**.**

1. Tap [Report]on the left side of the operating panel to enter the report dialog box.
2. Tap [Preview] to enter report preview screen.
3. Select [Print] to print the report.

See the accompanying printer manuals for more details.

10.8 Back Up Files using the DVD Drive

The system supports writing data to CD/DVD using the external DVD-RW/DVD+RW drive.

The system supports the following media: DVD+RW, DVD+R, CD-RW, CD-R, DVD-R and DVD-RW.

- To write data to a CD/DVD:

1. Put a CD/DVD in the external DVD R/W drive.
2. Select the data to be backed up and then select [Option] ->[Back up] in the iStation screen. Select the target drive in the Back Up Animal Record dialog box.
3. Tap [Back up] to begin writing.

You can check the data writing procedure in the animal task manager. For details, see “10.9 Animal Task Management.”

⚠**CAUTION:**	**During the backup process, if a CD/DVD is forcibly taken out or you perform other operations, the backup process will fail or the system may malfunction.**

10.9 Animal Task Management

Tap in the top-right part of the screen to bring up the following dialog box:

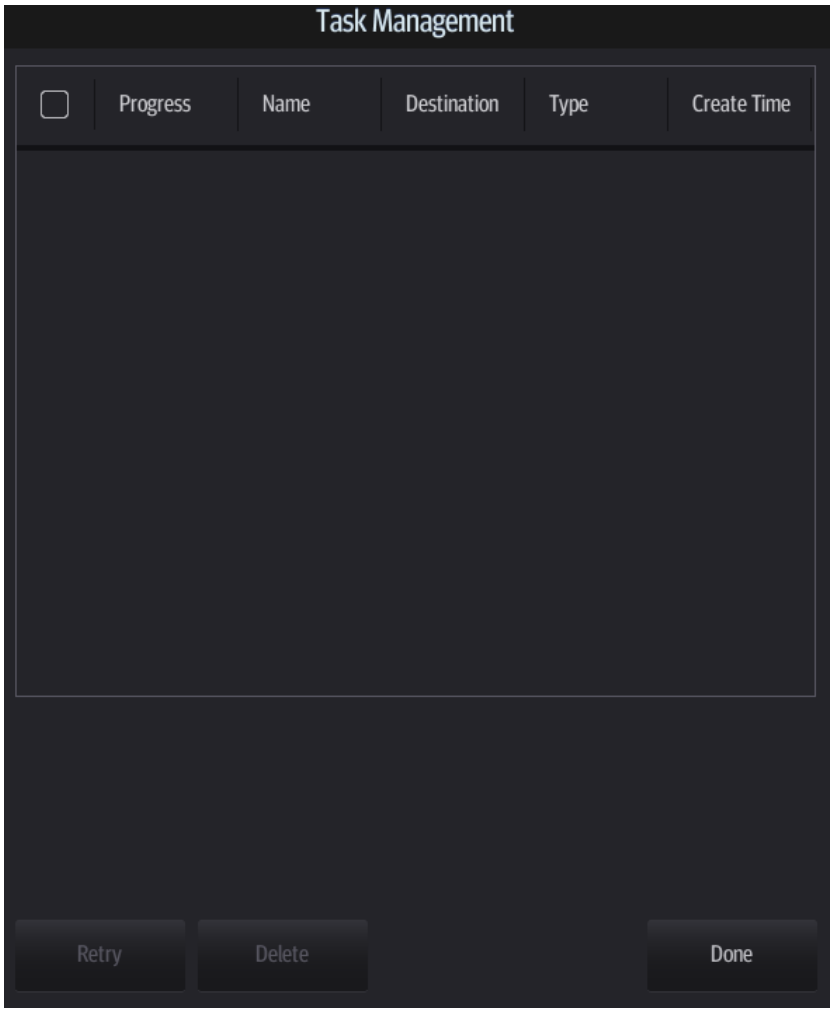

In the Task Management dialog box, the animal name, destination, progress, type and task created time are displayed.

You can perform the following operations:

- Tap [Delete] to delete the task.
- Tap [Retry] to retry the failed task.

■ Media storage task:

- Storage Task: displays the DICOM storage task.
- DICOM media storage task (USB devices): in iStation screen, select the target exam and tap [Send To], then select DICOMDIR in the menu which appears.
- Back up task (system-relevant format): select the exam to be backed up in iStation and tap [Options] ->[Back Up].
- Send to external devices (USB devices): select exam data or images in the iStation or Review screen. Tap [Send To]for the image.
- iStorage task: in iStation screen, select the target exam and tap [SendTo], then select iStorage in the menu which appears.
- MedTouch storage task: In iStation screen, send exam to MedTouch devices.

- DICOM print task: displays DICOM print tasks.
- Task Status

  When there are tasks underway, the task management icon displays as .

  When tasks have failed, the task management icon displays as . Tap the icon to check the reason for the failure.

  When the task management icon displays as , it means no task is underway.
- Troubleshooting

  If a serious error occurs, such as network disconnection or operation timeout, the system can try to reconnect the network. The interval time and maximum retries can be set as desired. For details, see chapter“11 DICOM/HL7”.

10.10 Administration

10.10.1 Access Control

The system supports two types of users: system administrator and operator.

- Administrator

  The system administrator can access all function modules, and view all animal data, such as animal information, images and reports, etc. Only one administrator is configured by default. The administrator can add or delete operators.
- Operator

  The operator can only access the function modules with assigned privileges (for details about privilege assignment, please refer to "10.10.4 Local Privilege Management" and "10.10.5 LDAP Privilege Management"). The operator can only view exam information saved in the system and operated by him or herself, such as animal information, images and reports, etc. The operator cannot view exam data operated by others.

10.10.2 Enabling Access Control

The system administrator can preset the access controls, that is, whether an operator has the right to access data in the system.

Access control only can be set by the system administrator.

Setting access control:

1. Select [Setup] ->[System]-> [Access Control] to enter access control setting screen.
2. If “Enable User Account Control” is selected, you must be authorized before accessing the data, and you can configure password policy and LDAP, and change password. If unselected, you can access all the data without authorization, and you cannot configure password policy and LDAP, and change password.
3. If “Enable Emergency User” is selected, the administrator can edit privileges for emergency users. If unselected, the administrator cannot edit privileges for emergency users.

10.10.3 System Login

If “Enable User Account Control” has been set by the system administrator, you can access data in the system only after logging onto the system.

You must log in again after system restart or dormancy.

- Logging onto the system:

Select the login type (Local or LDAP), and user name from the drop-down list. Enter the password and tap [Log in].

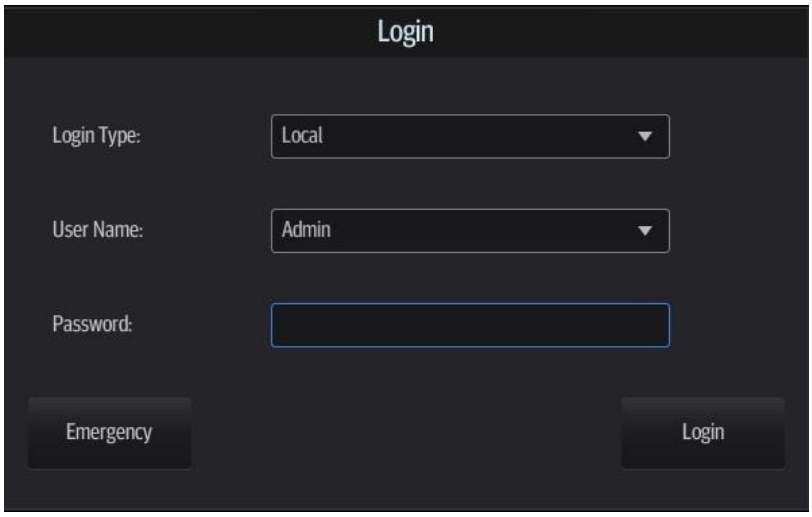

■ To change users:

1. Tap in the top-right corner of the screen and select to bring up the following dialog box:

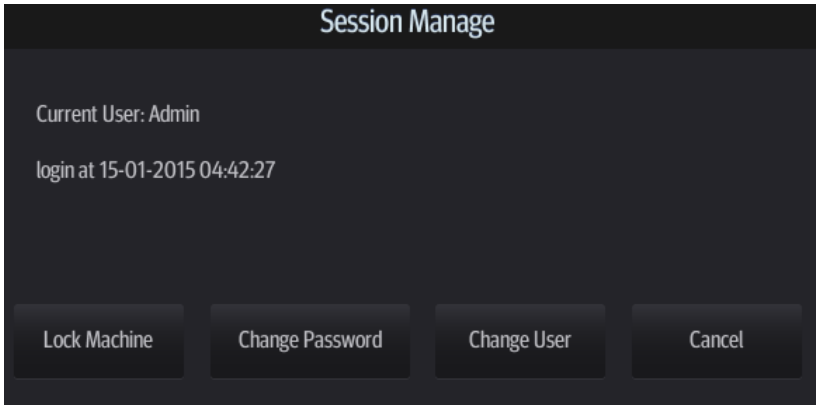

2. Tap [Change User] to bring up the Login dialog box.
3. Select the login type, and user name from the drop-down list.
4. Enter the password and tap [Login].

■ Lock system

1. Tap from the system tool bar in the top-right corner of the screen to bring up the dialog box.
2. Select [Lock Machine] and the system is locked. You must log on before using the system.

10.10.4 Local Privilege Management

The system administrator can add and delete users, and assign privileges, while the operator cannot. The privileges can be assigned through the local system or LDAP server.

Adding a User/Assigning Privilege

Turn on the access control function and log in to the system as Administrator before you add the user.

1. Open the “Access Control” page using the path: [Setup] → [System] → [Access Control].
2. Tap [Add] to bring up the “Adding New User” dialog box.
3. Enter the user name and password, confirm password, and select or deselect the check box from the privilege list. Users can only access the function module with assigned privilege.

4. Tap [OK] to confirm the settings and exit the dialog box. The new user and the privilege will appear in the User List.

■ Deleting a User

Turn on the access control function and log in to the system as Administrator before you delete the user.

1. Open the “Access Control” page using the path: [Setup] → [System] → [Access Control].
2. Select the user to be deleted in the User List. Tap [Delete] to delete the selected user.

■ Editing privilege

Turn on the access control function and log in to the system as Administrator before you edit privileges.

1. Open the “Access Control” page using the path: [Setup] → [System] → [Access Control].
2. Select a user, tap [Edit Privilege] to enter the "Edit user privilege" dialog box, and select or deselect the check box from the privilege list.
3. Tap[OK] to confirm the editing and exit the dialog box. The edited privileges will appear in the User List.

Modify Passwords

The system administrator can modify all user passwords. The administrator password is empty by factory default. You can set this password.

An operator can only modify his/her own password. There are two ways to modify passwords: on the “Access Control” page or in the “Session Manage” dialog box.

■ “Access Control” page (administrators can modify the password)

1. Open the “Access Control”” page using the path: [Setup] → [System] → [Access Control”].
2. Select the user name to be modified in User List. Tap [Change Password] to open the dialog box.
3. Enter the new password and confirm the password, and then tap [OK].

■ Session Manage page (general operators and administrators can modify the password).

1. Tap from the system tool bar in the top-right corner of the screen to bring up the dialog box.
2. Tap [Change Password] to change the password.
3. Enter both the previous and new passwords, and confirm the new password in the dialog box.
4. Tap [OK] to exit.

Configure password policy

Turn on the access control function and log in to the system as Administrator before you configure the password policy.

1. Open the “Access Control” page using the path: [Setup] → [System] → [Access Control]. Tap [Password Policy Config]:

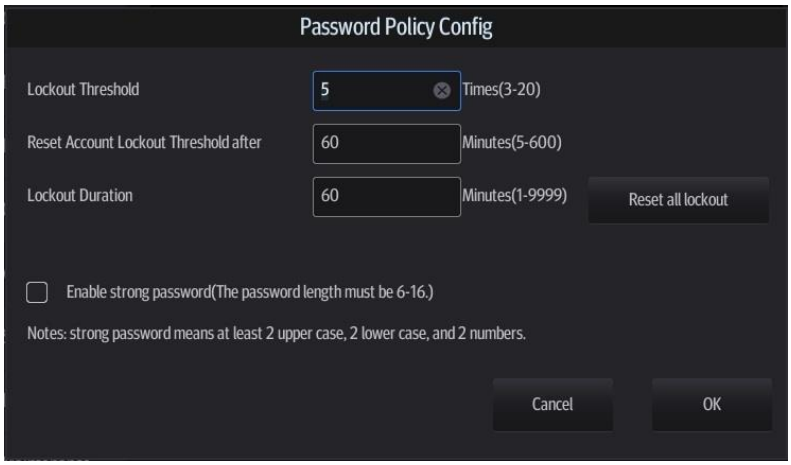

Parameter	Description	Remark
Lockout Threshold	Set the maximum time that a user can input the wrong password. If you exceed the maximum times, your account will be locked.	For example, assume that the "Lockout Threshold" is set to 5, the "Reset Account Lockout Threshold after" is set to 60, and the "Lockout Duration" is set to 60. That is, a user inputs the wrong password for 5 times within 60 minutes, the account is locked, and the user can log in to the system only after 60 minutes. Other users with unlocked accounts can still log in to the system normally.
Reset Account Lockout Threshold after	Set the duration allowed for a user to continuously input the wrong password.	
Lockout Duration	Set the duration after an account is locked.	
Reset all lockout	Reset all locked accounts.	/

Parameter	Description	Remark
Enable strong password	Enable strong password to improve security. ● If the strong password is enabled and you log in to the system with the account that is added before the strong password is enabled, the system prompts a warning message to inform you whether your password conforms to the password policy. 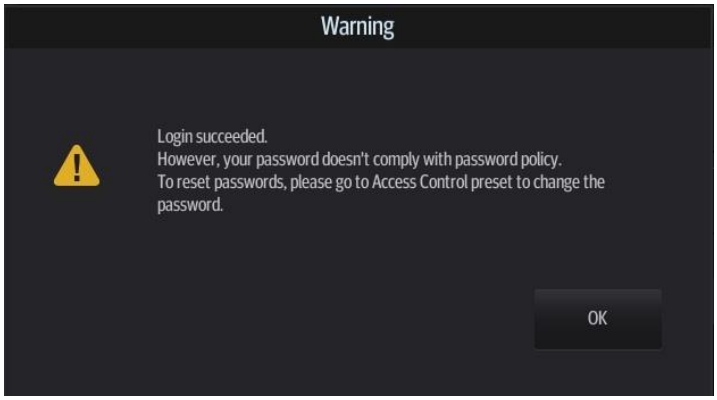 The administrator can change password for administrator or operator via [Setup] →[System]→[Access Control]. ● If the strong password is enabled and you add a new user account, the system prompt an error message to inform you that the password is too weak: 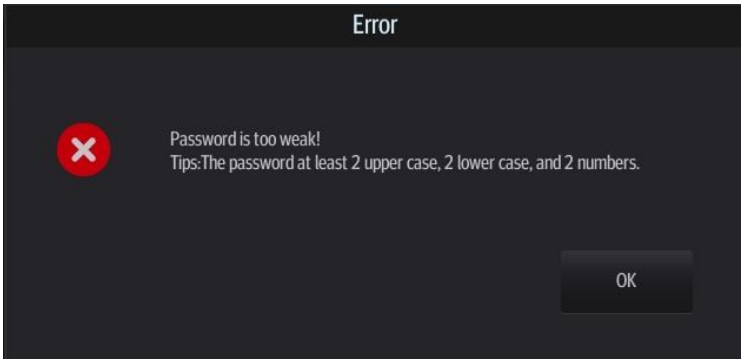 Please modify the password according to the error message.	/

10.10.5 LDAP Privilege Management

Turn on the access control function and log in to the system as Administrator before you edit privileges for the LDAP (Lightweight Directory Access Protocol) users.

1. After accessing the network, enter [Setup] → [System] → [Access Control]→ [LDAP Config].

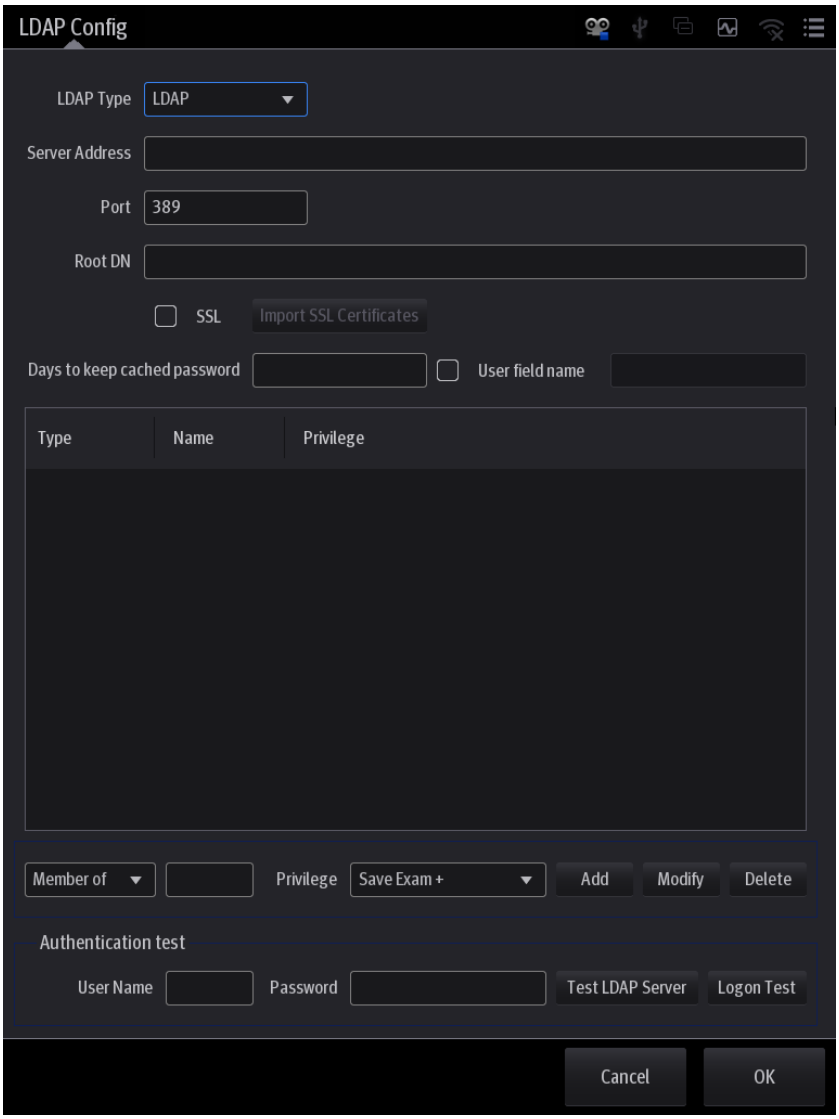

2. Select the LDAP type: LDAP or AD.
3. Enter the server address in the field box.

   If LDAP type is selected, enter “Root DN” at the same time, and you can also import SSL certificates if needed by checking “SSL”.
4. Enter the User name and password in the field boxes of the Authentication test area, and tap [Test LDAP server] to test whether the LDAP server is accessible. If the LDAP is accessible, the system prompts the following message "Server test succeeded."

Item	Description
Days to keep cached password	Set days to keep the cached passwords in the local system Users can log in to the server even without accessing the network within the setting days. ● Empty: the passwords are kept in the local system permanently. ● 0: no passwords are kept in the local system. ● >1: for example, if it is set to 5, the passwords are kept in the local system for 5 days.

Adding a user

1. Enter [Setup] → [System] → [Access Control]→ [LDAP Config].
2. Enter the member name, and select or deselect privileges from the drop-down list of "Privilege".
3. Tap [Add], and the new members and privileges will appear in the Member of filter list.

Deleting a user

1. Enter [Setup] → [System] → [Access Control]→ [LDAP Config].
2. Select a member to be deleted, and tap [Delete].

Modifying the member name or privileges

1. Enter [Setup] → [System] → [Access Control]→ [LDAP Config].
2. Select a member to be modified, modify the member name, and select or deselect privileges from the drop-down list of "Privilege".
3. Tap [Modify], and the modified member name and privileges will appear in the Member of filter list.

Logon test

1. Enter [Setup] → [System Preset] → [Access Control]→ [LDAP Config].
2. Enter the User name and password in the field boxes of the Authentication test area.
3. Tap [Logon Test] to test whether the user is authenticated. After successful authentication, the system prompt the following message:

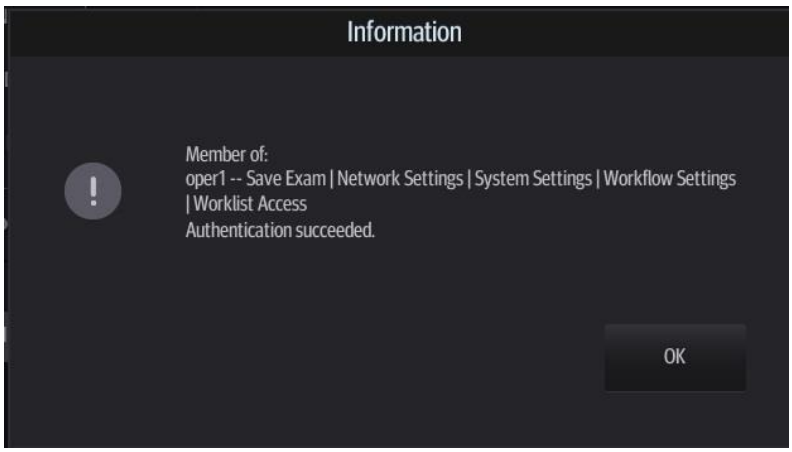

User field name

1. Enter [Setup] → [System] → [Access Control]→ [LDAP Config].
2. Select [Use user field name] to customize the user field name. After that, the members and privileges cannot be edited.
3. Enter the user field name in the field box of the "User field name" (the user field names are configured in the LDAP server. For details, please refer to the LDAP server manual).

10.10.6 User field name

The user field name corresponding to privileges are as follows:

Privilege	User field name
iStation Access	1
Save Exam	2
Export Exam	4
Network Settings	8
Maintenance Menus	16
System Settings	32
Workflow Settings	64
Worklist Access	128

Note: the privilege items can be combined randomly. For example, if user A is assigned with all the above 8 privileges, the user field name for user A is 1+2+4+8+16+32+64+128=255.

10.11 V-Access

The ultrasound system can be used to log on to a remote server to check or modify animal data on the server.

1. Tap from the system tool bar in the top-right corner of the screen to enter the function.
2. The system brings up a dialog box for entering the IP address of the remote server.

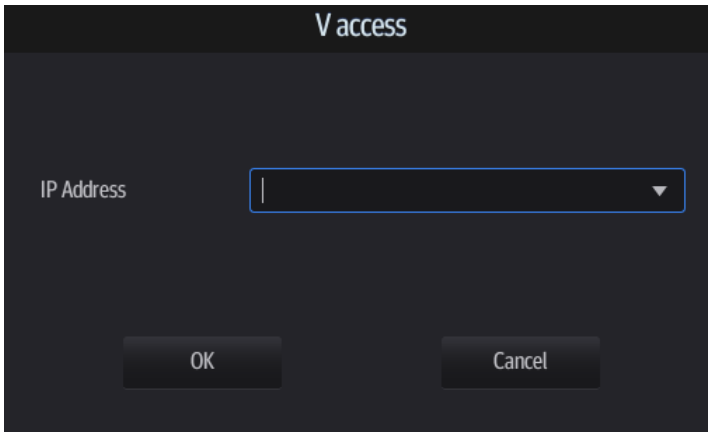

3. Enter the IP address and tap [OK].
4. Log on with the server account and password.
5. Check the data transferred and carry out operations as necessary.

10.12 Q-Path

NOTE:	When logging on the Q-path service, the ultrasound system is connected to the external network and it may be infected by virus. Please do not access the unrelated website or perform any unrelated operations. If abnormal data or link is discovered after logging on the Q-path service, please stop operation and contact the Q-path service provider.

10.12.1 Overview

You can use the ultrasound system to check data on browser directly. After you have ordered storage service of a network website service, you can check data using the website, authorized account and password (provided by the service vendor).

Q-path is a network server provided by Telexy Healthcare Inc. for digital image storage. For details, please contact Q-Path service provider.

10.12.2 Q-Path Basic Procedure

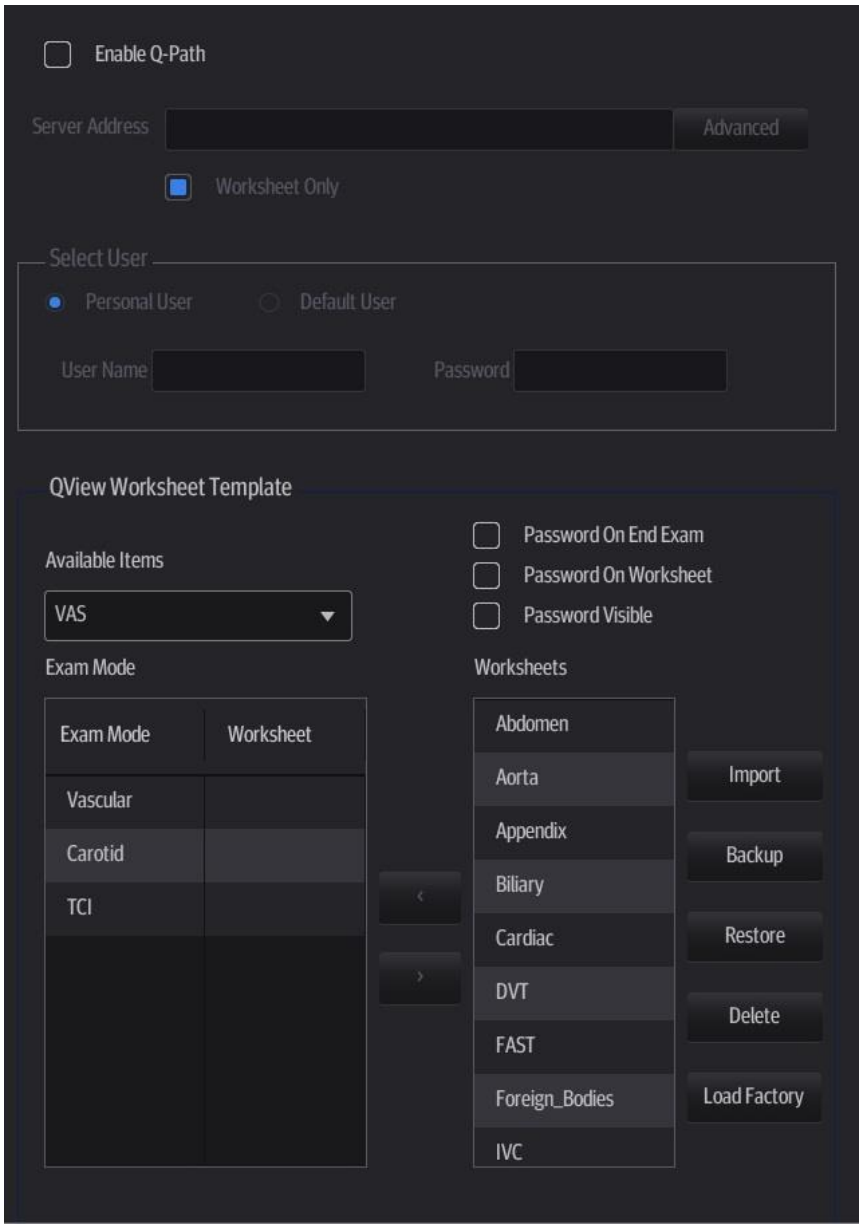

1. Set related setting in the path: [Setup] ->[Network] -> [Q-Path].
   a) Select "Enable Q-Path" in the path;
   b) Enter the website, account and password of the target service.
2. Select user type: Personal User or Default User.
   - Personal User: the personal user needs to enter the user name and password in every-time login.

- Default User: after the default user enters the user name and password in the field box of the "User Name" and "Password", and tap [Save], no login is required to access the Q-Path server later.

3. Select an appropriate item from the drop-down list of "Available Items"
4. Select an exam mode in the left "Exam Mode" column.
5. Select a worksheet in the right "Worksheets" column.
6. Tap [Save] to exit, and the system will shut down.

Parameter	description
Advanced	Sets the sub URLs of "QView full" and "QView lite". The sub URL is set by default. Users can modify the sub URL and tap [Apply] to exit the "QView sub URL setting" window.
Worksheet Only	Sets whether to directly enter the Worksheet interface after opening the Q-Path server.
Password On Worksheet	Sets whether to display the Signature field box in a worksheet. Tap [Report]→[WorkSheet] or tap [Review] → [Report] → [WorkSheet], enter the worksheet password in the field box, and tap [OK].
Password On End Exam	Sets whether to input the worksheet password after ending an exam.
Password Visible	Sets whether the password is visible.
Import	Imports a user-defined worksheet template from the USB storage (downloaded from the Q-Path server).
Backup	Backs up worksheets to the USB storage.
Restore	Restores the backup worksheet template from the USB storage to the ultrasound system.
Delete	Deletes a worksheet template.
Restore Factory	Restores the worksheet template to the default state.

The operating procedures are as follows:

1. Set the DICOM storage server. For details, please refer to "11.1.3.1 Storage Service Preset ".
2. Send stored images or worksheet reports from iStation/Review/thumbnail area to the Q-Path server. For details, please refer to the "11.3.1 DICOM Storage".
3. Tap in the top-right corner of the screen and select .
4. Log in to the Q-Path server through the Q-View browser to check the stored images and worksheet reports.

   Tips:

   If network connection is not normal, the system will prompt “Loading Q-path application, please wait....”.
5. Tap X to exit the function.

NOTE:	If you use Q-Path function to connect to websites other than Q-Path applications (website setting is described above), the system will prompt the following information: Only Q-Path application is allowed to be loaded!

11 DICOM/HL7

NOTE:	Before using DICOM, read the DICOM CONFORMANCE STATEMENT electronic file provided with the device.

The chapter is restricted to the preset, connection verification and DICOM services of the DICOM-configured ultrasound machine, and does not include SCP configurations such as PACS/RIS/HIS.

The DICOM package is optional. For details, see “2.4.3 Options”.

This system supports the following DICOM functions:

- Verify Connectivity
- DICOM Storage
- DICOM Print
- DICOM Worklist
- MPPS (Modality Performed Procedure Step)
- Storage Commitment
- Query/Retrieve
- Structured Report
- DICOM Medium Storage (DICOMDIR Review)
- DICOM Task Management

DICOM Preset and Applications workflows are briefly described as follows:

1. DICOM preset (network property, DICOM local preset, server and service preset).
2. Verify connectivity(tap [Verify] in corresponding screen).
3. Services application.
4. DICOM task management.

■ Terms

Abbreviations	Description
DICOM	Digital Imaging and Communications in Medicine
AE	Application Entity
MPPS	Modality Performed Procedure Step
PDU	Protocol Data Unit
SCU	Service Class User (DICOM client)
SCP	Service Class Provider (DICOM server)
SOP	Service-Object Pair
TLS	Transport Layer Security

11.1 DICOM Preset

11.1.1 IP Preset

If wireless network connection is used, see chapter “Appendix A Wireless LAN” for details.

If wired network connection is used, please follow the steps below to do the configuration.

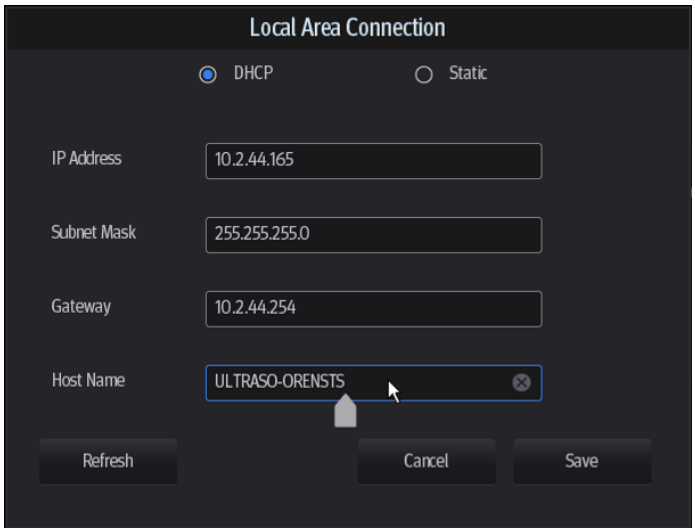

1. Tap in the top-right part of the screen to open the local connection dialogue box.
2. Select DHCP/ Static for the network.
3. Tap [Save] to exit the dialogue box after finishing the setting.

11.1.2 DICOM Local Preset

1. Enter the DICOM local preset screen using the path: [Setup] -> [Network].
2. Enter AE Title, Port and PDU according to the actual situation, then tap [Save] to exit the screen. Setting items are introduced in the following.

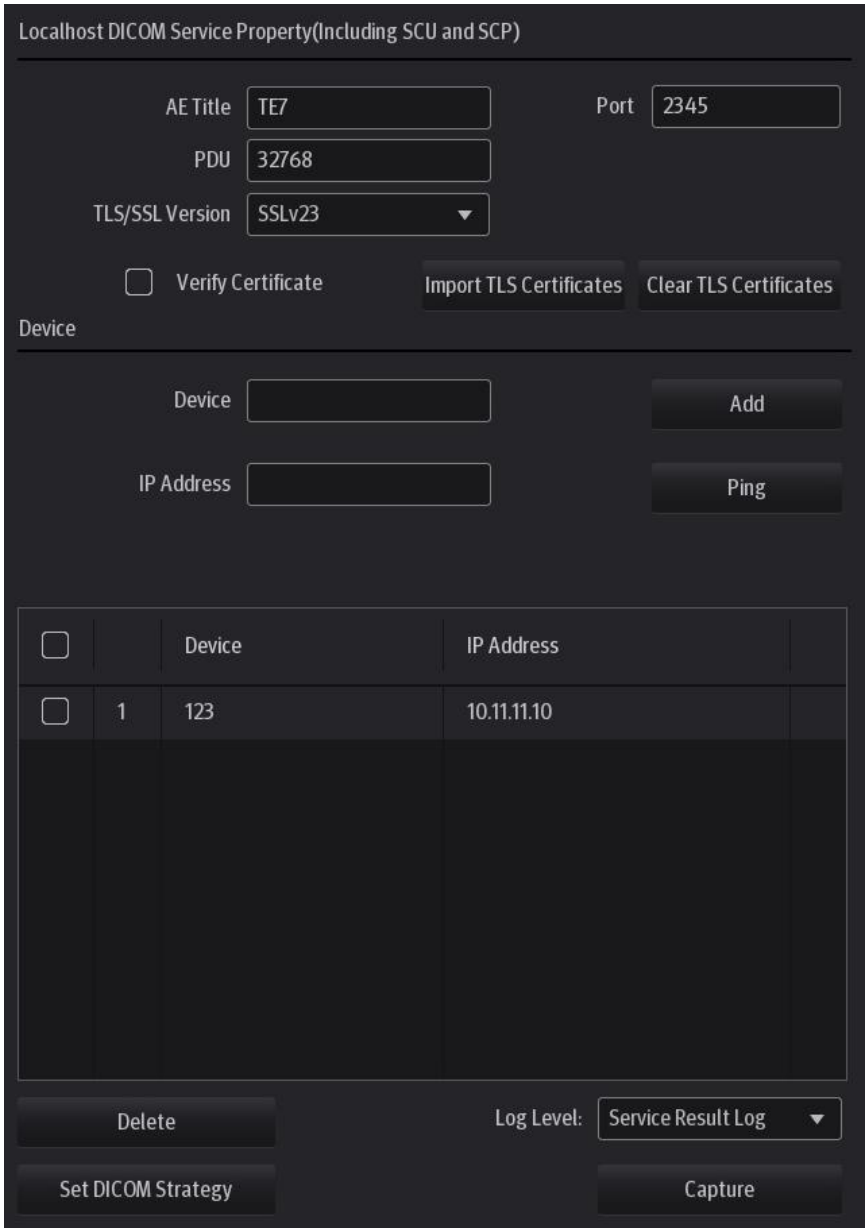

Name		Description
DICOM Local	AE Title	Application Entity title.
	Port	DICOM communication port.
	PDU	Maximum PDU data package size, ranging from 16384 to 65536. If the value is less than 16384 or greater than 65536, the system automatically sets it to the value 32768.
	TLS/SSL Version	Select an appropriate TLS/SSL version. SSLv23 is set by default.
	Verify Certificate	After importing TLS certificates, and selecting this check box, the system verifies the effectiveness of the TLS function in the DICOM storage, print, and worklist services.
	Import TLS Certificates	Import trusted certificates.
	Clear TLS Certificates	Clear all certificates
Server Setting	Device	Name of the device supporting DICOM services.
	IP Address	IP address of the server.
	Ping	You can ping other machines after entering the correct IP address. You can also select a server in the device list below to ping it.
	Add	Select to add servers to the device list.
	Delete	Select to delete selected servers from the device list.
	Log Level	For engineer use only.
	Capture	

■ Server setting procedure:

1. Enter the server device name and IP address. Tap [Ping] to check the connection.
2. Tap [Add] to add the server to the device list. Its name and address are displayed in the list.

Tip:
The AE Title should be the same as the SCU AE Title preset in the server (PACS/RIS/HIS). For example, if the AE Title of the server preset in the storage server is Storage, and the AE Title of the accepted SCU is preset as Machine, then in the figure above, the AE Title of Local should be Machine, and the AE Title of the storage server should be Storage.

■ Set DICOM Strategy:

TIP:

- The DICOM strategy must be configured by qualified personnel with good knowledge of DICOM standards.
- The qualified personnel must ensure the validity of the DICOM strategy

Perform the following procedure:

1. Tap [Set DICOM Strategy].
2. Edit the DICOM strategy:
   - Add: Enter strategy name and description, and tap [Add] to add a new strategy. Then the added strategy will be added to the Strategy List.
   - Delete: Select a strategy from the Strategy List, and tap [Delete].

- Update: Select a strategy from the Strategy List, re-enter strategy name or description, and tap [Update].

3. Configure the item:

   Select a strategy name from the Strategy List, and assign strategy items to the selected strategy.

   - Add: Set the function from the drop-list box, enter the parameter 1 and parameter 2, and tap [Add]. Then the added strategy item will be added to the Strategy Items List.
   - Delete: Select a strategy item from the Strategy Items List, and tap [Delete].
   - Update: Select a strategy from the Strategy Items List, reselect the function or re-enter the parameter 1/2, and tap [Update].

4. Import/Export strategy:

   - Import: Tap [Import], browse the desired strategy file and operate according to the screen prompts to import. The imported file for DICOM strategy must be a *.xml file.
   - Export: Select a strategy from the Strategy List, tap [Export] and then select the export path and type the file name.

11.1.3 Service Preset

The DICOM Service screen is used to set Storage, Print, Worklist, MPPS, Storage Commitment and Query/Retrieve attributes.

When the system is configured with the DICOM basic function module, and installed with DICOM Worklist, MPPS, DICOM structured reports and DICOM query/retrieve modules, the corresponding preset can be found in the DICOM Service screen.

To open the DICOM Service screen:

Select [DICOM/HL7] in the [Setup] ->[Network] menu and select corresponding tabs to enter the screen.

11.1.3.1 Storage Service Preset

1. On the DICOM/HL7 screen, select the [Storage] page tab to enter the Storage page.
2. Select a device and enter the correct AE Title, port, etc.
3. Tap [Add] to add the service to the Service List.

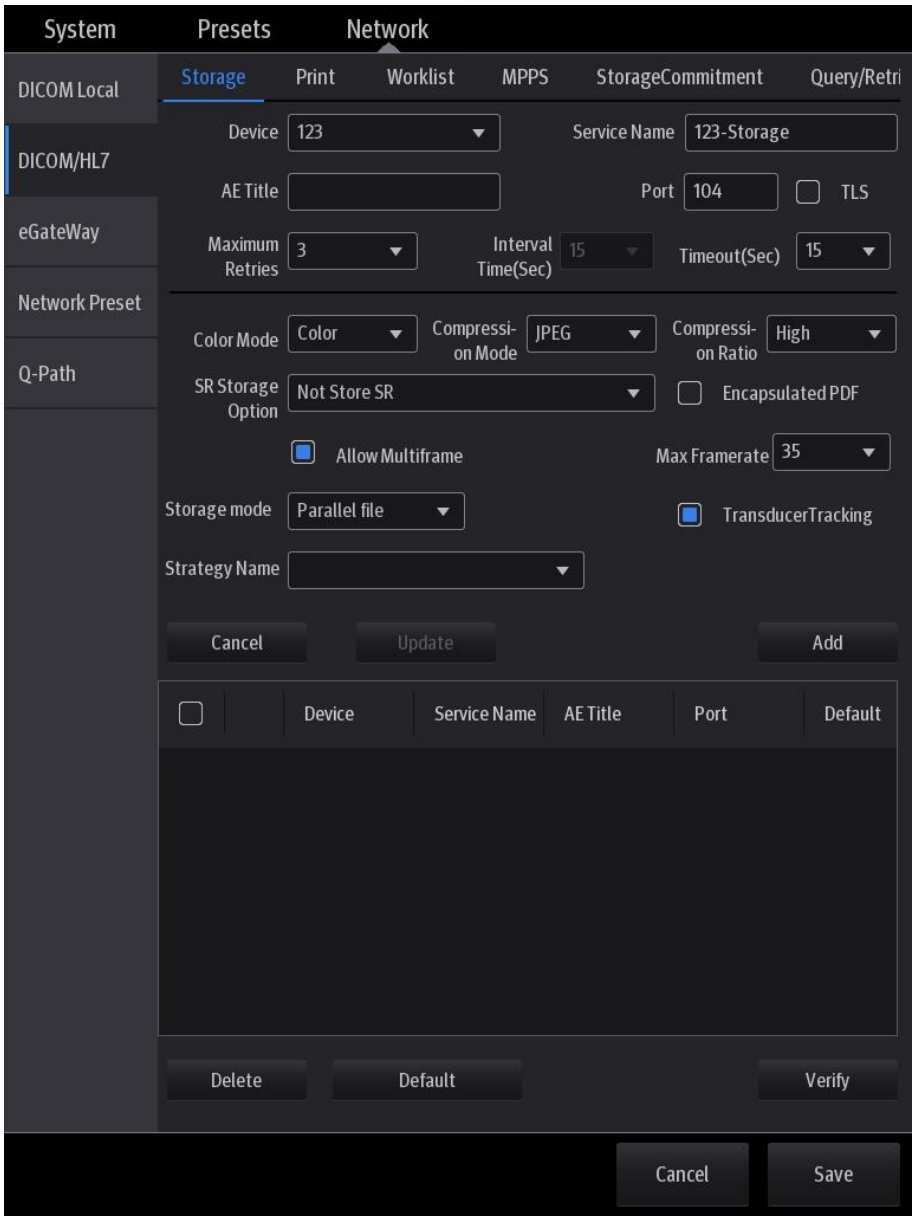

DICOM storage preset items are described as follows:

Name		Description
Configure New Service	Device	After setting the servers in the DICOM local screen, the names will appear in the drop-down list. Select the name of the storage server.
	Service Name	The default is xxx-Storage, user-changeable.
	AE Title	Application Entity title. It should be consistent with that of the storage server.
	Port	DICOM communication port, 104 is the default. The port should be consistent with that of the storage server port.
	TLS	Select whether to encrypt the data during network transportation.
	Maximum Retries	Set the maximum retries.
	Interval Time(Sec)	Reserved.
	Timeout (Sec)	Refers to the amount of time after which the system will stop trying to establish a connection to the service.
	Color Mode	Select the color mode.
	Compression Mode	Select the Compression mode: uncompressed, RLE, JPEG and JPEG2000.
	Compression Ratio	Select the JPEG Compression ratio: lossless, low, medium and high.
	Allow Multiframe	If SCP supports this function, select it.
	Max Frame Rate	Set the frame range for transferring cine files to DCM multi-frame files.
	SR Storage Option	Select structured report sending options.
	Encapsulated PDF	Select whether to encapsulate PDF format reports in DICOM standard.
	Storage mode	Set the storage mode for image and cine file: Parallel file: save the current file, and is ready for the storage of the next file. Parallel frame: send the current frame, and is ready for sending the next frame.
	Transducer Tracking	Files of images that are saved in DCM format through DICOM contain transducer serial number information.
	Strategy Name	Select the DICOM strategy.
	Add	Add the DICOM service to the service list.
	Cancel	Select to cancel parameter setting.
	Update	Select an item in the service list, change the parameters in the above area, and tap [Update] to update the item in the service list.
Service List	Delete	Select to delete the selected service from the service list.
	Default	Select an item in the service list. Tap [Default] and you will see “Y” in the Default column.

Name		Description
	Verify	Select to verify that the two DICOM application entities are properly connected.

Tip: RLE, JPEG and JPEG2000 are not supported by all SCPs. Refer to the SCP's DICOM CONFORMANCE STATEMENT electronic file to check whether SCP supports it or not. Do not select these Compression modes if the storage server does not support them.

- Images of PW/M mode (B image is not frozen) and images other than PW/M mode: if “Max Frame rate” is not “Full” and the actual frame rate is larger than the set value, the system will save the image files in a frame rate of the set value, and transfer in a frame rate of B mode.
- Images of PW/M mode (B image is frozen), the system will save/transfer the images files in frame rate of 6.

11.1.3.2 Print Service Preset

1. On the DICOM/HL7 screen, select the [Print] page tab to enter the Print page.
2. Select a device and enter the correct AE Title, port, etc.
3. Tap [Add] to add the service to the Service List.

Storage
Print
Worklist
MPPS
StorageCommitment
Query/Retri
Device
123
Service Name
123-Print
AE Title
Port
104
TLS
Maximum Retries
3
Interval Time(Sec)
15
Timeout(Sec)
15
Copies
1
Settings
RGB
Film Orientation
PORTRAIT
Film Size
8INX10IN
Display Format
STANDAR...
Priority
HIGH
Medium Type
PAPER
Destination
MAGAZINE
Trim
NO
Min Density
0
Max Density
300
Magnificat-ion Type
NONE
Strategy Name
Configuration Info
Cancel
Update
Add
Device
Service Name
AE Title
Port
Default
Delete
Default
Verify

DICOM print preset items are described as follows:

Name		Description
Configure New Service	Device	After setting the servers in the DICOM local screen, the names will appear in the drop-down list. Select the name of the print server.
	Service Name	The default is xxx-Print, user-changeable.
	AE Title	Application Entity title. It should be consistent with that of the print server.
	Port	DICOM communication port, 104 is the default. The port should be consistent with that of the print server port.
	TLS	Select whether to encrypt the data during network transportation.
	Maximum Retries	Set the maximum retries.
	Interval Time(Sec)	Reserved.
	Timeout(Sec)	Refers to timeout during association establishment.
Print Properties	Copies	See copies of printed files. You can select from 1 to 5, or directly enter the number.
	Settings	The system supports RGB (color printing) and MONOCHROME2 (black and white printing). Please select the type the printer supports.
	Film Orientation	Select from between LANDSCAPE and PORTRAIT.
	Priority	Specify printing task priority from HIGH, MED and LOW.
	Film Size	Select film size from the selections listed in the drop-down list.
	Display Format	Specify the quantity of printed files, e.g., STANDARD\3, 2 indicates 6 images are printed for each page.
	Medium Type	Specify print medium: Paper, Clear Film, Blue Film. Select Blue Film or Clear Film for black and white printing; select Paper for color printing.
	Trim	Specify whether you want a trim box to be printed around each image on the film: Yes or No.
	Configuration Info	Enter configuration information in the field.
	Min. Density	Enter the minimum density of the film.
	Max. Density	Enter the maximum density of the film.
	Destination	Specify where the file is exposed: MAGAZINE (stored in the magazine) or PROCESSOR (exposed in the processor).
	Strategy Name	Select the DICOM strategy.

Name		Description
	Magnification Type	Select how the printer magnifies an image to fit the film. Replicate: interpolated pixels belong to duplicates of adjacent pixels) Bilinear: interpolated pixels are generated from bilinear interpolations between adjacent pixels Cubic: interpolated pixels are generated from cubic interpolations between adjacent pixels None: without interpolation.
	Add	Add the DICOM service to the service list
	Cancel	Select to cancel parameter preset.
	Update	Select an item in the service list, change the parameters in the above area, and tap [Update] to update the item in the service list.
Service List	Delete	Select to delete the selected service from the service list.
	Default	Select an item in the service list. Tap [Default] and you will see “Y” in the Default column.
	Verify	Select to verify that the two DICOM application entities are properly connected.

11.1.3.3 DICOM Worklist Preset

1. On the DICOM/HL7 screen, select the [Worklist] page tab to enter the Worklist page.
2. Select a device and enter the correct AE Title, port, etc.

   You can preset what DICOM elements that will not be used in worklist query by using [Remove Attributes( )] button.
3. Tap [Add] to add the service to the Service List.

The DICOM Worklist service parameters are similar to those described in DICOM Storage Preset. See “11.1.3.1 Storage Service Preset” for details.

11.1.3.4 MPPS Preset

1. On the DICOM/HL7 screen, select the [MPPS] page tab to enter the MPPS page.
2. Select a device and enter the correct AE Title, port, etc.
3. Tap [Add] to add the service to the Service List.

The DICOM MPPS service parameters are similar to those described in DICOM Storage Preset. See “11.1.3.1 Storage Service Preset” for details.

11.1.3.5 Storage Commitment Preset

1. On the DICOM/HL7 screen, select the [Storage Commitment] page tab to enter the Storage Commitment page.
2. Select a device and enter the correct AE Title, port, etc.
3. Tap [Add] to add the service to the Service List.

A special setting item for the DICOM Storage Commitment service is the Associated Storage Service, as described in the following. Other parameters are similar to those described in DICOM Storage Preset. See “11.1.3.1 Storage Service Preset” for details.

Name	Description
Associated Storage Service	The associated storage server should be preset before storage commitment. Storage commitment can only be created after the exam is sent out.

11.1.3.6 Query/Retrieve Preset

1. On the DICOM/HL7 screen, select the [Query/Retrieve] page tab to enter the Query/Retrieve page.
2. Select a device and enter the correct AE Title, port, etc.
3. Tap [Add] to add the service to the Service List.
4. Tap [Exit] to confirm the preset and exit the page.

The DICOM Query/Retrieve service parameters are similar to those described in DICOM Storage Preset. See “11.1.3.1 Storage Service Preset” for details.

11.1.3.7 HL7Query Preset

HL7 protocol, enacted by Health Level Seven organization in 1987, is a 7th layer (application layer) based on the OSI model (Open System Interconnection) released by ISO (International Standard Organization).HL7 is used to rule and manage communications between HIS/RIS system and devices, as well as reduce the intercommunication cost.

The following HL7 protocol versions are supported in the ultrasound system: V2.3, V2.4, V2.5 and V2.6.

1. On the DICOM/HL7 screen, select the [HL7Query] page tab to enter the HL7Query preset page.
2. Select a device and enter the correct AE Title, port, etc.
3. Tap [Add] to add the service to the Service List.

Two special setting items for the HL7Query service are the Listen Port and Listen Mode, as described in the following. Other parameters are similar to those described in DICOM Storage Preset. See “11.1.3.1 Storage Service Preset” for details.

“Verify” function is not available under HL7Query preset.

Name	Description
Listen Mode	This function enables the ultrasound system to use the listen port for data receiving.
Listen Port	Port for ultrasound system to receive data after the listen mode function is activated. Here, the port should be consistent with that of the Worklist server port. For details of listen port setting, refer to settings in the server.

11.2 Verify Connectivity

To verify connectivity (not essential), tap [Verify] on the Storage, Print, Worklist, MPPS, Storage Commitment and Query/Retrieve pages respectively.

If the verification is successful, the system displays “xxx Verify Succeed.” Otherwise, it displays “xxx Verify Failed.”

If verification failed, possible causes may be:

- The ultrasound machine cannot communicate normally with the server. Check that the cable is properly connected, or,

Check that the IP of the server is configured in the same segment as that of the ultrasound machine, or,

Check that the network adapter, router, exchanger and HUB are working normally.

- The server does not support the verification. If the connection is normal, it can be concluded that the server does not support the verification.
- The server supports the verification, but this function is not activated. Please check that the verification function is activated.

Tip:

Not all SCPs can support verification. See the SCP properties to confirm whether the SCP can support this service. If not, the verification will not be successful.

11.3 DICOM Services

If all the DICOM presets on the DICOM Service Preset screen are completed, you are ready for the Storage, Print, Worklist, MPPS, Storage Commitment and Query/Retrieve applications.

11.3.1 DICOM Storage

DICOM Storage is used to send images to the DICOM storage server for storage.

■ Send images on iStation/Review

1. Select images
   - Tap [iStation] on the left side of the operating panel to open the iStation screen. Tap to select an exam record in the list. Or
   - Tap [Review] on the left side of the operating panel to enter the Review screen. Tap to select a thumbnail or several thumbnails.
2. Tap [Send To] to bring up the following dialog box.

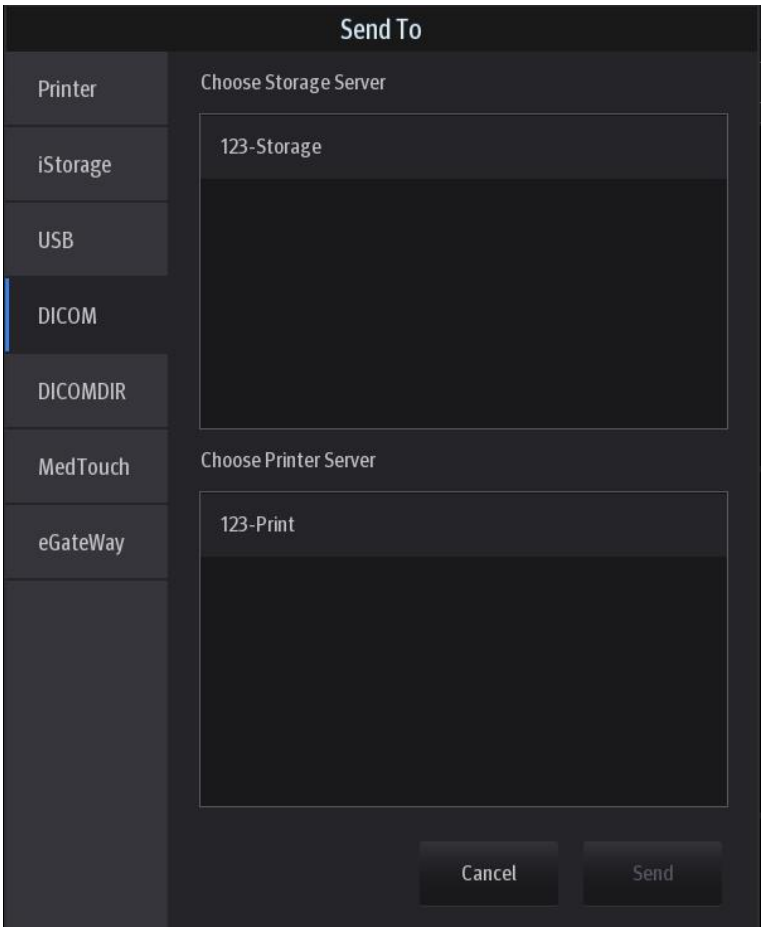

3. Tap to select “DICOM” in the Target box on the left side, then select the DICOM storage server in the Choose Storage Server box on the right side.
4. Tap [Send] to start sending.

■ To send images to storage after an exam ends

1. Select [Setup] -> [System]-> [General] and then check [Sending/Printing after End Exam] in the Animal Info area.
2. Set a default storage server:
   a) Enter the DICOM Service Preset screen via [Setup] -> [Network] → [DICOM/HL7].
   b) Select a storage server in the Service List and tap [Default]. You will see “Y” in the Default column.
   c) Tap [Exit] to exit the page and return to the Setup menu, then tap [Save] on the Setup menu to make the preset take effect.
3. After finishing the presets, perform image scanning. Each time [End] is tapped, the system will send the image to the default DICOM storage server for storage.

If images are successfully sent to the storage server, in the iStation screen, "Send to PACS,OK" is displayed in the list below "Storage Commitment".

11.3.2 DICOM Print

DICOM Print is used to send images to the DICOM print server for printing.

■ Print images on iStation/Review

1. Select images. Operations are the same as for DICOM storage.
2. In the Send To dialog box, select a DICOM print server.

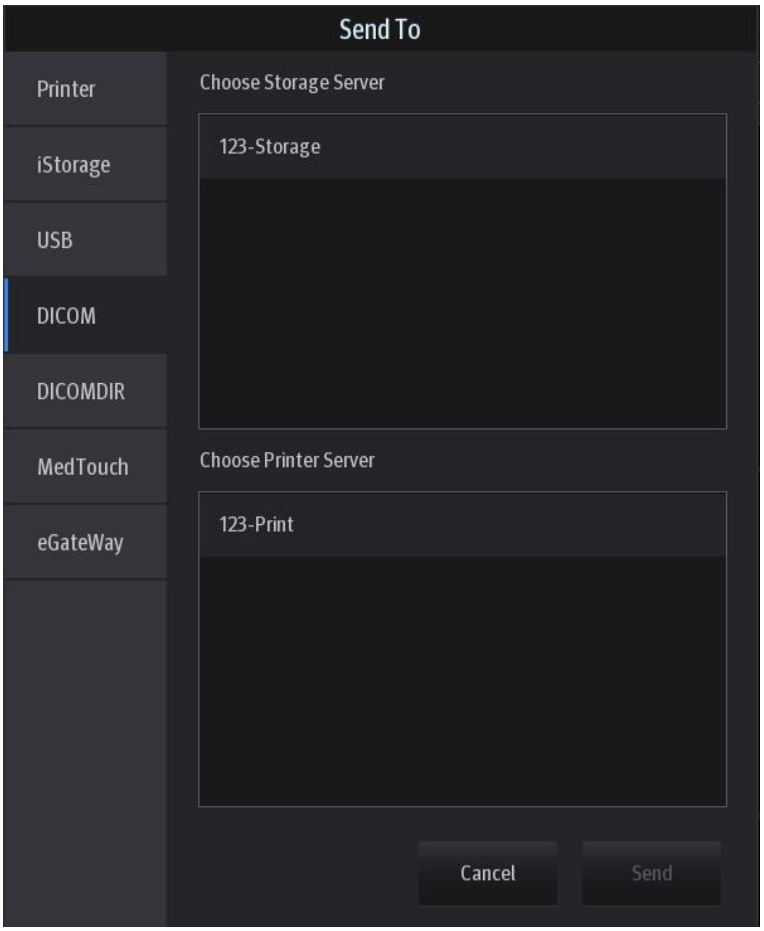

3. Tap [Send] to begin printing.

■ To send image to DICOM print after an exam ends

1. Select [Setup] ->[System]-> [General] and then check [Sending/Printing after End Exam] in the Animal Management area.
2. Set a default print server.
   a) Enter the DICOM Service Preset screen via [Setup] -> [Network] -> [DICOM/HL7].
   b) Set default DICOM printer. For details, see chapter “11.1.3.2 Print Service Preset”.
3. After finishing the setting, perform image scanning. Each time [End] is tapped, the system will send the image to the default DICOM print server for printing.

■ To print images after saving image

1. Select [Setup] ->[System]-> [General] and then check “While Storing Image to Hard Disk, Send to DICOM Printer.
2. Set a default print server.
   a) Enter the DICOM Service Preset screen via [Setup] -> [Network] -> [DICOM/HL7].
   b) Set default DICOM printer. For details, see chapter “11.1.3.2 Print Service Preset”.
3. After finishing the setting, perform image scanning. Each time you use [Save Image] to save image, the system will send the image to the default DICOM print server for printing.

11.3.3 DICOM Worklist

For details, see “4.1.2.2 Retrieve from Worklist”.

11.3.4 MPPS

MPPS is used to send exam state information to the configured server. This facilitates the other systems in obtaining the exam progress in time.

The status information is described as follows:

- When you begin an exam or send images during an exam, the system sends “Active” status information to the MPPS server.
- When the exam is complete, the system sends “End” status information to the MPPS server.
- When a paused exam is continued, the system sends “Active” status information to the MPPS server.
- When an exam is canceled, the system sends “Canceled” status information to MPPS server.

11.3.5 Storage Commitment

Storage commitment is used to confirm whether the images or structured reports are successfully stored on the DICOM storage server.

Before using storage commitment, set the associated storage service.

■ Storage commitment after sending images on the iStation screen.

1. Open the iStation screen.
2. Select an exam (a suspended exam or an inactive exam) (images are stored in the exam record). Tap [Send To] to open the Send To dialog box.
3. Tap to select “DICOM” in the Target box on the left side, then select the DICOM storage server in the Choose Storage Server box on the right side.
4. Tap [Send] to start sending. The system will send all the images stored in the exam record to the storage server. Meanwhile, it will send storage commitment to the storage commitment server.

■ To send storage commitment after an exam ends

1. Select [Setup] ->[System]-> [General], then check [Sending/Printing after End Exam] in the Animal Management area.
2. Set the default storage server and storage commitment server.
   a) Enter the DICOM Service Preset screen via [Setup] -> [Network] -> [DICOM/HL7].
   a) Set a default server in the Storage page and set the associated storage service in Storage Commitment page.
   b) Tap [Save] on the Setup menu to make the preset take effect.
3. After finishing the presets, perform image scanning. Each time [End] is tapped, the system will send the image to the default DICOM storage server for storage and send storage commitment to the storage commitment server.

   If images are successfully sent to the storage server, in the iStation screen, "PACS received，OK" is displayed in the list below "Storage Commitment".

   Tip:

   Storage commitment is confined to the whole exam. Single image sending cannot be indicated.

NOTE:	Multi-frame storage is not allowed if “Allow Multiframe” is not selected ([Setup]-> [Network] -> [DICOM/HL7] -> “Storage”). For example, even if there is a multi-frame file in the exam to be sent, only single-frame image storage will be performed.

11.3.6 Query/Retrieve

The query/retrieve function is used to query and retrieve animal exam records in a designated server.

After setting the DICOM query/retrieve server, you can perform the query/retrieve function in the iStation screen.

1. Open the iStation screen: Tap [iStation] on the left side of the operating panel.
2. Tap [Query/Retrieve] to open the screen.

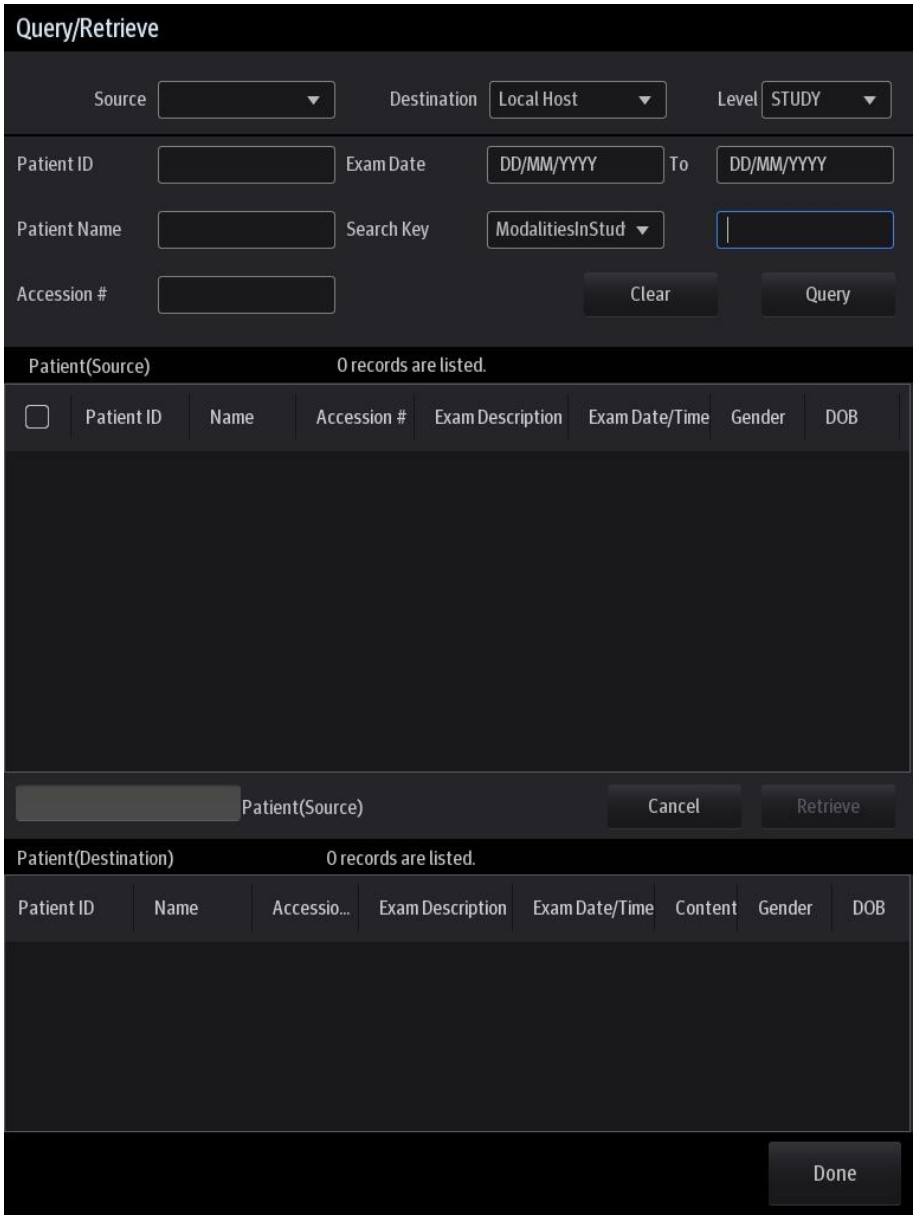

3. Select the server (both the source and the destination).
4. Enter the query information, such as Animal ID, Animal Name, Accession #, Exam Date or keywords.

   Tap [Clear] to empty the entered query information.
5. Tap [Query]. The system performs the query and lists the results in the animal (source) list.

   You can perform further queries based on the results by entering new query information.
6. Select animal records according to the actual situation.
7. Tap [Retrieve] to retrieve the animal records in the DICOM query/retrieve server to the local machine.

8. Tap [Done]. The retrieved animal records are listed in the iStation screen.

11.4 DICOM Media Storage

Animal data in the ultrasound system can be saved on external media in DCM format, while DCM files can be accessed in the ultrasound system.

Media Storage

1. Select animal records in the iStation screen.
2. Tap [Send To] to open the following dialogue box.

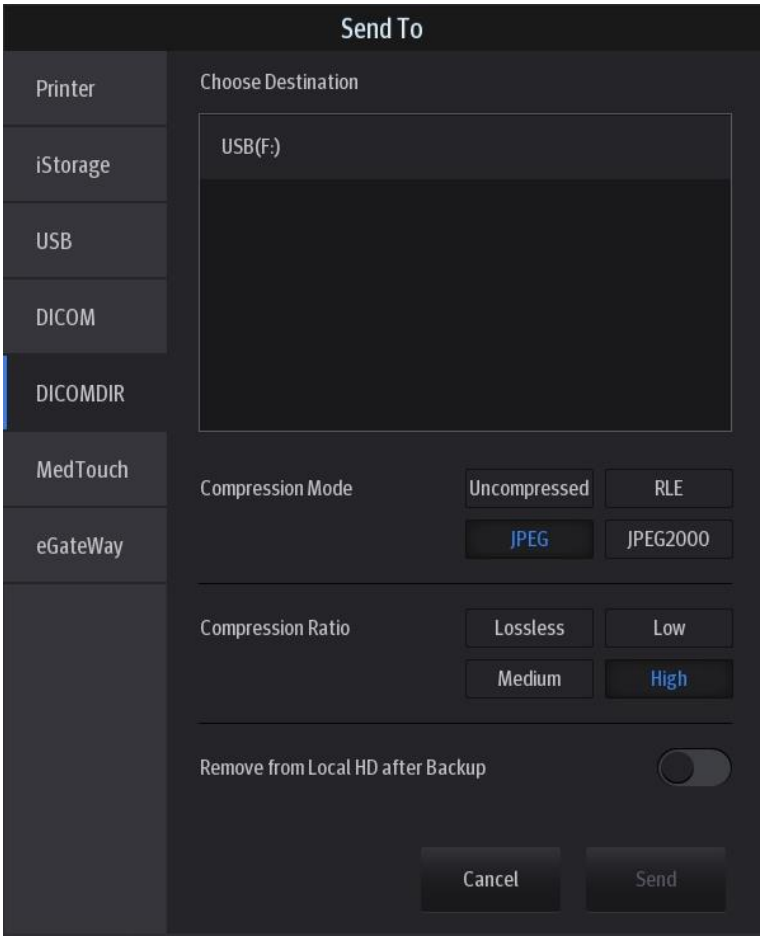

3. Select the destination to “DICOMDIR” and DICOM Format as well as Compression mode.
4. Set whether to remove the animal data from the local hard disk after backup (remove exams or just remove the images).
5. Tap [Send] to begin the storage.

If the backup is successful, a tick will appear in the Backup list in the iStation screen. If not, there will be no tick.

There must be no DICOMDIR/DCMIMG/IHE_PDI files on the external storage media of the same name as the one being backed up. Otherwise, the backup cannot proceed. Ensure there is enough storage space, or the backup may fail due to shortage of space.

Data Restore

After the DICOM format data are saved to external media, restore the data to the ultrasound system.

1. Connect the external media containing DCM files to the system.
2. In iStation, review the data stored on the external media.

3. Select the data to be restored in iStation.
4. Select [Options] -> [Restore] on the iStation screen.

NOTE:	Only system-accessible media can be selected.

11.5 Structured Report

DICOM Reproduction SR, Cardiac Structured reports, Vascular Structured reports and Breast Structured reports are supported by this system.

■ Send images and structured reports for storage in the iStation screen

1. Select “Attach SR When Storing Images” or “Only Store SR” on the DICOM Storage preset page. For details, see “11.1.3.1 Storage Service Preset.”
2. Create new animal information or load scheduled animal information.
3. Perform measurements.
4. Save the images.
5. End the exam.
6. Open the iStation screen, select the animal exam, and tap [Send To] to open the Send To dialog box.
7. Select “DICOM” in the Target box on the left side, then select the DICOM storage server in the Storage Server box on the right side.
8. Tap [Send]. Check for the result in the DICOM Task Management dialog box.

   The structured report can be sent automatically. For details, see “11.3.1 DICOM Storage.”

■ Back up structured report

When recording or storing exams that have structured reports to external media (DICOMDIR), the structured reports can be backed up together.

NOTE:	Only the PACS system from the Medstreaming company (http://www.medstreaming.com/default.aspx) supports sending self-defined measurements by DICOM SR.

11.6 DICOM Task Management

DICOM Task Management is used for viewing task progress or managing tasks after sending images for storage, printing or media storage. For details, see “10.9 Animal Task Management.”

12 Setup

The Setup function is designed to set the configuration parameters of operating the system and maintaining user workflow setup data. The setup data of the user and system are stored on the hard drive, and should be backed up to CD/DVD or USB memory device.

⚠**CAUTION:**	**When the preset data is changed, be sure to save the preset data according to the methods described in this chapter. Mindray Animal Medical is not responsible for the loss of preset data.**

- To enter Setup: Tap in the top-right corner of the screen and select to enter the setup menu.
- To exit Setup:

  Select [Save] in the Setup menu. The parameter settings are saved.

  Select [Cancel] in the Setup menu to close the Setup menu.

  If you change the system language and tap [Save] in the Setup menu, the system automatically shuts down to make the modification effective.

Tip: configuration parameters may not be all fit on one screen view, swipe downwards to see more options.

12.1 System Preset

The system automatically enters the [System] screen after you enter Setup.

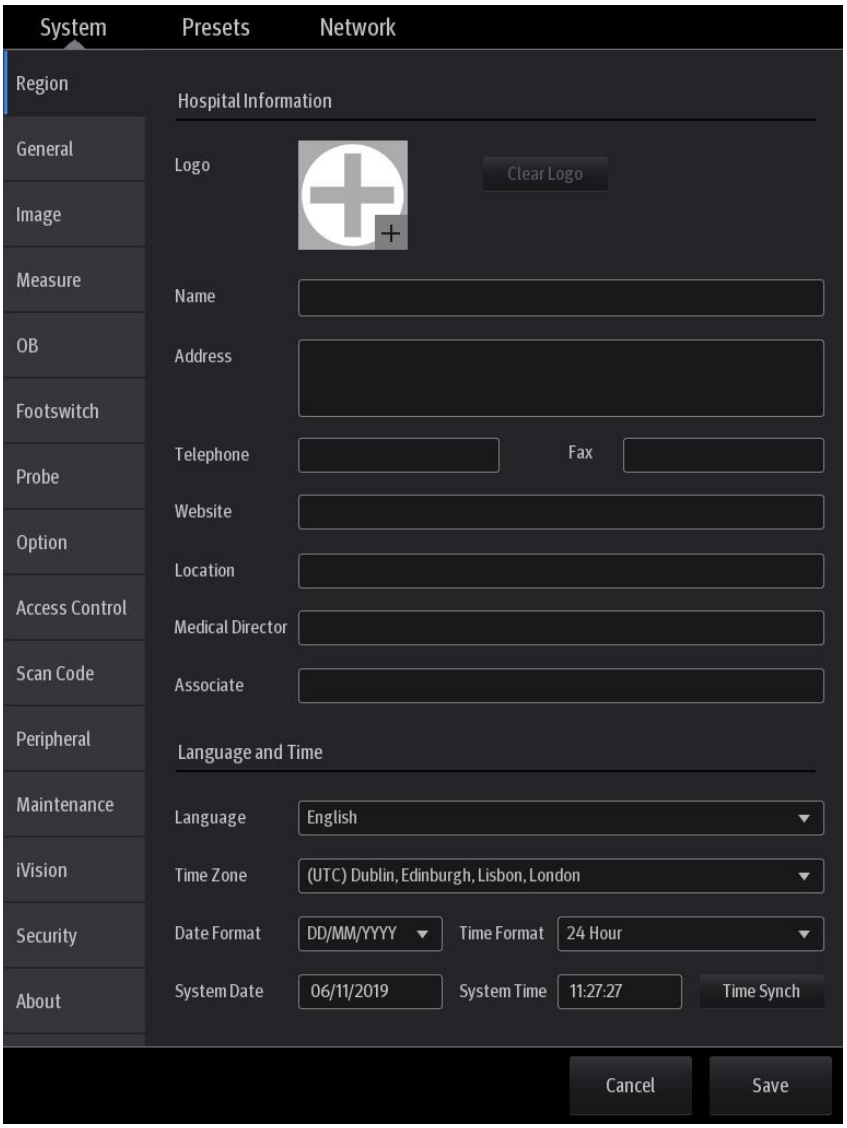

The following gives a brief introduction of each page, see the following chapters for details.

Page	Description
Region	To set the hospital name, language, time zone, time format and system date/time.
General	To set animal information, exam, animal management, storage related parameters, system dormancy, annotation and body mark and so on.
Image	To set general parameters in imaging modes.
Measure	To set the measurement ruler, measurement setting, follicle method and so on.
Footswitch	To assign functions to the footswitch.
Probe	To assign functions to the probe.
Option	To check installed options and you can also install/trial options that are not installed yet. You can trial each option for 3 months at most. Each option can only be trialed once. If you have any questions, please contact the service engineer or your agent.
Access Control	To set the user account control relevant information.
Scan Code	To set the code parameters for barcode reader.
Peripheral	To set printer and display parameters.
Maintenance	To import or export user data, restore factory setting and export log.
iVision	To set iVision related parameters and perform demonstration.
Security	To make settings for data encryption, transmission encryption and anti-virus software.
About	You can check system versions and information here.

12.1.1 Region

Controls are as follows:

Item	Description
Hospital Information	To set the hospital-relevant information such as name, address, telephone, and so on.
Language	To select a language display for the system.
Load Logo	Import image for logo loading. **NOTE:** For a better display effect, please try to use an image with 400*400 pixels.
Time Zone	To select the time zone.
Time Format	To select the time format.
Date Format	To set the date format.
System Date	To set the date for the system.
System Time	To set the time for the system.
Time Sync	To assign a time server and make the time of the ultrasound machine consistent with the server.

12.1.2 General

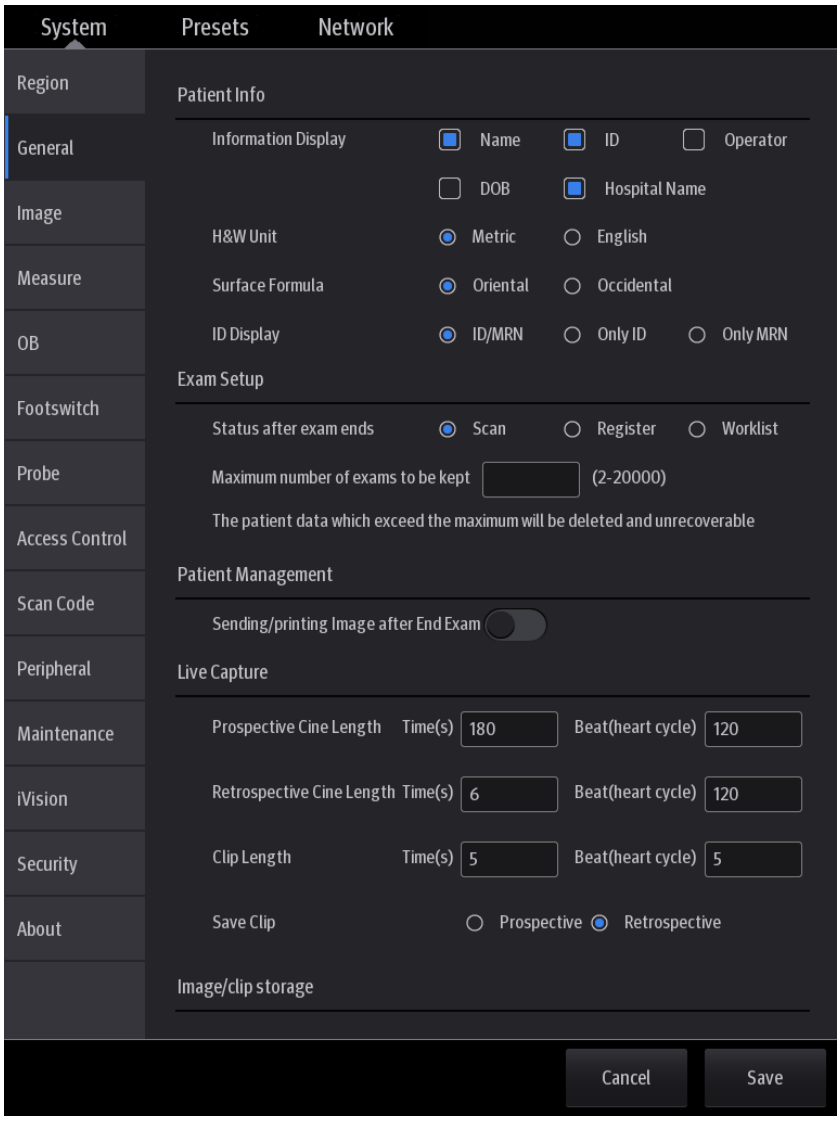

Controls are as follows: (swipe downwards to check all settings)

Type	Item	Description
Patient Info	Info displays in an image banner	To select whether to display the available animal information items on the top of the screen.
	H&W Unit	To set the unit for calculating animal height and weight.
	Surface Formula	To set the surface formula.
	ID Display	To set whether to display ID or MRN on the top of the screen.
Exam Setup	Status after exam ends	To set the system status when an exam ends.
	Maximum number of exams to be kept	To set the maximum number of exams to be kept in iStation. NOTE: The animal exams which exceed the preset maximum will be deleted and unrecoverable, it is recommended to perform animal data backup before enabling this function to avoid data loss.

Type	Item	Description
Patient Management	Sending/printing after End Exam	Select whether to automatically archive the exam data to the DICOM server for storage/print.
Live Capture	Prospective Cine Length	To set the cine length for prospective live capture.
	Retrospective Cine Length	To set the cine length for retrospective live capture.
	Clip Length	To set the cine length and heart cycle.
	Save Clip	To set the mode for [Save Clip] button on the operating panel: Prospective or Retrospective.
Image/clip Storage	While Storing Image to Hard Disk	To set if an image is sent to local default printer/DICOM Storage/DICOM Printer/iStorage/USB flash drive when the image is saved.
	While Storing Image to Hard Disk	To set if cine is sent to DICOM Storage/iStorage/USB flash drive when the cine is saved.
Storage	Image Size	To set the image size when saving an image or print an image: Image Area or Stand Area.
	Save Image Beep	To set the key volume for saving single/multi-frame image.
Screen Saver	Screen Saver	To select a system dormancy type. After the screen saver function is enabled, tap [Browse] to select the figure used for the screen saver and tap [Preview] to see the effect. NOTE: Only BMP format images with no more than 768*1024 pixels and 1-bit/8-bit/24-bit/32-bit depth are supported. To set the delay before the system enters dormancy/standby/iZoom status in the drop-down list beside “Wait.”
	Interval	To set the interval time for the screen saver slideshow.
Comments and Body Markers	Bodymark/Comments Clear	To set if body marker is cleared when the system is unfrozen. To set if body markers/comments are cleared during unfreeze or changing probe/exam.
AVI Encode	Export file format Setting	To set cine format in the [Send To] dialogue box.
	Encode Quality	To set the quality of the cine.
iVocal Component	Automatically shut down waiting time(min)	To set the delay before voice recording stops automatically.
	Enable Voice Response	After it is ticked, the system will repeat recorded voice commands automatically.
Voice Annotation	Voice comment enabled	After it is ticked, the voice annotation function will be enabled.
Keyboard Sound	Keyboard sound enabled	After it is ticked, the keyboard sound will be enabled.

12.1.3 Image Preset

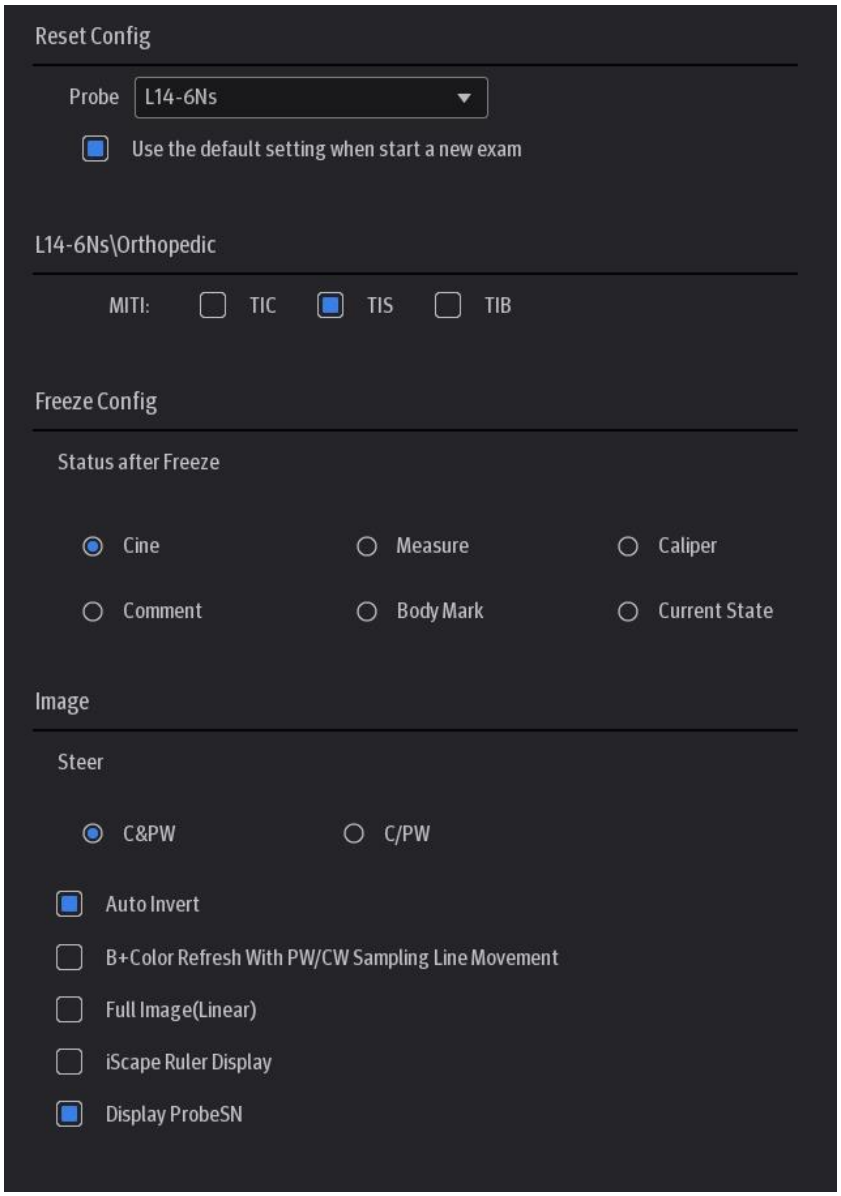

Controls are as follows:

Type	Item	Description
Reset Config.	Probe	To set the default probe model for the system.
	Use the default setting when start a new exam	After it is ticked, when the exam of a new animal is started, image parameters will be preset parameters.
Probe/Exam mode	MITI	To set MI TI indexes displayed for current probe/exam mode.
Freeze Config	Status after Freeze	To set the system status after the image is frozen.
Image	Steer	To set the steer mode in B + Color + PW imaging mode. C&PW: select to adjust the sample volume in color mode and sample line in PW mode together. C/PW: select to adjust the sample volume in color mode and sample line in PW mode separately.
	Auto Invert	The spectrum can automatically invert when the color flow is steered to a certain angle, thus accommodating the operator's wish to distinguish the flow direction.
	B+Color Refresh with PW/CW Sampling Line Movement	To set whether to turn on the function that when moving PW/CW sampling line, B image is activated under B+Color+PW/CW mode.
	Full Image(Linear)	After it is ticked, if a linear probe is used and the depth value is low, the image will be displayed completely.
	iScape Ruler Display	To set if the caliper is displayed on the iScape view image.
	Display Probe SN	To set if the probe SN is displayed next to the probe model.

12.1.4 Measure

See the Operator's Manual [Advanced Volume] for details.

12.1.5 Footswitch

You can assign a function to the left/middle/right key of the foot switch here.

12.1.6 Probe

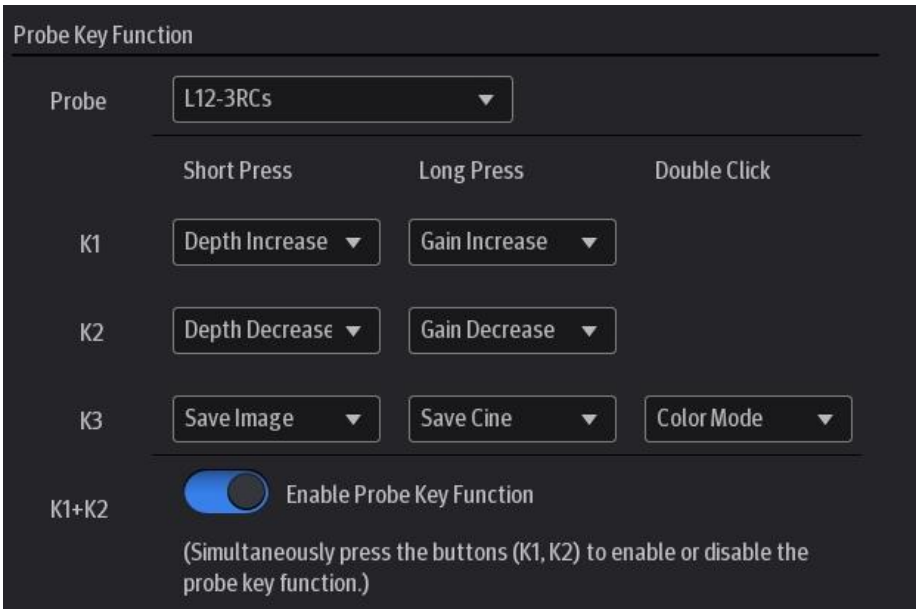

Controls are as follows:

Type	Item	Description
Probe Key Function	Probe	To select the probe model to be set.
	K1	To set the function of K1 button.
	K2	To set the function of K2 button.
	K3	To set the function of K3 button.
	Enable Probe Key Function	After it is ticked, the key function of probe is enabled.

12.1.7 Access Control

See chapter “10.10 Administration” for details.

12.1.8 Scan Code Preset

See chapter “C.4 Setting in Ultrasound System” for details.

12.1.9 Peripheral Preset

This screen is used to set up the printer and image printing.

■ Printer setting

The printer settings include print service and printer driver.

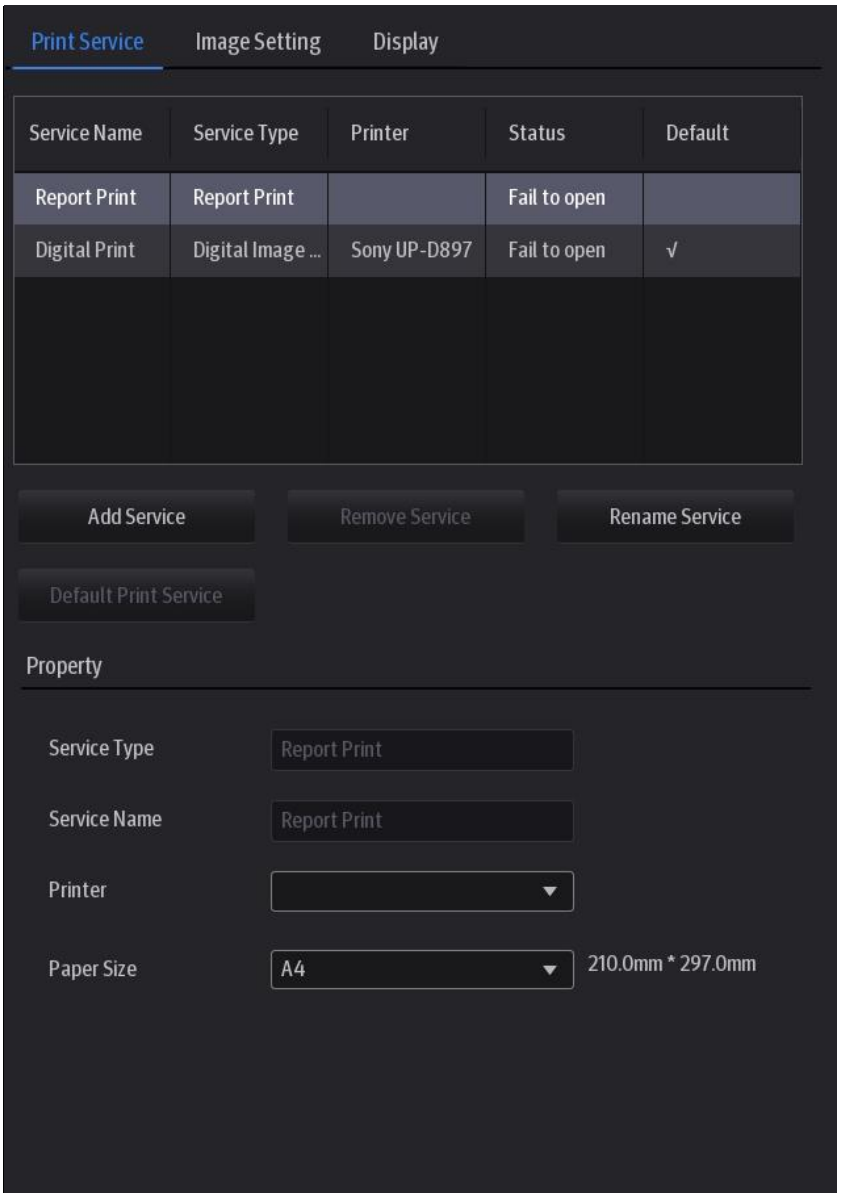

- Print Service Setting
  - ➤ Add Service: tap to begin adding print services.
  - ➤ Remove Service: tap to delete the selected print service.
  - ➤ Rename Service: tap to rename the selected print service.
  - ➤ Default print service: tap to set the selected print service as the default one.
  - ➤ Property: set print service properties for the selected print service from the list above.

  For details about adding printers, see “3.7 Installing a Graph/Text Printer.”

■ Image Settings

Tap [Image Setting] to enter the page, you can set the brightness, contrast and saturation of image printing, or you can use the default values.

■ Display

Tap [Display] to enter the page, you can set output resolution and range for the connected external display.

12.1.10 Maintenance

The [Maintenance] function is designed for you to import or export user data, restore factory setting and export log. You may also execute self-test and option installation/trial through the maintenance menu. If you require other maintenance functions, please contact Mindray Animal Medical Customer Service Department or sales representative.

■ Exporting Setup Data

This function is used to write all setup data of the system into a disk for backup. The format of the data file is .PDP.

You can select two types of preset data to export from the system:

- General module preset data: including “All Preset”, “Image Preset” and “DICOM/HL7” data.
- Exam mode related preset data, including all image setting, comment and body mark setting and measurement setting data.

Procedures:

1. Select the target module.
2. Tap [Export] to open the [Export Data] screen.
3. Select the path to save the data.
4. Select the exported file and type as PDP and tap [OK].

■ Importing Setup Data

This function is used to import the existing setup data to the setup data memory of the system. The system will reset and operate according to the setup preferences that were imported.

Procedures:

1. Tap [Import] to open the Load Data screen.
2. Select the imported file.
3. Tap [OK], a progress bar will appear and the setup data is imported to the specified path.
4. To restore the factory setup data, tap [Load Factory] on the right side of the screen.

You can use [Load Factory] at the bottom of the screen to restore all factory setup data of the system.

■ Probe Check

This function is used to check the condition of transducer elements to evaluate the probe performance.

Before performing the probe check, ensure the probe head must be clean and the probe is in non-scanning state.

Tap [Probe Check] to enter the Probe Check screen:

- If a transducer element is in malfunction, it is displayed as a red spot.
- If a transducer element functions well, it is displayed as a green spot.

You can export the result image to the external device.

■ Other Settings

Type	Item	Description
Load Factory		Local factory default settings.

Type	Item	Description
Setup	Show Metrics Logs	Show the metrics logs, such as login count, total usage time, user metrics details, exam mode metrics details or probes.
	Extract Preset Data	/
	Export Log	Export the log.
	Self-Test	Perform system self-test and restart the machine.
	Enter Windows	For password, please contact your service engineer.
	Recover	To recover the system.
	Needles List Replace	Update the list of needles that support eSpacial Navi function. NOTE: The list of needles must be release version provided by Mindray Animal Medical.
	Needles List Recover	Restore the list of needles that support eSpacial Navi function to the last version.
	Needles List Factory	Restore the list of needles that support eSpacial Navi function to the factory version.

If you have any questions, please contact the service engineer or your sales representative.

12.1.11 iVision

See chapter “10.2.6 iVision” for details.

12.1.12 Security

Tap [Security] on the Setup menu to enter the security-setting screen.

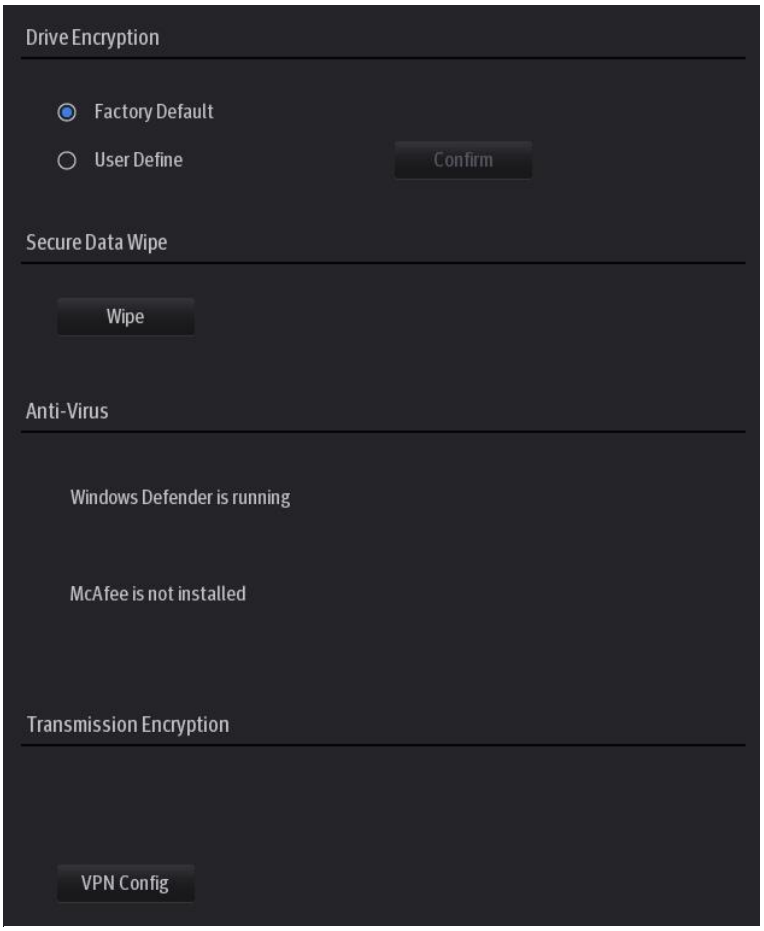

1. Drive Encryption/Secure Data Wipe

Encrypt the animal data stored in the hard disk. The system provides two encryption methods: Factory Default and User Define.

- Factory Default: the system is in factory state by default.
- User Define: add a user-defined password.

1) Select [User Define]. If the animal data are already stored in the hard disk, the system prompts the following message: (if no animal data are stored in the hard disk, perform steps 5 to 6 directly)

2) Tap [OK] to return to the Security screen, tap [Wipe], and the system prompts the following message:

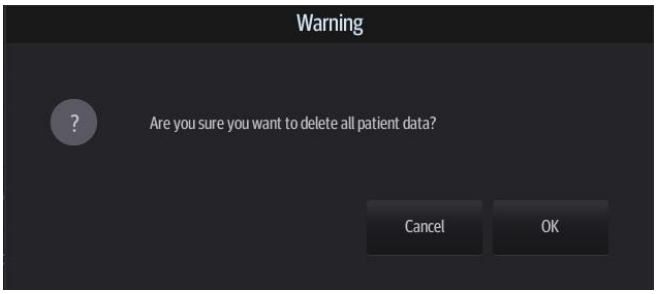

3) Tap[OK], and the system prompts the following message:

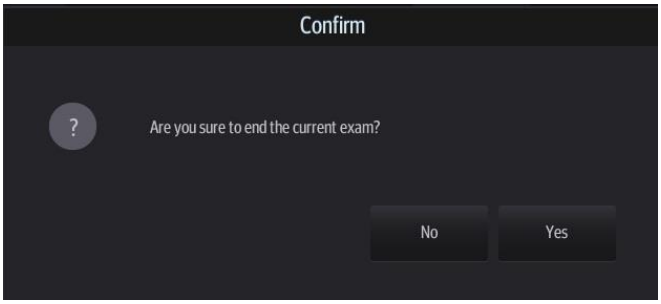

4) Tap [Yes] to wipe the animal data.
5) Select [User Define] and tap [Confirm].
6) Input the password and tap [Confirm] to finish the password setting.

Notes
1. If you want switch to Factory Default, you should enter user defined password and perform steps 1 to 6 again. The password is the same as that of the User Define.
2. When you set password, multi-language and Chinese characters are not supported.

2. Anti-Virus

The system provides two anti-virus software: Windows Defender and McAfee. They can effectively prevent the ultrasound system from being attacked by virus, spyware, or other malware.

If the McAfee software is installed, the system displays “McAfee is installed”; if not, the system displays “McAfee is not installed”. The McAfee software is an option. If you want to buy McAfee, contact Mindray Animal Medical service engineers.

Notes:
1. McAfee cannot be uninstalled after successful installation.
2. McAfee can also be installed after installation of Windows Defender.
3. If McAfee is improperly installed due to power-off, shut-down, closing of cmd.exe, or any other abnormal operation during the installation, please contact the Mindray Animal Medical service engineers.

3. Transmission Encryption

After accessing the network, tap [VPN Config] to enter the "VPN Config" interface.

Item	Description
Status	No driver: tap [Setup Driver] to enter the "TAP-Windows 9.21.2 Setup" interface, and do as instructed. Ready: the VPN is ready for use. Advance: VPN Advance Configuration Connected: VPN is successfully connected. Disconnected: VPN is disconnected. Error: error connection.
Server IP	/
Group	
User Name	
Password	
Hide characters	The password is displayed as *.
Connect/ Disconnect	Connect or disconnect VPN.
Advance	Enters the "VPN Advance Config" interface. Reset: if the system does not respond after you tap [Config], tap [Reset]. Config: enters the "Open Connect-GUI VPN client" interface. For details about the settings, please refer to the TAP manual. Note: after exiting the "VPN Advance Config" interface, you need to reboot the system; otherwise, you cannot connect VPN normally.
Close	Close the "VPN Config" interface.

12.1.13 System Information

This screen displays the system software version, versions of other devices and serial numbers of probes. You cannot edit the information, only view them. The information varies depending on the system configurations and version.

12.2 Exam Related Preset

Select [Setup] -> [Presets] to enter the screen. You can assign exam modes for each probe or set measurement, body mark and annotation settings for current exam mode.

12.2.1 Exam Mode Preset

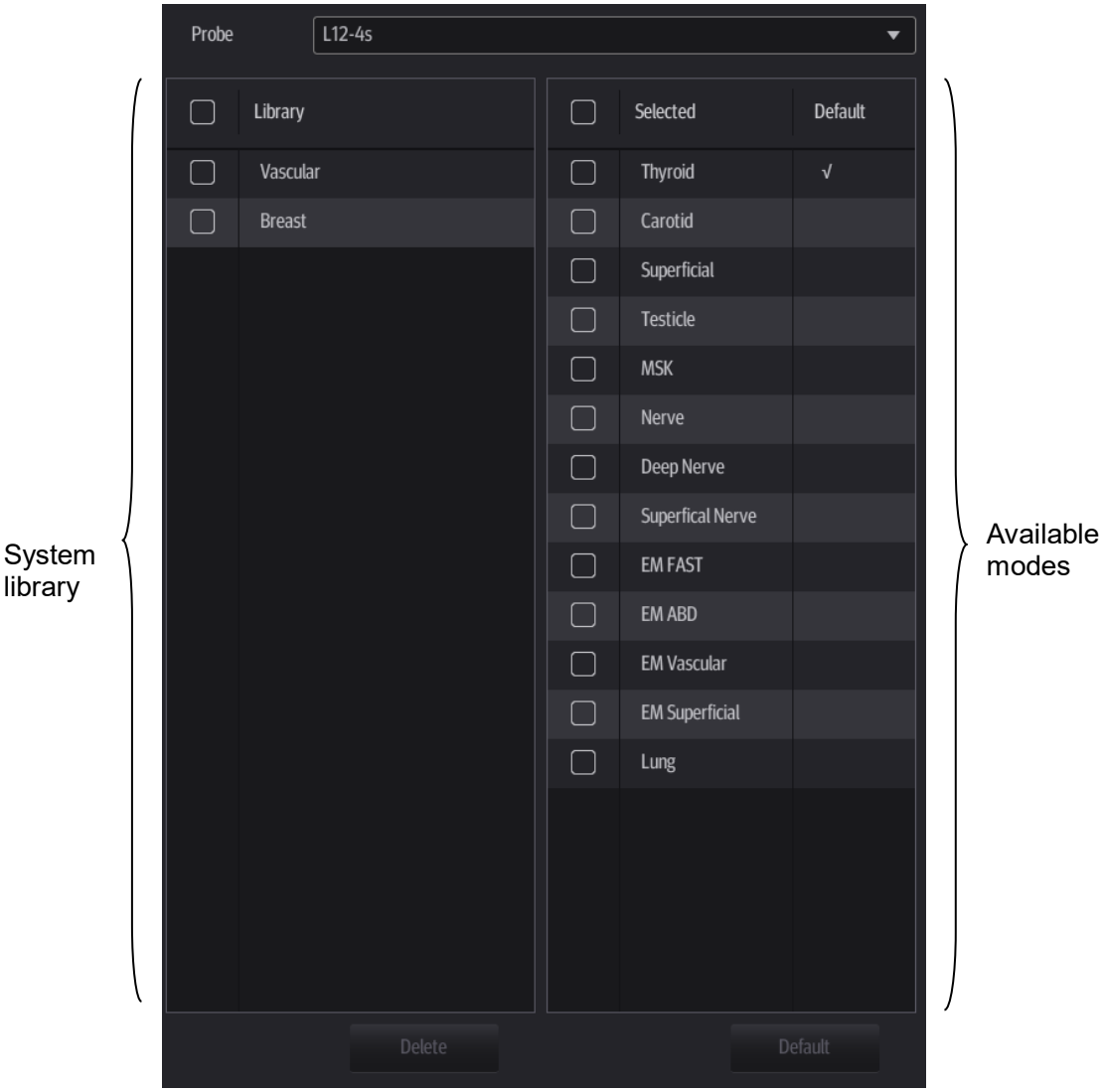

You can assign available exam modes for probes.

1. Select the probe model in the drop-down list beside Probe column.
2. Check current configured exam modes:

   On the left side, you can view all the available exam modes in the exam library for the probe.

   On the right side, you can view the current exam modes assigned to the probe.(Tapping [Probe] on the left side of the operating panel to see the list.)
3. Tap and hold any exam mode until it floats, then you can:

- Drag the exam mode from “Library” column to “Selected” column to make the exam mode available for the probe.
- Drag the exam mode from “Selected” column to “Library” column to make the exam mode unavailable for the probe.

4. Change default exam mode or delete user-defined exam mode if necessary:
   - Tap [Delete] to delete a user-defined exam in the Exam Mode Library area. See “5.1.3 Quickly Saving Image Settings” for details about creating a user-defined exam mode.
   - Tap [Default] to set a selected exam mode as the default exam mode. The default exam mode is marked by a “√”.
5. Tap [Save] to save the settings or tap [Cancel] to cancel changes you made.

12.2.2 Measurement Preset

See the Operator’s Manual [Advanced Volume] for details.

12.2.3 Comment Preset

You can change the annotation menu for current exam mode. The comments in the library are provided by the system or are user-defined ones.

In Body Mark preset page, you can change the body mark menu for current exam mode. Body Mark preset is similar to Comment preset, here Comment preset is introduced as an example.

1. Select [Setup] -> [Presets] -> [Comment Preset] to enter the screen.

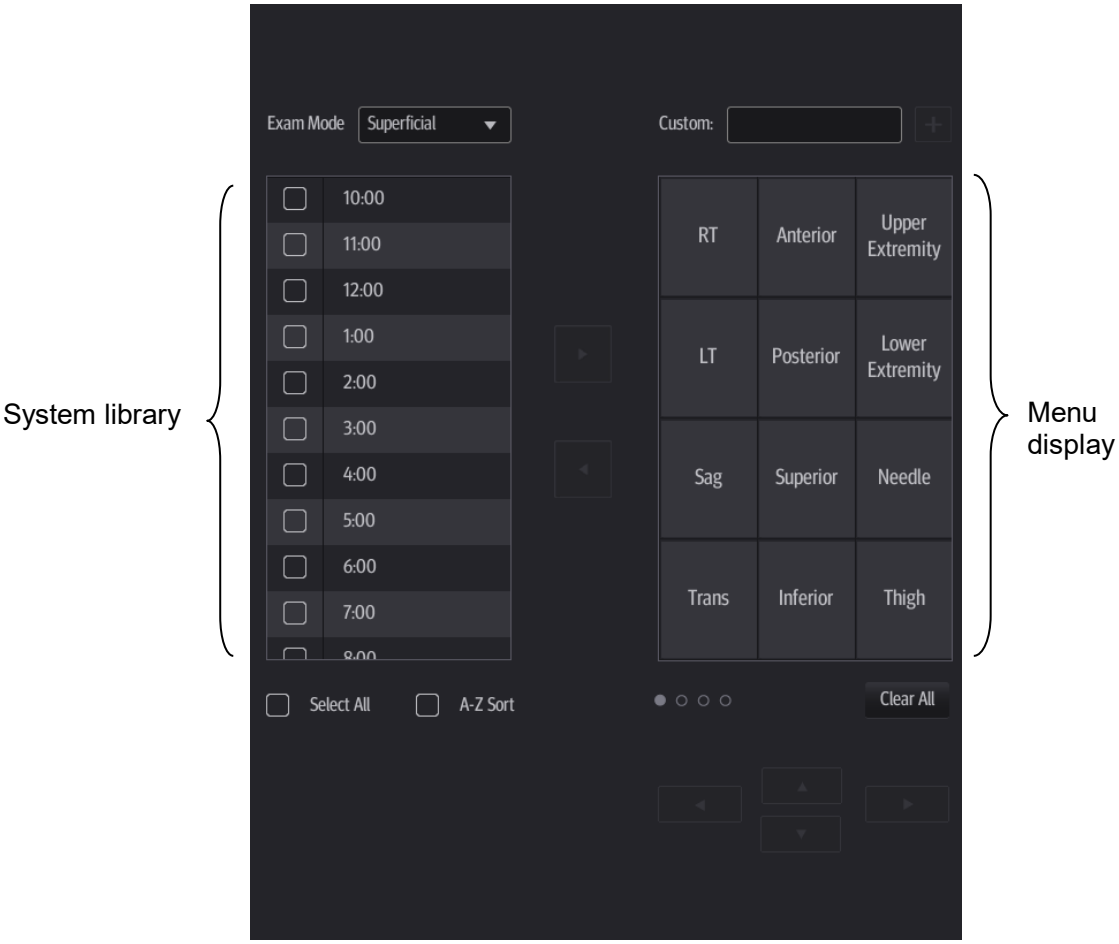

2. Add comments: directly enter user-defined comment texts, or select comment texts for the annotation menu for current exam mode.

- Directly enter user-defined comment texts: tap in the field box besides “Custom”, enter the text comment through the soft keyboard, and then tap . Then the directly-entered comment will be added to the menu. Swipe downwards to see more comments.
- Select available items:
  a) First select a comment library in the drop-down list beside “Exam Mode”, all available items will be displayed on the left.
  b) Tap to add the item from system library on the left into annotation menu on the right.

3. Change position of the selected items:
   - Tap an item on the right side box to make it highlighted in blue, and tap the desired position to move the item to the position;
   - Or you can use directional buttons below to make the change.

4. Withdraw a comment or delete a user-defined comment:
   - Withdraw an item in the annotation menu:

     Select an item in annotation menu on the right, and tap to withdraw it.
   - Delete a user-defined item in the annotation menu:

     Select a user-defined item in the annotation menu on the right, and tap .

     You can only delete the user-defined items rather than the items in the system library. After a user-defined item is deleted, it will not be available.
5. After you customize comments, tap [Save] to confirm and exit the screen.

12.2.4 iWorks Preset

See “17.2Appendix G iWorks (Auto Workflow Protocol)” for details.

12.3 Network Related Preset

Select [Setup] -> [Network] to enter the screen. You can configure network related settings here, including DICOM setting, eGateway setting, network setting and Q-Path setting.

For details of local IP setting, see “11.1.1 IP Preset”.

12.3.1 DICOM Local and DICOM/HLP Preset

See “11.1 DICOM Preset” for details.

12.3.2 eGateway Preset

Before using eGateway, the system should be in the same network segment with the eGateway server, and ensure that the eGateway software version is **7.1** or later versions.

For details of eGateway installation and configuration, see eGateway manual.

12.3.2.1 eGateway Query Preset

■ The preset screen is as follows:

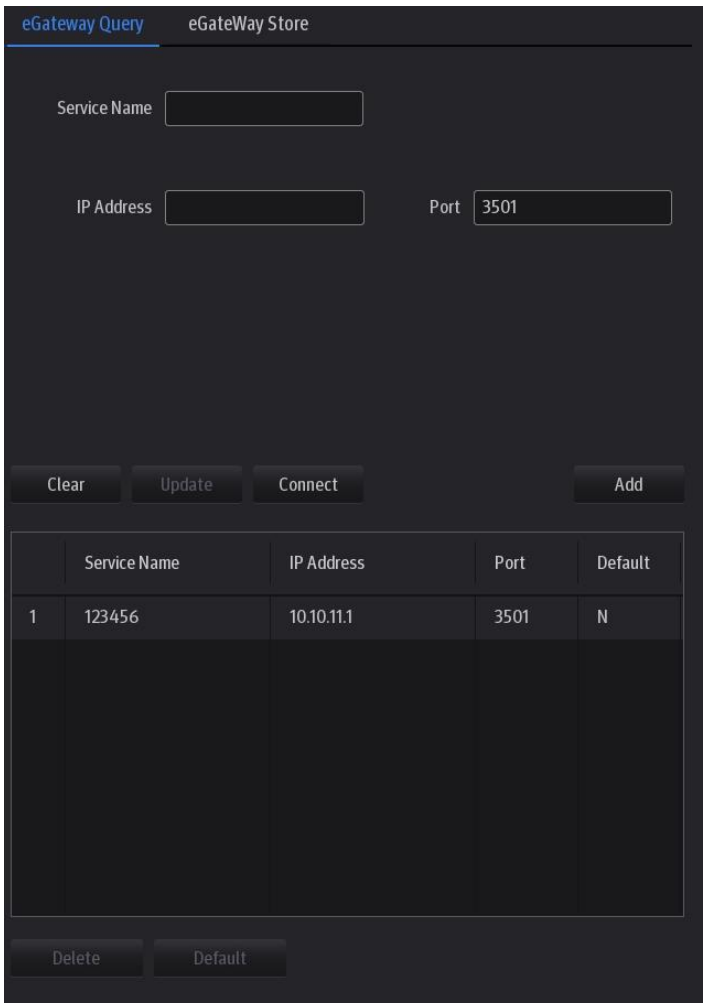

Name	Description
Service Name	The name of the eGateway service.
IP Address	IP address of the eGateway service.
Port	Port for transmitting.
Connect	Tap to verify connection.
Clear	Clear the information that is being typed in. (service not added yet)
Add	Tap to add the Network service to the service list.
Update	To save the changed parameters.
Delete	Tap to delete the selected service from the service list.
Default	To set the server as the default one.

■ Add an eGateway service

1. Set the eGateway server properties as described above.
2. Tap [Add] to add the service to the service list.

■ Modify a network service

1. Select the service to be updated in the service list.

2. Modify the parameters in the upper part of the screen and tap [Update] to update the setting.

12.3.2.2 eGateway Store Preset

■ The preset screen is as follows:

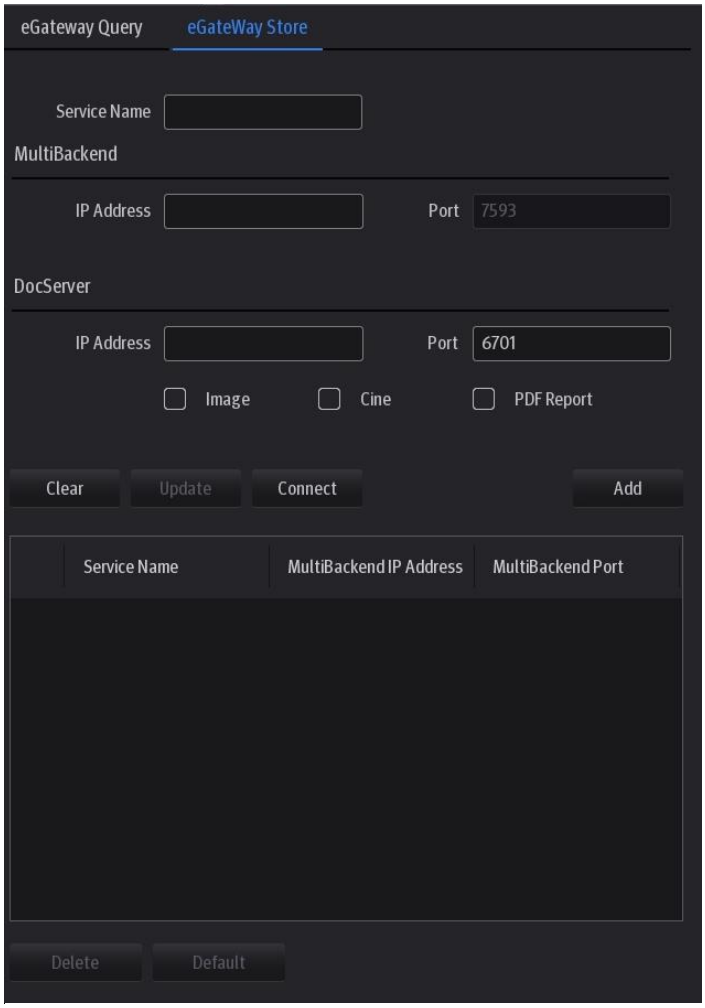

Name	Description
Service Name	The name of the eGateway service.
IP Address	IP address of the eGateway service.
Port	Port for transmitting.
Connect	Tap to verify connection.
Clear	Clear the information that is being typed in. (service not added yet)
Add	Tap to add the Network service to the service list.
Update	To save the changed parameters.
Delete	Tap to delete the selected service from the service list.
Default	To set the server as the default one.

■ Add an eGateway service

1. Set the eGateway server properties as described above.
2. Tap [Add] to add the service to the service list.

■ Modify a network service

1. Select the service to be updated in the service list.
2. Modify the parameters in the upper part of the screen and tap [Update] to update the setting.

12.3.3 Network Preset

12.3.3.1 iStorage Preset

■ The iStorage screen is as follows:

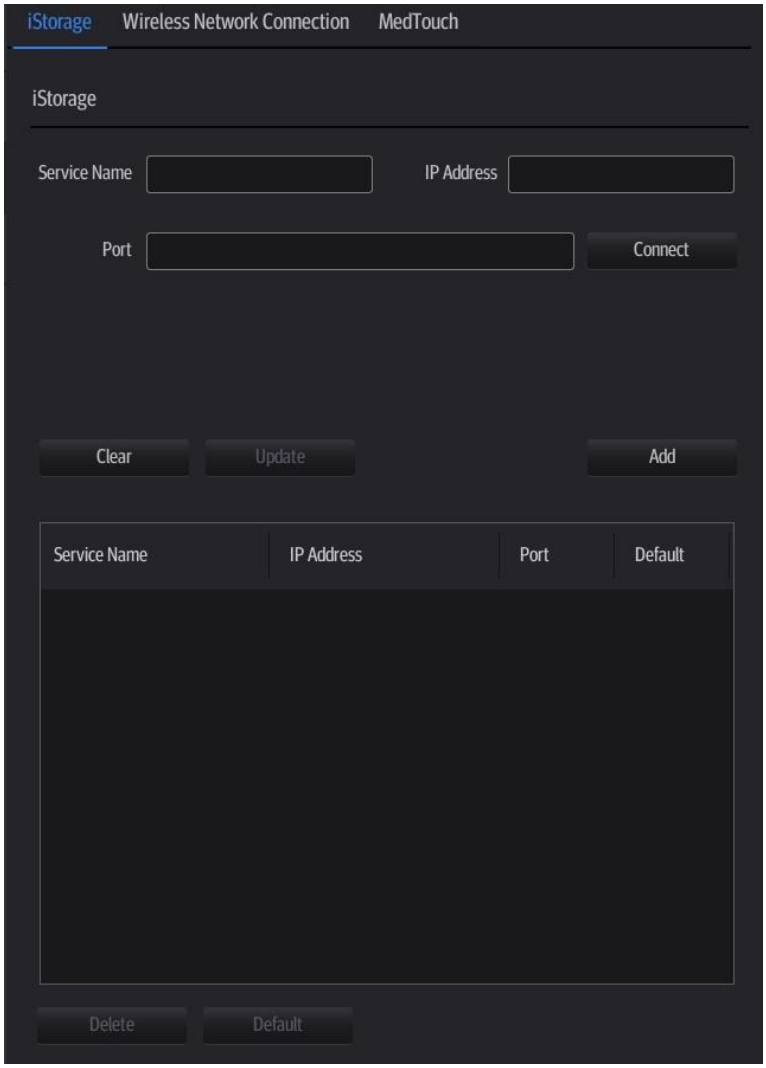

Name	Description
Service Name	The name of the iStorage service.
IP Address	IP address of the iStorage service device.
Port	Port for transmitting.
Connect	Tap to verify connection.
Clear	Clear the information that is being typed in. (service not added yet)
Add	Tap to add the Network service to the service list.
Update	To save the changed parameters.

Name	Description
Delete	Tap to delete the selected service from the service list.
Default	To set the server as the default one.

■ Add an iStorage service

1. Set the iStorage server properties as described above.
2. Tap [Add] to add the service to the service list.

■ Modify a network service

1. Select the service to be updated in the service list.
2. Modify the parameters in the upper part of the screen and tap [Update] to update the setting.

12.3.3.2 Wireless Network Connection

Reserved.

12.3.3.3 MedTouch Preset

You can set environment for MedTouch here and then use the MedTouch function by mobile phone or tablet computers. See MedTouch manual for details.

12.3.4 Q-Path

See chapter “10.12 Q-Path” for details.

13 Probes and Biopsy

13.1 Probes

The system supports the following probes:

L14-5sp		L12-4s	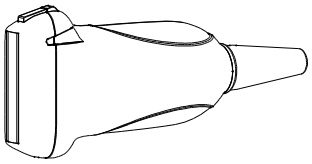
L14-6Ns	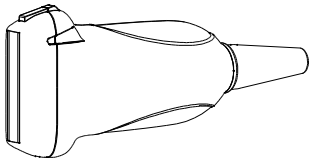	P4-2s	
L14-6s	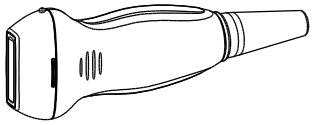	C11-3s	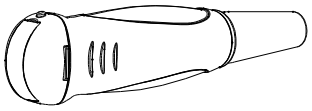
P7-3Ts	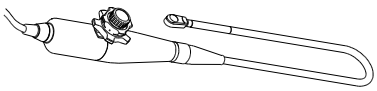	P10-4s	
L20-5s	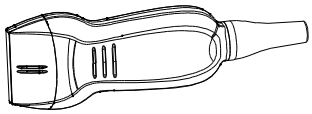	P7-3s	
L16-4Hs	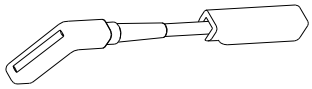	SP5-1s	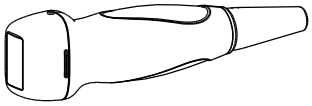
L12-3RCs	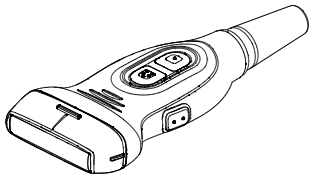	C5-1s	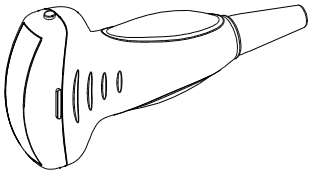
C4-1s	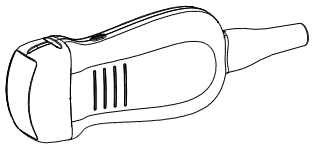	/	/

For details about probe P7-3Ts, see the relevant Ultrasonic Transducer Operator’s Manual.

13.1.1 Probe Functions by Part

The basic structures and corresponding functions of probes are basically the same.

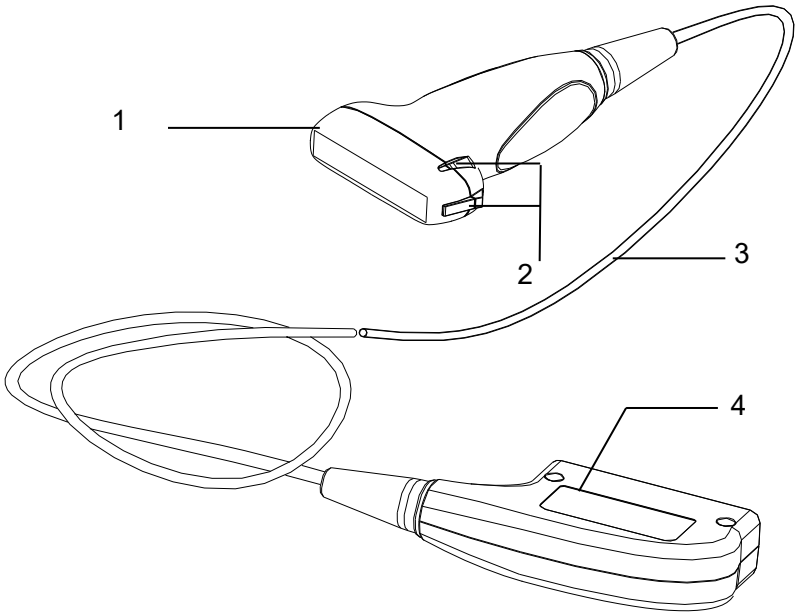

No.	Name	Function
1	Probe head	Converts the electrical signal to an ultrasonic signal, focusing the sound beams in a given direction while it receives the reflected ultrasonic signal and converts it to an electrical signal for transmission over the cable. The lens on the surface is the acoustic lens. Apply ultrasound gel to the acoustic lens for correct operation.
2	Needle-guided bracket fixing tabs and grooves	Provides mounting support for the needle-guided bracket.
3	Probe cable	Transmits electrical signals between the probe body and connector.
4	Probe connector	Connects the probe and cable to the ultrasound diagnostic system.

Tip:

The probes' structure, marked 2 in the figure above, may vary depending on the corresponding needle-guided brackets.

13.1.2 Orientation of the Ultrasound Image and the Probe Head

The orientation of the ultrasound image and the probe are shown below. The “Mark” side of the ultrasound image on the display corresponds to the mark side of the probe. Check the orientation prior to the examination (using a linear probe as an example).

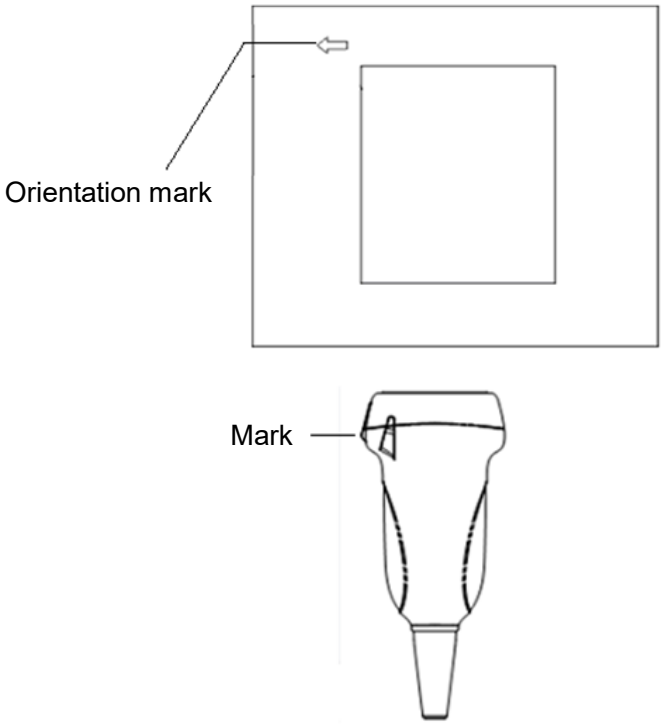

13.1.3 Operating Procedures

This section describes the general procedures for operating the probe. The proper clinical technique to use for operating the probe should be selected on the basis of specialized training and clinical experience.

Operating procedures (with biopsy function):

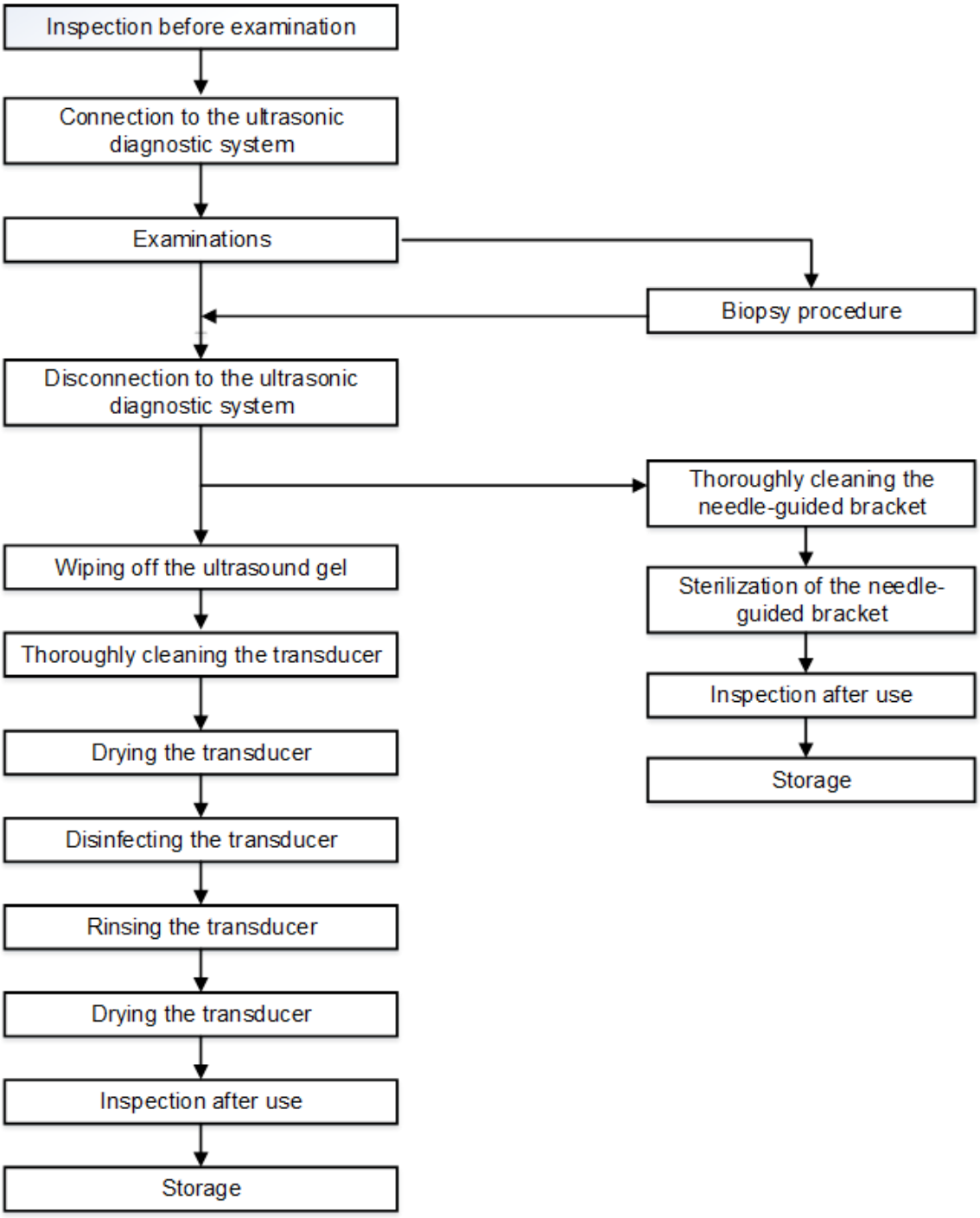
Inspection before examination
Connection to the ultrasonic diagnostic system
Examinations
Biopsy procedure
Disconnection to the ultrasonic diagnostic system
Thoroughly cleaning the needle-guided bracket
Sterilization of the needle-guided bracket
Inspection after use
Storage
Wiping off the ultrasound gel
Thoroughly cleaning the transducer
Drying the transducer
Disinfecting the transducer
Rinsing the transducer
Drying the transducer
Inspection after use
Storage

Operating procedures (with no biopsy function):

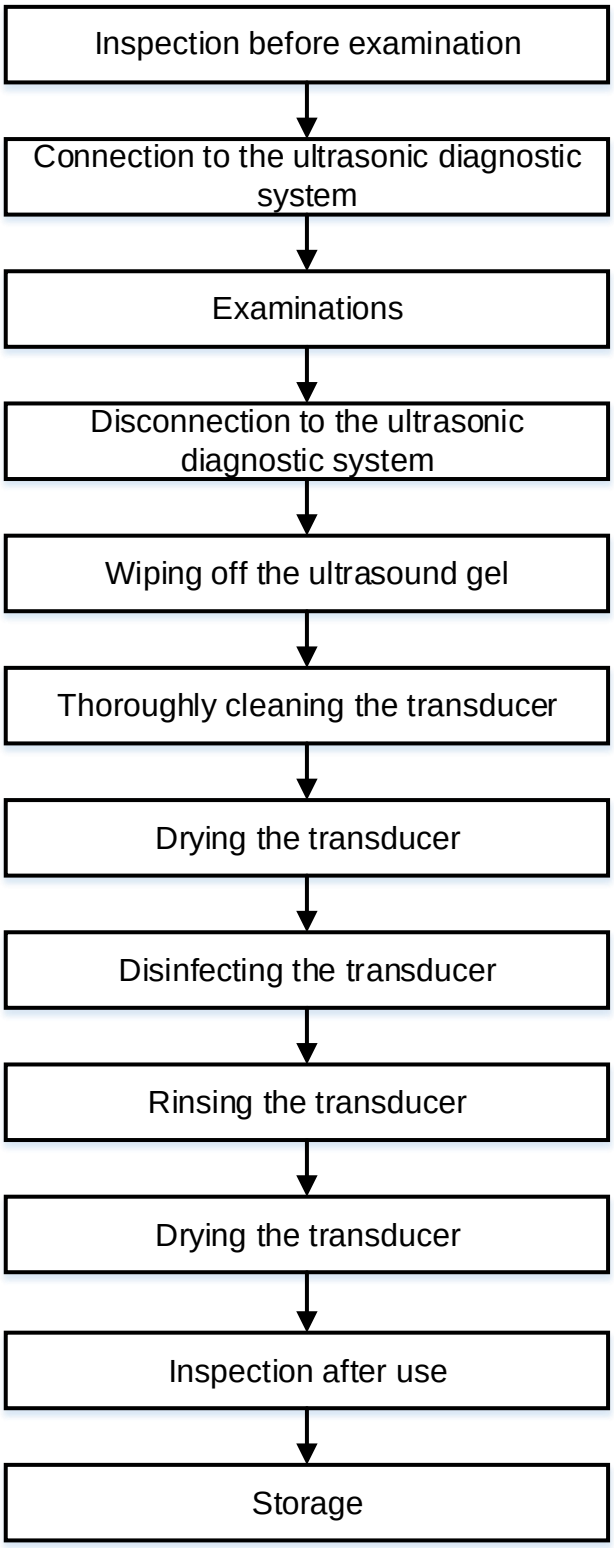

⚠**WARNING:**	**Disinfect the probe and sterilize the needle-guided bracket before and after an ultrasound-guided biopsy procedure is performed. Failure to do so may cause the probe and the needle-guided bracket to become sources of infection.**

13.1.4 Wearing the Probe Sheath

A legally-marketed probe sheath must be installed over the probe before performing intra-cavitary and intra-operative examinations. Protective barriers may be required to minimize disease transmission. Probe sheaths are available for use in all clinical situations where infection is a concern.

To order probe sheaths, contact:

CIVCO Medical Instruments Co.

102 First Street South, Kalona, IA 52247-9589 USA Tel: 1-319-656-4447

E-mail: info@civco.com

http://www.civco.com

⚠ **CAUTION:**	**Be sure to cover the probe with a new (unused) probe sheath to prevent infection during examination. If the probe sheath packaging is open or broken, the probe sheath may not be sufficiently sterilized. DO NOT use the probe sheath in such circumstances.** **The cover contains natural rubber latex and talc that can cause allergic reactions in some individuals.** **DO NOT use an expired probe sheath. Before using, verify that the probe sheath is within the expiration date.**

Method (for reference only):

1. Place an appropriate amount of gel inside the sheath or on the probe acoustic lens. Poor imaging may result if no gel is used.

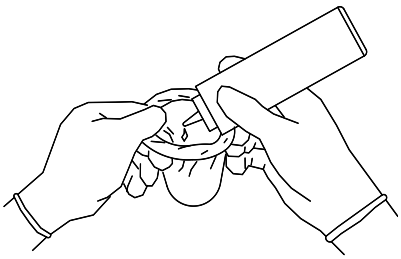

2. Insert the probe into the sheath. Be sure to use a proper sterile technique. Pull the cover tightly over the probe acoustic lens to remove wrinkles and air bubbles, taking care to avoid puncturing the sheath.

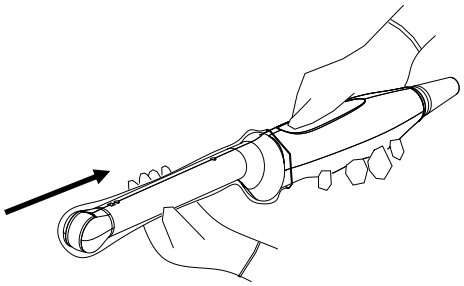

3. Secure the sheath with the enclosed elastic bands.

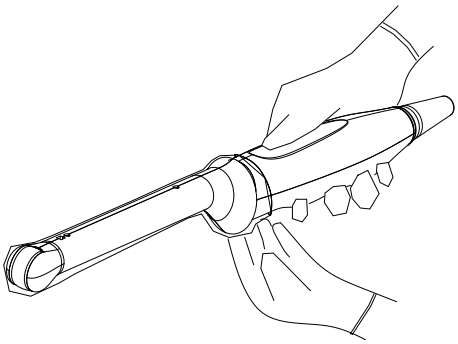

4. Inspect the sheath to ensure there are no holes or tears.

13.1.5 Probe Cleaning, Disinfection and Sterilization

Before and after completing each examination, clean and disinfect (or sterilize) the probes as required. When biopsy procedures have been performed, be sure to sterilize the needle-guided bracket. Failure to do so may result in the probe and the needle-guided bracket becoming sources of infection. Please follow the instructions in the manual for cleaning.

⚠ **WARNING:**	**Never immerse the probe connector into liquid such as water or disinfectant. Immersion may cause electrical shock or malfunction.**

⚠ **CAUTION:**	**After disinfection, rinse the probe thoroughly with sterile water to remove all chemical residues. Chemical residues on the probe may be harmful to the human body.** **No cleaning and disinfecting may result in the probe becoming a source of infection.** **Please follow the disinfectant manufacturer's manual for performing cleaning and disinfection, including preparing sterile water and cleaning and disinfection time.**

NOTE:	After the examination, wipe off the ultrasound gel thoroughly. Otherwise, the ultrasound gel may solidify and degrade the image quality of the transducer. DO NOT make the probe overheated (more than 55°C) during cleaning and disinfections. High temperature may cause the probe to become deformed or damaged. Observe the graph here carefully to immerse the probe. Only soak parts of the probe below the strain relief. Repeated disinfection will eventually damage the probe, please check the probe performance periodically.

Cleaning and Disinfection/Sterilization Overview

Cleaning and disinfection refer to two distinct processes. According to the Centers for Disease Control and Prevention (CDC) "Guideline for Disinfection and Sterilization in Healthcare Facilities" (2008):

- Cleaning is the removal of visible soil (e.g. organic and inorganic material) from objects and surfaces and normally is accomplished manually or mechanically using water with detergents or enzymatic products. Thorough cleaning is essential before high-level disinfection and sterilization because inorganic and organic material that remains on the surfaces of instruments interfere with the effectiveness of these processes.
- Disinfection describes a process that eliminates many or all pathogenic microorganisms, except bacterial spores.
  - Low-Level Disinfection—Destruction of most bacteria, some viruses, and some fungi. Low-level disinfection will not necessarily inactivate Mycobacterium tuberculosis or bacterial spores.
  - High-Level Disinfection (HLD)—Destruction/removal of all microorganisms except bacterial spores.
- Sterilization describes a process that destroys or eliminates all forms of microbial life and is carried out in healthcare facilities by physical or chemical methods.

Selecting a Microbicidal Method

Probes can be divided into three categories based on their intended use. Some probes may fall into more than one category (e.g. probes use for biopsy procedures). When selecting a disinfectant, determine the required level of disinfection based on intended use and possibility of cross-contamination.

- Contacts intact skin: Probes that only come into contact with clean, intact skin are considered noncritical devices and require cleaning after every use. Cleaning may be followed by a low-level disinfectant spray or wipe.
- Contacts mucous membranesand non-intact skin: This category includes all endocavity probes - intravaginal, transrectal, and transesophageal (TEE) and probes use for biopsy procedures. These semi-critical probes must be cleaned with an appropriate cleaner after use followed by high-level disinfection.
- Contacts otherwise sterile tissue or body-space: These probes are considered critical and include all intraoperative probes. These probes must be cleaned with an appropriate cleaner after each use, followed by a sterilization process.

Cleaning

Please refer to the instructions in the manual and follow your hospital policy and procedures for cleaning.

Perform the following procedure:

1. Wear a pair of gloves to prevent infection.
2. Disconnect the probe from the system. If the sheath is used, take off the sheath and discard it.
3. Wipe off the ultrasound gel or other visible dirt on the surface of the probe by using a damp piece of disposable lint-free soft cloth or tissue.
4. Choose an appropriate cleaning agent including cleaning wipes and sprays, mild detergents, enzymatic cleaners and specially designed enzymatic sponges.
5. Immerse the probe fully in the cleaning fluid for at least 1 minute or according to manufacturer's instructions. Lightly mechanical clean the probe with a piece of lint-free soft cloth or soft sponge until no dirt is visible. When necessary, clean the seams or biopsy guide features by using disposable cotton swabs. Avoid using a brush to wash the lens because it may damage the probe.
6. Rinse the probe thoroughly by using a large amount of distilled or softened water (about 7.5 L/2 gallons) at room temperature for about 30 s to remove the residual dirt and cleaning solvent. Repeat the rinsing operation twice.
7. Dry the probe by wiping with a piece of disposable lint-free soft cloth or tissue.

   Do not dry the probe by heating.
8. Inspect the probe. If visible dirt still exists, repeat the preceding steps to wash the probe until it is all clean.
9. Check whether the probe has defects such as peeling, rifts, bumps, cracks, or liquid spill. If such defects exist, the probe has reached the end of its service life. In this case, stop using it and contact the Mindray Animal Medical service department.

Low-level disinfection of a non-critical probe

⚠**CAUTION:**	**Use protective eyewear when disinfecting using sprays.**

Perform the following procedure:

1. Wear a pair of gloves to prevent infection.
2. Clean the probe thoroughly in accordance with the cleaning procedure before disinfection.
3. Disinfect the probe by using an appropriate low-level disinfectant. Follow the disinfection agent manufacturer's instructions for preparation and use of the disinfectant.
   - Wipes: Wipe all the surface of the probe according to the wiping duration specified in the operator's manual provided by the manufacturer.
   - Spray: Spray the disinfectant directly on the surface of the probe or spray the disinfectant on a piece of disposable lint-free soft cloth and wipe the probe according to the wiping duration in the operator's manual provided by the manufacturer.

     Observe the graph here carefully to perform disinfection. Do not spray the strain relief on the connector end or the connector.

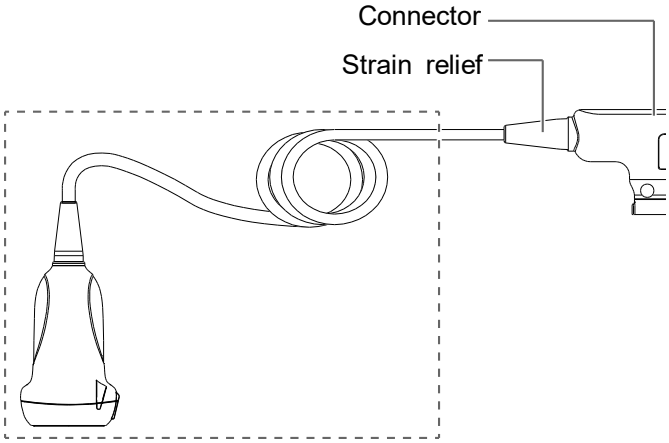

4. Wipe away the residual disinfectant on the probe by using a piece of lint-free soft cloth soaked with distilled water. Wipe three times. Or rinse the probe thoroughly by using a large amount of distilled or softened water (about 2 gallons) at room temperature.
5. Dry the probe by wiping with a piece of disposable lint-free soft cloth.

   Do not dry the probe by heating.
6. Check whether the probe has defects such as peeling, rifts, bumps, cracks, or liquid spill. If such defects exist, the probe has reached the end of its service life. In this case, stop using it and contact the Mindray Animal Medical service department.
7. Store the probe in a cool, clean and dry environment. And repeat the cleaning and disinfection process before the next use.

High-level disinfection of a semi-critical probe

Perform the following procedure:

1. Wear a pair of gloves to prevent infection.
2. Clean the probe thoroughly in accordance with the cleaning procedure before disinfection.
3. Disinfect the probe by using an appropriate high-level disinfectant or system.

   For how to use a high-level disinfectant or system, see the operator's manual provided by the manufacturer. Prepare a disinfectant by using sterile distilled or softened water when necessary.
4. Immerse the probe head in the disinfectant and shake the probe appropriately to remove any bubbles on the probe surface.

Observe the graph here carefully to immerse the probe. Only soak parts of the probe below the strain relief.

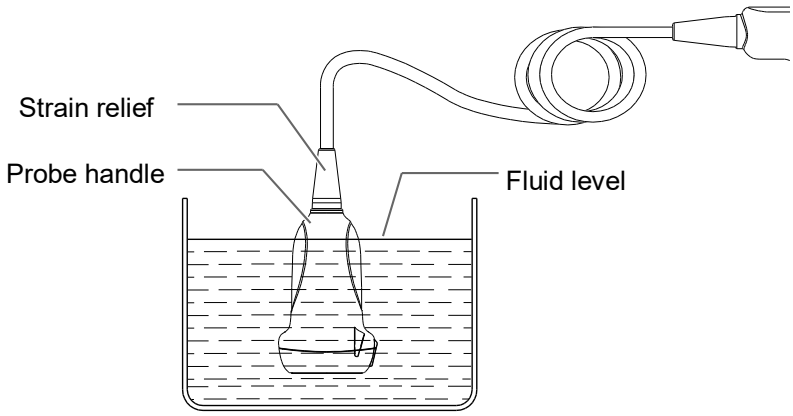

For details about the probe immersion duration, see the operator's manual provided by the manufacturer.

5. Rinse the probe thoroughly by using a large amount of sterile distilled or softened water (about 2 gallons) at room temperature for about 30 s to remove the residual disinfectant. Repeat the operation twice. Or follow the disinfectant manufacturer's instructions regarding rinsing.
6. Dry the probe by wiping with a piece of sterile disposable lint-free soft cloth.

   Do not dry the probe by heating.
7. Check whether the probe has defects such as peeling, rifts, bumps, cracks, or liquid spill. If such defects exist, the probe has reached the end of its service life. In this case, stop using it and contact the Mindray Animal Medical service department.
8. Store the probe in a cool, clean and dry environment. And repeat the cleaning and disinfection process before the next use.

Sterilization of a critical probe

⚠**CAUTION:**	**Repeated sterilization will eventually damage the probe, please check the probe's performance periodically.**

For intra-operative probes, they have to be thoroughly cleaned and sterilized after completing each examination.

Perform the following procedure:

1. Wear a pair of gloves to prevent infection.
2. Clean the probe thoroughly in accordance with the cleaning procedure before sterilization.
3. Sterilize the probe by using an appropriate sterilant or system.

   For how to use a system, see the operator's manual provided by the manufacturer.

   When using a sterilant, follow the following steps:

   a. Prepare a sterilant by using sterile distilled or softened water when necessary.
   b. Immerse the probe head in the sterilant and shake the probe appropriately to remove any bubbles on the probe surface.

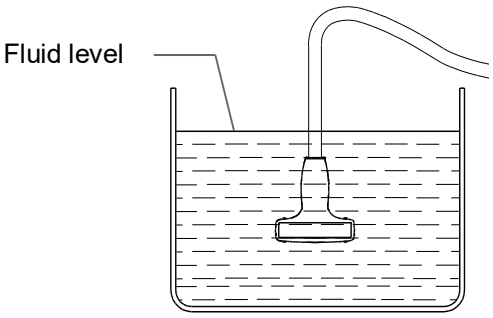

Immerse the intra-operative probe in the solution (for reference)

For details about the probe immersion duration, see the operator's manual provided by the manufacturer.

c. Rinse the probe thoroughly by using a large amount of sterile distilled or softened water (about 2 gallons) at room temperature for about 30 s to remove the residual disinfectant. Repeat the operation twice. Or follow the sterilant manufacturer's instructions regarding rinsing.

d. Dry the probe by wiping with a piece of sterile disposable lint-free soft cloth. Do not dry the probe by heating.

4. Check whether the probe has defects such as peeling, rifts, bumps, cracks, or liquid spill. If such defects exist, the probe has reached the end of its service life. In this case, stop using it and contact the Mindray Animal Medical service department.

5. Store the probe in a cool, clean and dry environment. And repeat the cleaning and disinfection process before the next use.

Compatible Cleaners and Disinfectants

For the cleaners and disinfectants information, see *Mindray Transducer Disinfectant Recommendation*.

13.1.6 Probe Environmental Conditions

Probe Model	Operating conditions			Storage and transportation conditions		
	Ambient temperature	Relative humidity	Atmospheric pressure	Ambient temperature	Relative humidity	Atmospheric pressure
C11-3s	0℃~40℃	30%~85% RH (no condensation)	700hPa ~ 1060hPa	-20℃~55℃	30%~95% RH (no condensation)	700 hPa ~ 1060 hPa
L12-4s	0℃~40℃	30%~85% RH (no condensation)	700hPa ~ 1060hPa	-20℃~55℃	30%~95% RH (no condensation)	700 hPa ~ 1060 hPa

Probe Model	Operating conditions			Storage and transportation conditions		
	Ambient temperature	Relative humidity	Atmospheric pressure	Ambient temperature	Relative humidity	Atmospheric pressure
L14-6s	0℃~40℃	30%~85% RH (no condensation)	700hPa ~ 1060hPa	-20℃~55℃	30%~95% RH (no condensation)	700 hPa ~ 1060 hPa
L14-6Ns	0℃~40℃	30%~85% RH (no condensation)	700hPa ~ 1060hPa	-20℃~55℃	30%~95% RH (no condensation)	700 hPa ~ 1060 hPa
P4-2s	0℃~40℃	30%~85% RH (no condensation)	700hPa ~ 1060hPa	-20℃~55℃	30%~95% RH (no condensation)	700 hPa ~ 1060 hPa
L16-4Hs	10℃~40℃	30%~85% RH (no condensation)	700hPa ~ 1060hPa	0℃~60℃	30%~95% RH (no condensation)	700 hPa ~ 1060 hPa
P10-4s	0℃~40℃	30%~85% RH (no condensation)	700hPa ~ 1060hPa	-20℃~55℃	30%~95% RH (no condensation)	700 hPa ~ 1060 hPa
L20-5s	0℃~35℃	15%~80% RH (no condensation)	700 hPa ~ 1060 hPa	-20℃~60℃	15%~90% RH (no condensation)	500 hPa ~ 1060 hPa
P7-3s	10℃~40℃	30%~85% RH (no condensation)	700hPa ~ 1060hPa	-20℃~55℃	30%~95% RH (no condensation)	700 hPa ~ 1060 hPa
SP5-1s	0℃~40℃	20%~85% RH (no condensation)	700hPa ~ 1060hPa	-20℃~55℃	20%~95% RH (no condensation)	700 hPa ~ 1060 hPa
C5-1s	0℃~40℃	30%~85% RH (no condensation)	700hPa ~ 1060hPa	-20℃~55℃	30%~95% RH (no condensation)	700 hPa ~ 1060 hPa
C4-1s	0℃~35℃	15%~90% RH (no condensation)	700 hPa ~ 1060 hPa	-20℃~60℃	15%~90% RH (no condensation)	700 hPa ~ 1060 hPa
L12-3RCs	0℃~40℃	20%~85% RH (no condensation)	700 hPa ~ 1060 hPa	-20℃~55℃	20%~95% RH (no condensation)	700 hPa ~ 1060 hPa

Probe Model	Operating conditions			Storage and transportation conditions		
	Ambient temperature	Relative humidity	Atmospheric pressure	Ambient temperature	Relative humidity	Atmospheric pressure
L14-5sp	10°C～40°C	30%～85%RH (no condensation)	700hPa～1060hPa	0°C～60°C	30%~95% RH (no condensation)	700 hPa ~ 1060 hPa

13.1.7 Storage and Transportation

When all examinations for the session have been completed, confirm that the probe is in good condition. After disinfecting the probe, confirm that the probe is still in good condition and stored in a suitable place.

1. To prevent the probe from being damaged, DO NOT store it where it may be exposed to:
   - Direct sunlight or X-rays
   - Sudden changes in temperature
   - Dust
   - Excessive vibration
   - Heat generators
2. When the probe is sent to the MINDRAY ANIMAL MEDICAL Customer Service Department or a sales representative for repair, be sure to disinfect it and keep it in the carrying case to prevent infection.
3. Sterilize the carrying case as necessary.

13.2 Biopsy Guide

⚠WARNING: **The person performing biopsy procedures must understand diagnostic ultrasound thoroughly and have been adequately trained, otherwise the animal may suffer consequences.**

In the situations listed below, the biopsy needle may fail to penetrate the target. Incorrect biopsy may cause various consequences for the animal.

- **Using a needle-guided bracket other than that provided.**
- **Mounting the needle-guided bracket incorrectly.**
- **Using a biopsy needle that is unsuitable for the type of biopsy being performed.**
- **Using a biopsy needle that is unsuitable for the needle guide.**

Before and after a biopsy procedure is performed, confirm that the needle-guided bracket is normal. Manually confirm that the parts of the needle-guided bracket do not slip or move from their proper positions. If the needle-guided bracket is used when parts are not securely and correctly installed, the animal may be injured. If an abnormality is found on the needle-guided bracket, immediately stop using it and contact the MINDRAY ANIMAL MEDICAL Customer Service Department or a sales representative.

DO NOT use a needle-guided bracket while scanning is performed. The needle may advance in an incorrect direction and possibly injure the animal.

Never perform a biopsy during image scanning.

Needle guided brackets are required to verified before each biopsy. If the verification fails, it indicates that the needle-guided brackets are out of service life.

DO NOT freeze an image while performing a biopsy procedure.

During biopsy procedures, the needle may deviate from the desired course due to tissue characteristics or the type of needle. In particular, needles with small diameters may deviate to a greater degree.

Disinfect the probe and sterilize the needle-guided bracket before and after each ultrasound-guided biopsy procedure is performed. Failure to do so may cause the probe and the needle-guided bracket to become sources of infection.

The needle mark displayed on the ultrasound image does not indicate the actual position of the biopsy needle. Therefore, it should only be used as a reference. Always monitor the relative positions of the biopsy needle during procedures.

Adjust the needle mark before the biopsy procedure is performed.

When performing biopsy procedures, only use sterile ultrasound gel that is certified as safe and manage the ultrasound gel properly to ensure that it does not become a source of infection.

When performing an operation involving biopsy, wear sterile gloves.

Image of the biopsy target and the actual position of the biopsy needle:

> **Diagnostic ultrasound systems produce tomographic plane images with information about particular thicknesses in the thickness direction of the probe. (That is to say, the information shown in the images consists of all the information scanned in the thickness direction of the probe.) Therefore, even though the biopsy needle appears to have penetrated the target object in the image, it may not actually have done so. When the biopsy target is small, dispersion of the ultrasound beam may lead to the image deviating from the actual position. Be aware of this.**

The target object and biopsy needle appear in the image as shown in the figures below (for reference only):

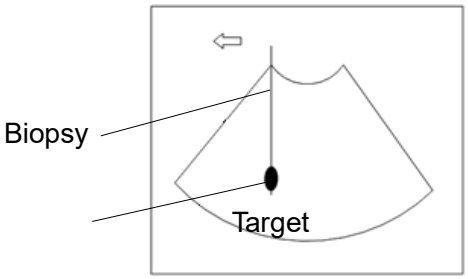

The biopsy needle appears to reach the target object in the image

Dispersion of the ultrasound beam

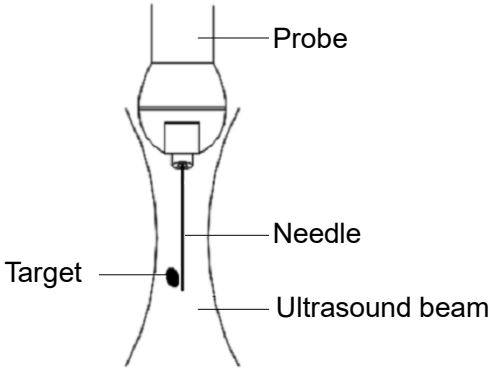

The biopsy needle may not have actually entered the target object even though it appears to have done so in the image. To avoid this, note the points below:

- **Do not rely only on the needle tip in the image. Pay careful attention to the fact that when the biopsy needle enters the target object or comes into contact with it, the object should shift slightly.**

Before performing the biopsy, evaluate the size of the object and confirm whether the biopsy can be carried out.

13.2.1 Needle-Guided Brackets

Needle-guided brackets are available for purchase as optional accessories and are used in combination with the probe. Some probes have corresponding needle-guided brackets and needles. To order needle-guided brackets, contact the MINDRAY ANIMAL MEDICAL Customer Service Department or a sales representative.

For biopsy or treatment, ultrasound-guided biopsy procedures can be performed using the probe together with a needle-guided bracket (optional accessory) and a biopsy needle (provided by the user).

Names of Parts

This section describes the parts and corresponding functions of each needle-guided bracket. Here, we take a corresponding probe as an example.

- NGB-007

  Metal/needle detachable needle-guided bracket:

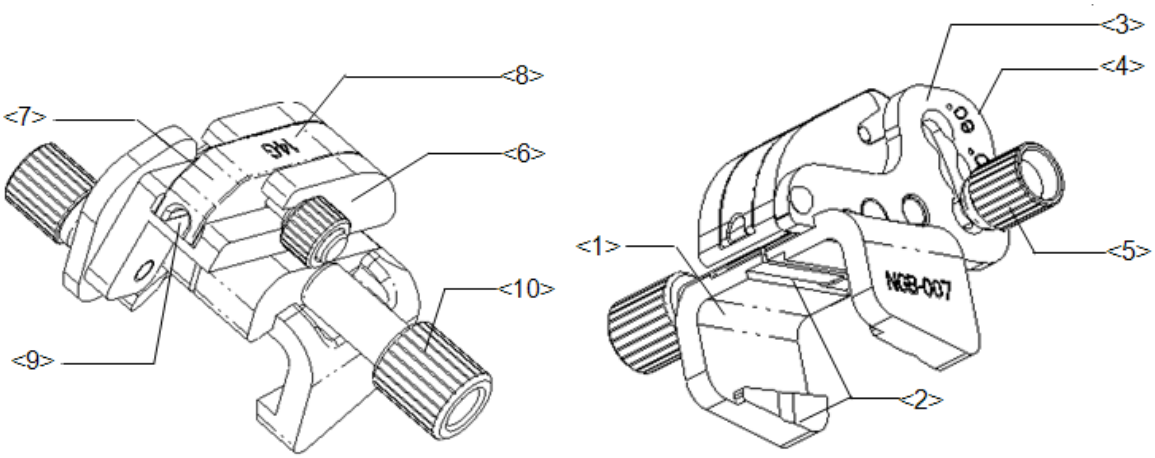

No.	Name	Description
<1>	Support for needle-guided bracket	Used for installing the needle-guided bracket on the probe.
<2>	Tab and groove for the needle-guided bracket	Corresponding to the tab and groove of the probe.
<3>	Angle-adjusting base	There are 3 types of angles available for adjustment.
<4>	Angle shift sign (40°, 50°, 60°)	Corresponding to the biopsy angle (40°, 50° and 60°).
<5>	Angle pinch nut	Used for fixing the angle lock at a chosen angle.
<6>	Angle block	Used for determining the angle of the biopsy. Different specifications of blocks can be used.
<7>	Guiding block	Used for installing biopsy needles. There are five guiding block specification for different biopsy needles.
<8>	Guiding block specification (14G)	Matched with the corresponding biopsy needle (14G).
<9>	Needle guide hole	Used for installing the biopsy needle.
<10>	Needle-guided bracket pinch nut	Used for locking the needle-guided bracket and the probe.

Plastic/needle detachable needle-guided bracket:

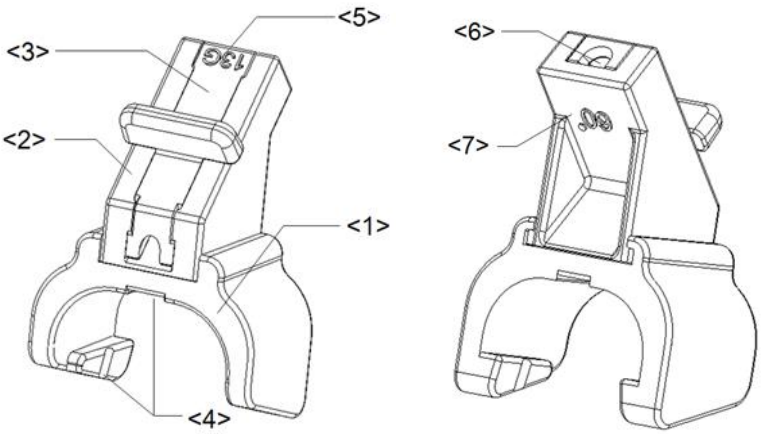

No.	Name	Description
<1>	Support for needle-guided bracket	Used for installing the needle-guided bracket on the probe.
<2>	Angle block	Used for determining the angle of the biopsy. There are three angle block specifications.
<3>	Guiding block	Used for installing biopsy needles. There are five guiding block specification for different biopsy needles.
<4>	Tab and groove for the needle-guided bracket	Corresponding to the tab and groove of the probe.
<5>	Guiding block specification (13G)	Matched with the corresponding biopsy needle (13G).
<6>	Biopsy needle guiding hole	Used for installing the biopsy needle.
<7>	Angle block specification (60°)	The corresponding biopsy angle is 60°.

■ NGB-011

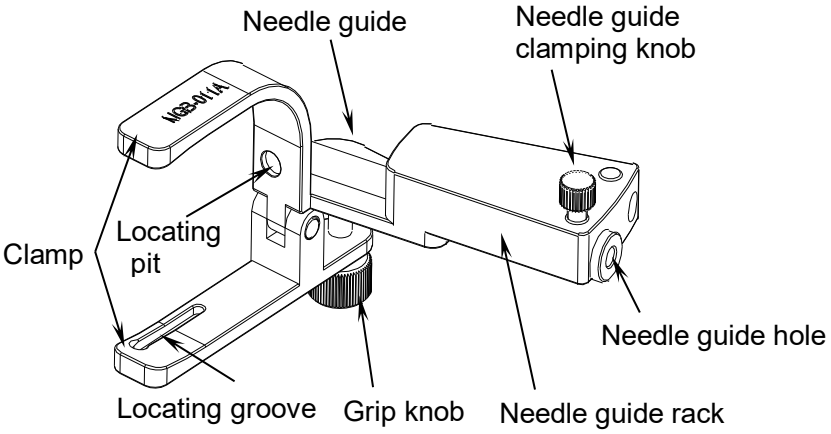
Needle guide
Needle guide clamping knob
NGB-011A
Clamp
Locating pit
Needle guide hole
Locating groove
Grip knob
Needle guide rack

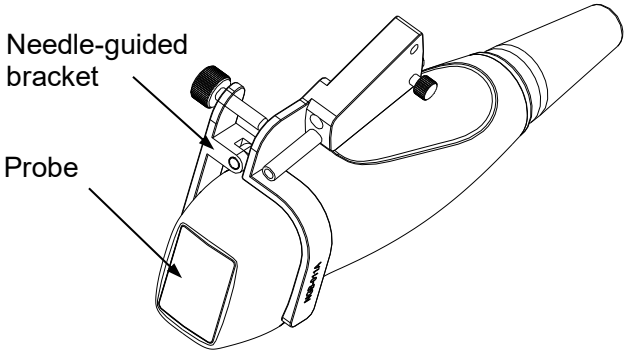
Needle-guided bracket
Probe

■ NGB-016

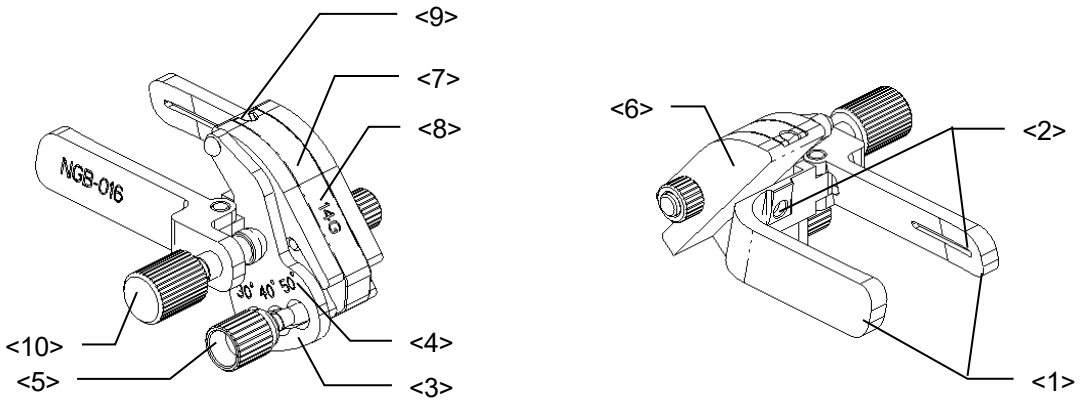

No.	Name	Description
<1>	Clamp of needle-guided bracket	Used for installing the needle-guided bracket on the transducer.
<2>	Groove of the needle-guided bracket	Matches with the tab of the transducer.
<3>	Angle adjusting base	There are 3 types of angles available to be adjusted.
<4>	Angle shift sign (30°, 40°, 50°)	Matches with the biopsy angle (30°, 40°, 50°).
<5>	Angle pinch nut	Used for fixing the angle lock at a chosen angle.
<6>	Angle block	Determines the angle of the biopsy; different specifications of blocks can be used.
<7>	Guiding block	Used for installing the needles of different specifications, 5 types of needles are available.
<8>	Specification of guiding block (14G)	Matched with the corresponding biopsy needle (14G).
<9>	Guiding hole of biopsy needle	Used for installing the needles.
<10>	Pinch nut of needle-guided bracket	Used for locking the needle-guided bracket and the transducer.

■ NGB-018

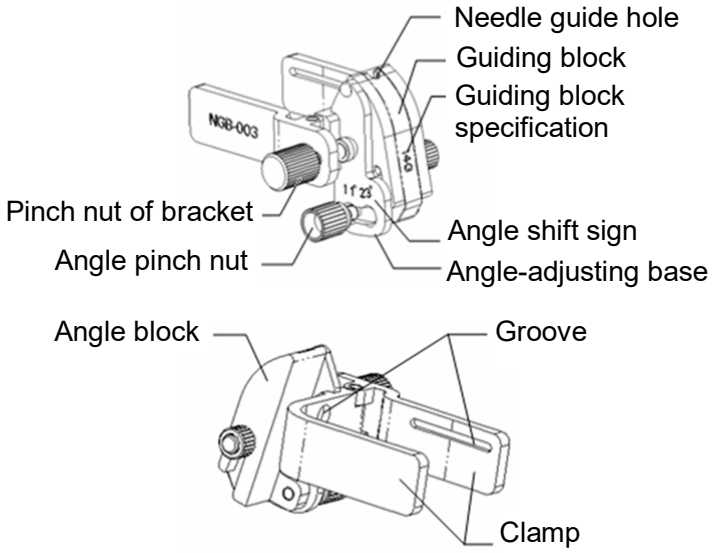

■ NGB-022

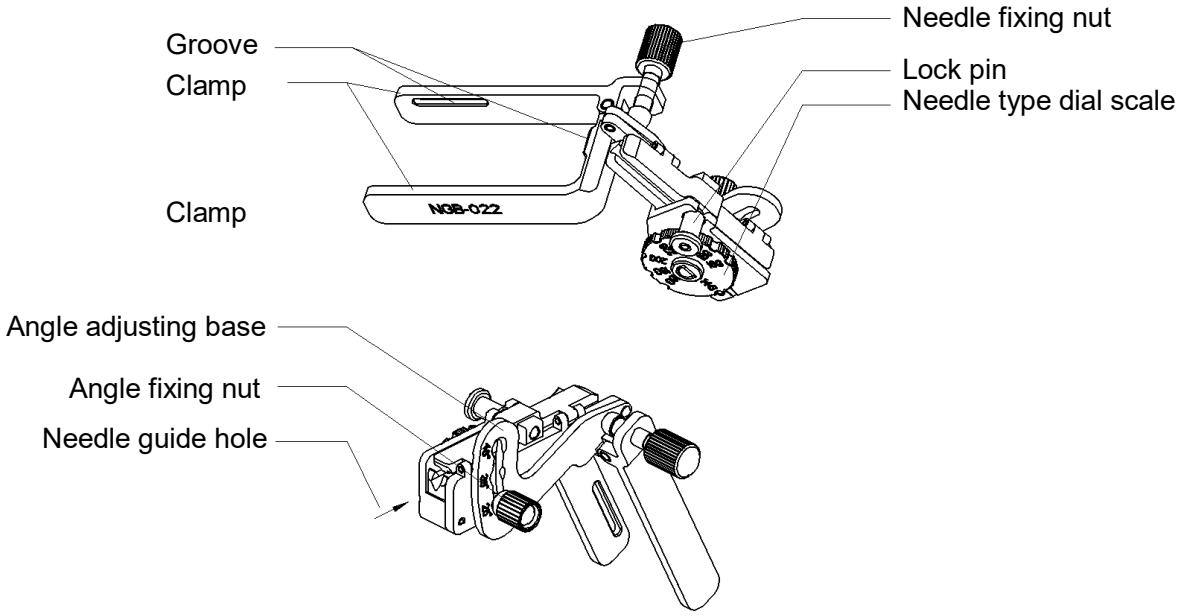

■ NGB-036

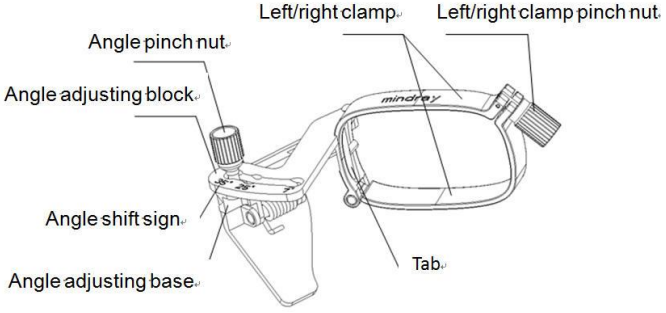

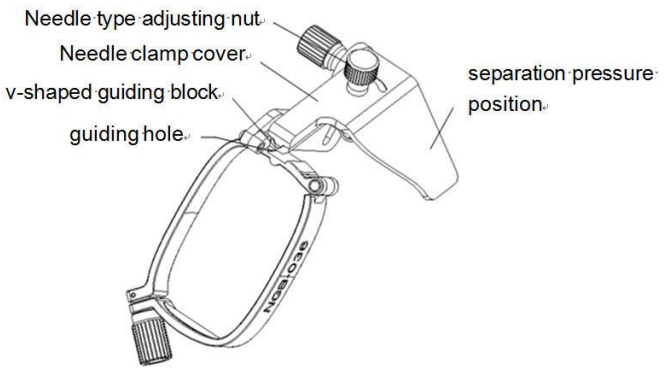

■ NGB-043

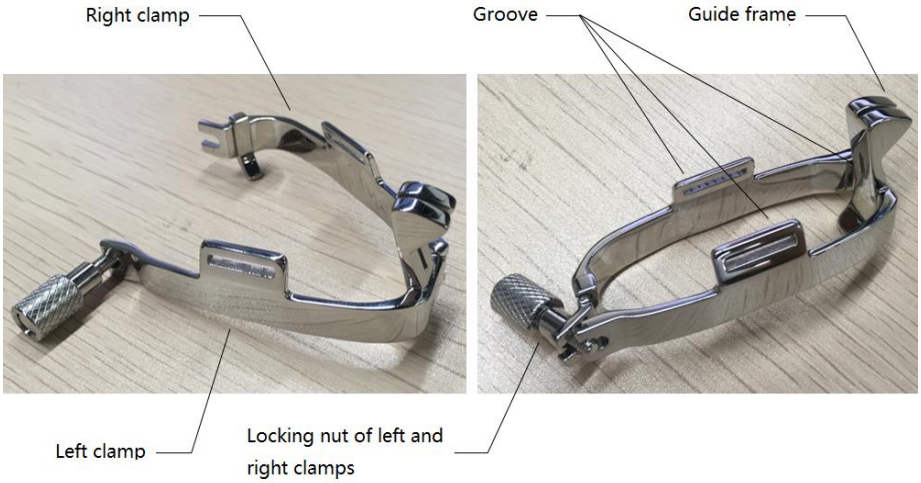

■ NGB-044

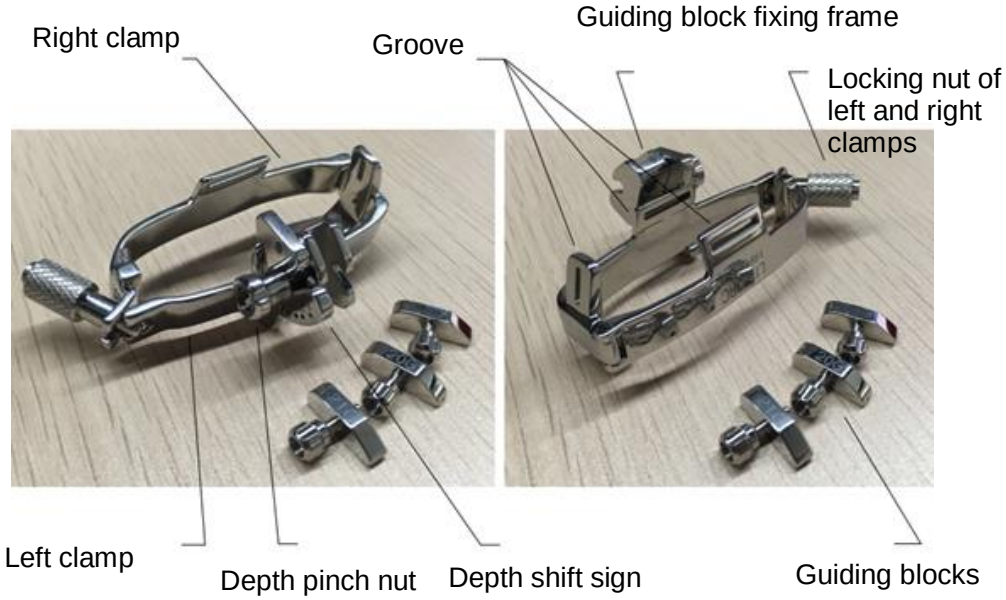

13.2.2 Basic Procedures for Biopsy Guiding

1. Select the correct needle-guided bracket and needle and install them properly. For details, see “13.2.3 Needle-Guided Bracket Inspection and Installation.”
2. Verify the biopsy guide line. See chapter “13.2.6 Verifying the Biopsy Guide Line” for details.
3. Tap [Biopsy] to enter the biopsy.

   Tips:

   - If the current probe has no corresponding bracket, or the image is frozen and the guide line was hidden before the image was frozen, then you cannot enter the Biopsy menu.
   - Before entering the Biopsy menu, the system will display the prompt “Please verify guidelines before biopsy.”
4. Select the bracket and guide line according to the actual situation.
5. In the Biopsy menu, tap [Alignment] to enter the Verify menu to verify the guide line. After verification, tap [Save] to save the parameter setting. Then tap [Exit] to return to the Biopsy menu.

   Tips:

   - If you changed the probe or needle-guided bracket during the biopsy, verify the guide line again.
   - When exiting the Verify menu without saving, the system will display the prompt “Data have changed. Do you want to save the changes?” Tap [Yes] to save the setting and return to the Biopsy menu.
6. Scan to locate the target. Center the target in the electronic guidezone path.
7. Direct the needle into the area of interest for specimen.
8. After extracting the biopsy sample, gently remove the probe from the body.

   To exit the Biopsy menu: tap [Biopsy].
9. Disassemble the items and properly dispose of these items as required.

⚠ **DANGER:**	**Failure to match the guide zone displayed to the guide may cause the needle to track a path outside the zone.** **It is extremely important that when using the adjustable angle biopsy guides, the angle displayed on the screen matches the angle set on the guide, otherwise the needle will not follow the displayed guide zone and this could result in repeated biopsies or animal injury.**

13.2.3 Needle-Guided Bracket Inspection and Installation

13.2.3.1 Inspection of the Needle-Guided Bracket

Be sure to perform inspections before and after using the needle-guided bracket. If an abnormality is found on the needle-guided bracket, immediately stop using it and contact the MINDRAY ANIMAL MEDICAL Customer Service Department or a sales representative.

1. Sterilize the needle-guided bracket before and after use.
2. Confirm that the needle-guided bracket is free from damage, deformation, stripping, malfunction, loose or missing parts.
3. Confirm that the needle-guided bracket is securely mounted in the correct position.

13.2.3.2 Installing the Needle-Guided Bracket

■ NGB-007

Metal/needle detachable needle-guided bracket:

1. Put the sterile probe sheath on.
2. Hold the probe in one hand, select the correct needle-guided bracket and hold it with the other hand. Match the groove and tab with the tab and groove of the probe respectively. Mount the bracket onto the probe.

3. Screw the pinch nut of the needle-guided bracket to ensure that the needle-guided bracket is properly installed on the probe.
4. Select a suitable guiding block and push it into the groove above the angle block, then clamp it tightly.

5. Screw the block's nut to secure the block.
6. Insert a biopsy needle with the same specification as that of the guiding block into the guiding block hole.

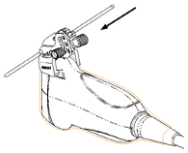

Plastic needle-guided bracket:

1. Put the sterile probe sheath on.
2. Hold the probe in one hand, select the correct needle-guided bracket and hold it with the other hand. Align the tab at the narrow end of the needle-guided bracket with the groove of the probe, then push the needle-guided bracket forward, so the tabs and grooves of the needle-guided bracket align with the grooves and tabs of the probe.

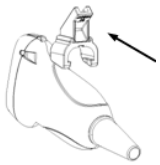

3. Check manually to confirm that the needle-guided bracket is securely installed on the probe.
4. Select a suitable guiding block and push it into the groove above the angle block, then clamp it tightly.

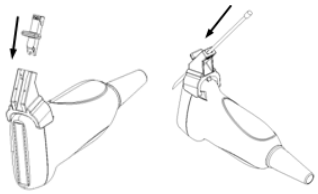

5. Insert a biopsy needle with the same specification as that of the guiding block into the guiding block hole.

■ NGB-011

1. Connect the locating groove on the clamp with the two raised edges on the probe head and align the locating pit of the clamp with the convex point on the probe head.
2. Turn the grip knob at the tail of the needle-guided bracket tightly.

■ NGB-022

1. Put on the sterile transducer sheath.
2. Hold the transducer by one hand, select the proper needle-guided bracket, and hold it with the other hand. Match the groove of the bracket with the tab of the transducer. Amount the bracket onto the transducer.

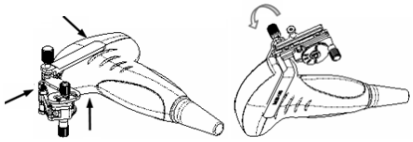

3. Screw the pinch nut of the needle-guided bracket to confirm that the needle-guided bracket is properly installed on the transducer.
4. Adjust the dial scale to the required needle type shift, and then screw the needle fixing nut to lock the dial scale.(To adjust the dial scale you have to loosen the needle fixing nut first.)
5. Pull the lock pin and close the V-shaped cover to fix the lock pin in the groove of the needle type adjusting base, so as to install the needle into the guiding hole.

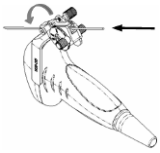

■ NGB-016

1. Put on the transducer sheath.
2. Select a proper needle-guided bracket, and match the groove with the tab of the transducer. Mount the bracket onto the transducer.

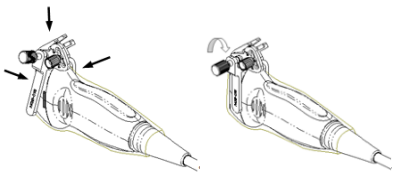

3. Screw the pinch nut of the needle-guided bracket to confirm that the needle-guided bracket is properly installed on the transducer.
4. Select the appropriate guiding block, and fit it into the groove on the angle block.

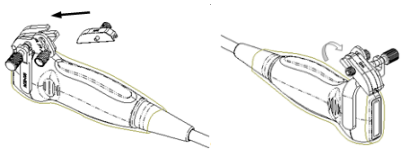

5. Screw the nut on the guiding block to secure the guiding block with the needle-guided bracket.
6. Insert the needle of the same specification with that of the guiding block into the guiding hole.

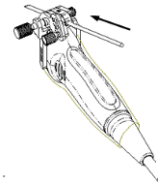

■ NGB-018

1. Put the sterile probe sheath on.
2. Select a suitable needle-guided bracket and match the groove to the tab of the transducer. Mount the bracket onto the transducer. The needle-guided brackets may be different from each other, but the methods are the same.

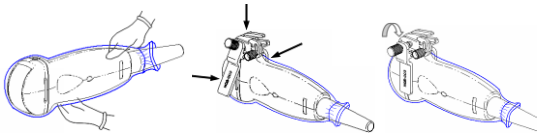

3. Screw the pinch nut of the needle-guided bracket to ensure that the needle-guided bracket is properly installed on the transducer.
4. Select a suitable guiding block and push it into the groove above the angle block.

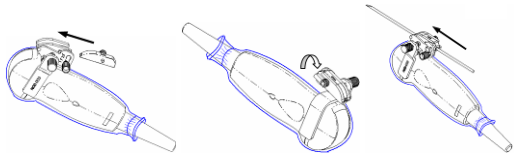

5. Screw the block's nut to secure the block.
6. Insert a biopsy needle with the same specification as that of the guiding block into the guiding block hole.

■ NGB-036

1. Put on the sterile probe sheath.
2. Select a proper needle-guided bracket, and match the tab with the groove of the transducer. Mount the bracket onto the transducer.

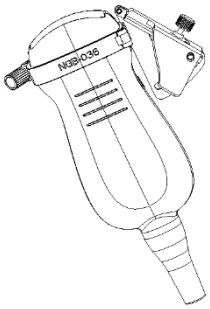

3. Rotate the clamping nuts of the guided bracket on the right and left side to fix the bracket and the transducer. Rotate the needle-type adjusting nut to the ultimate position as shown in the figure.

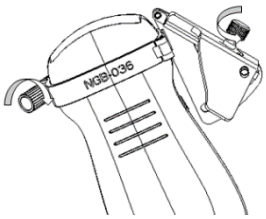

4. Hold the transducer. Press the biopsy needle pressure position to separate it from needle guided V-shaped block.

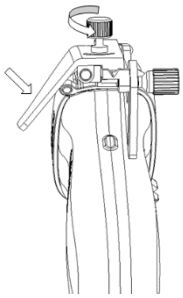

5. Put the needle into the needle guided-bracket, and the needle leans to V-shaped block.

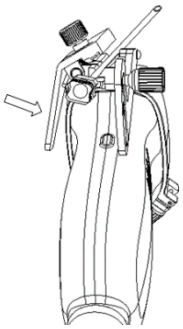

6. Hold the transducer, and release the pressure position of the needle. Adjust the needle-type adjusting nut manually (following the direction of the arrow). The needle moves smoothly at the vertical direction due to its gravity.

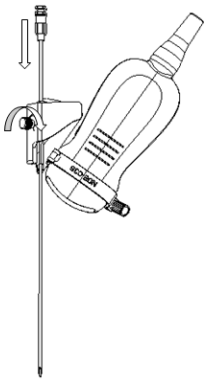

■ NGB-043

1. Put on the sterile probe sheath.
2. Hold the probe in one hand, select the correct needle-guided bracket and hold it with the other hand. Match the grooves of the needle-guided bracket to the tabs of the transducer. Mount the bracket onto the transducer, and rotate the locking nut in the direction of the arrow shown on the figure to fix the bracket.

3. Insert a biopsy needle with the same specification as that of the guiding block into the guiding block hole. Adjust the biopsy angle of the needle, and ensure that the needle can be adjusted continuously within the range of 30º -85º .

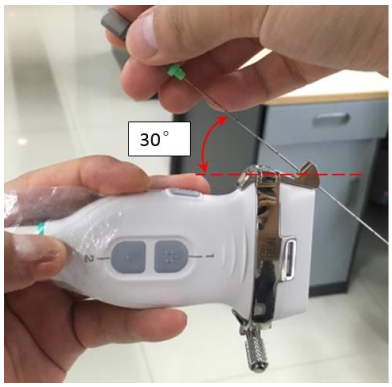

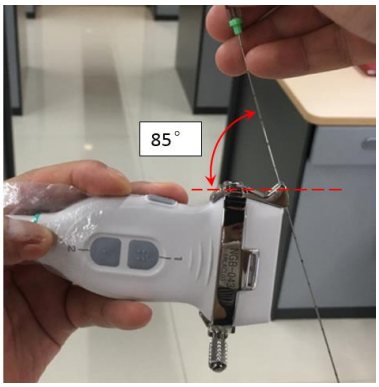

■ NGB-044

1. Put on the sterile probe sheath.
2. Hold the probe in one hand, select the correct needle-guided bracket and hold it with the other hand. Match the grooves of the needle-guided bracket to the tabs of the probe. Mount the bracket onto the probe, and rotate the locking nut to fix the bracket.

3. Select a suitable guiding block and loosen its nut, install the guiding block to the guiding block fixing frame, then tighten the block nut tightly.

4. Insert a biopsy needle with the same specification as that of the guiding block into the guiding block hole.

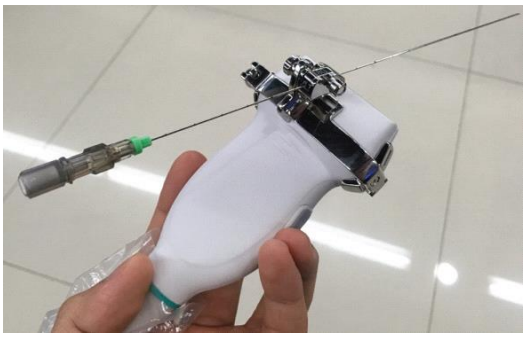

⚠**CAUTION:**	**Ensure that all guide parts are properly fixed prior to performing a biopsy.**

13.2.4 Biopsy Menu

Tap [Biopsy]from the right side of the operating panel (you may need to swipe downwards to see the button) to enter Biopsy and tap [Image] to open the biopsy menu.

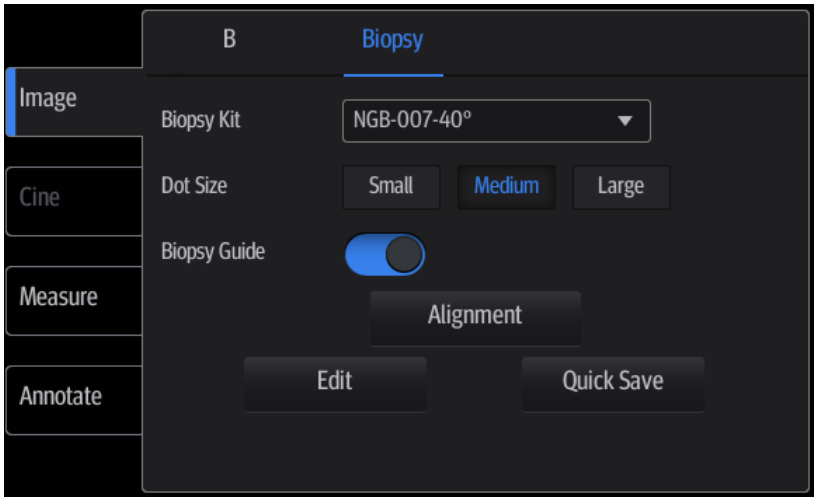

- Select the biopsy bracket angle/guide line

  If the needle-guided bracket supports more than one biopsy angle, select the angle/guideline by tapping the drop-down list [NGB-XXX-XX] (last two letters are angle or the guide line).

- Select the guide line dot size

  Use [Dot Size] to select the dot size from Small, Medium and Big.

13.2.5 iNeedle (Needle Visualization Enhancement)

During a biopsy, the metal needle attached to the probe pierces the tissue at a certain angle. Due to the needle's acoustic impedance, the ultrasonic beam cannot penetrate the metal needle and a reflecting boundary is formed. As in Figure 1, if the deflection angle is very large, the needle display is not clear.

In deflected ultrasound transmission, the beam direction is perpendicular to the needle direction and the reflection direction is the same as the needle, as shown in Figure 2, meaning the needle display in the ultrasound image is very clear. The system provides additional deflection transmission that is approximately perpendicular to the metal needle when the normal transmission (perpendicular to the transducer surface) is being processed. The deflection angle can be chosen by the user.

iNeedle is an option.

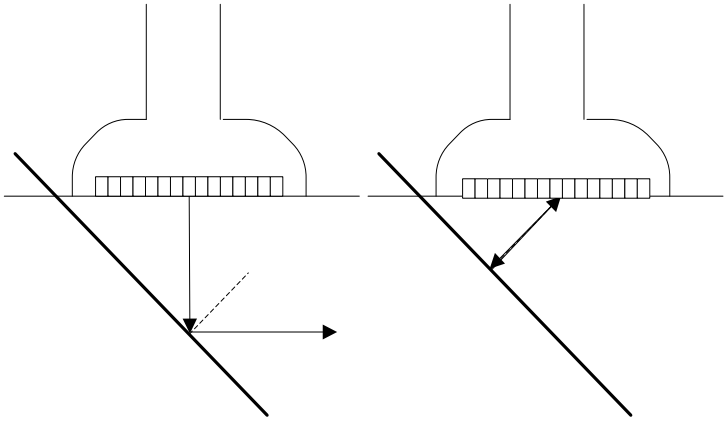

Figure 1 Figure 2

To enter/exit iNeedle

■ To enter iNeedle

Tap

on the left part of the image area.

■ To exit iNeedle

Tap[iNeedle] again or tap [B] to enter B mode.

■ Best angle indication

In iNeedle mode, recommended needle angle is given on the top of the screen. As shown in the above figure, the current recommended angle is 50° to the horizontal plane.

Needle Direction

Description	This function adjusts the biopsy needle direction according to actual direction of needle insertion. The iNeedle region changes correspondingly.
Operation	Tap [Image] to open the menu, and use [Needle Dir.] control to select the direction.

B/iNeedle

Description	This function is used to display the B image and iNeedle image synchronously.

Operation Tap [Image] to open the menu and use [B/iNeedle] control to turn on/off the function.

13.2.6 Verifying the Biopsy Guide Line

⚠ **WARNING:**	**Prior to each biopsy procedure, be sure to verify the guide line.** **If the needle is not consistent with the guide line, DO NOT perform the biopsy procedure.**

NOTE:	You can perform guide line verification on a single live B/C image, and all biopsy-irrelevant operations are forbidden.

Adjusting the needle mark is necessary before each biopsy procedure.

1. Confirm that the needle-guided bracket has been installed securely in the correct position.
2. Prepare a container filled with sterile water.
3. Place the head of the probe in the sterile water and place a biopsy needle in the needle guide.
4. When the biopsy needle appears on the image, select [Biopsy] -> [Alignment] to align the guide line with the biopsy needle.

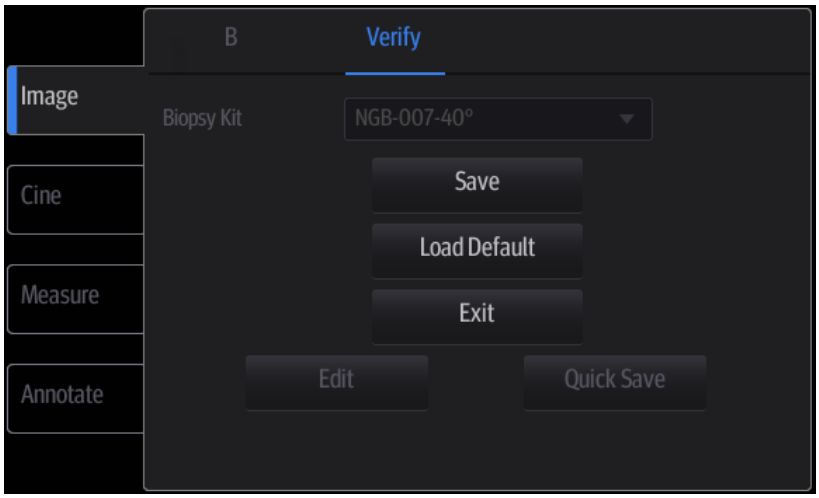

Tap [Alignment] in the Biopsy menu to enter the Biopsy Verify menu.

- Adjust the guide line position

  Tap and drag the top dot on the line to change the position of the guide line.
- Adjust the angle

  Tap and drag the bottom dot on the line to change the guide line angle.
- Save the verified settings

  After the position and angle of the guide line are adjusted, tap [Save] and the system saves the current guide line settings. If biopsy is entered again, the displayed Position and Angle are the verified value.
- Restore the factory default settings

  Tap [Load Default] and the position and angle of the guide line are restored to the factory default settings.
- Exit biopsy verify status

Tap [Exit] and the system exits the guide line verification status.

13.2.7 Removing the Needle-Guided Bracket

- NGB-007
  - Metal needle-guided bracket:
    a) Loosen the guiding block's nut and slightly move the guiding block in the direction of the needle's tail.
    b) Separate the residual part of the needle-guide bracket and the probe from the needle.
    c) Loosen the bracket's pinch nut and remove the needle-guided bracket from the probe.
  - Plastic needle-guided bracket:
    a) Slightly move the guiding block in the direction of the needle's tail.
    b) Separate the residual part of the needle-guide bracket and the probe from the needle.
    c) Remove the needle-guided bracket support from the probe.
- NGB-011

  Hold the probe and the needle-guided bracket, then open the grip knob of the needle-guided bracket.
- NGB-022

1. Pull the lock pin and open up the V-shaped cover to expose the needle.

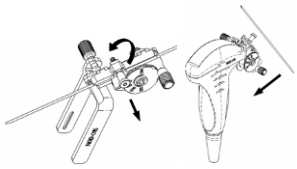

2. Separate the bracket and the transducer from the needle.
3. Screw the pinch nut to release the needle-guided bracket.

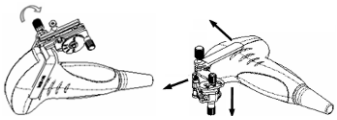

4. Separate the bracket and the transducer.

- NGB-016

1. Unscrew the nut on the guiding block to release the biopsy needle.

2. Remove the guiding block in the direction of the needle tail, and then remove the needle.
3. Screw the pinch nut of the bracket to release the needle-guided bracket.

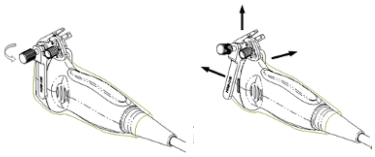

4. Separate the transducer and the needle-guided bracket.

- NGB-018

1. Loosen the guiding block's nut and slightly move the guiding block in the direction of the needle's tail.

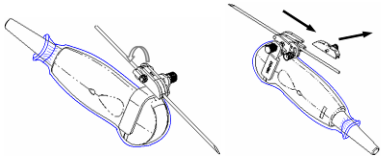

2. Separate the residual part of the needle-guide bracket and the transducer from the needle.
3. Loosen the bracket's pinch nut and remove the needle-guided bracket from the transducer.

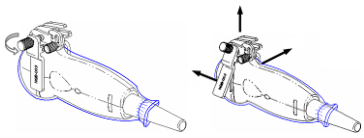

■ NGB-036

1. Hold the transducer. Press the biopsy needle to separate the needle from pressure position of the needle.

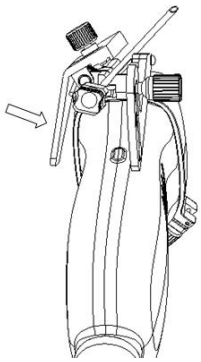

2. Separate the bracket and the transducer from the needle.
3. Rotate the clamping nuts of the needle guided-bracket on right and left side (following the direction of the arrow). The needle guided-bracket is separate from the transducer. Hold the transducer and take out the bracket.

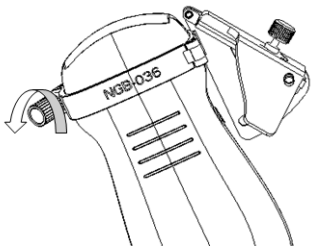

■ NGB-043

1. Hold the probe, and remove the biopsy needle form the guiding hole of the guiding block.
2. Rotate the locking nut in the direction of the arrow shown on the figure to separate the bracket from the probe.

■ NGB-044

1. Hold the probe and remove the needle.
2. Loosen the guiding block nut, and remove it from the guiding block fixing frame.

3. Rotate the clamping nuts of the needle guided-bracket. The needle guided-bracket is separate from the probe. Hold the probe and take out the bracket.

13.2.8 Clean and Sterilize the Needle-Guided Bracket

CAUTION:

Needle-guided brackets whose name starts with NGB are reusable, and need thorough cleaning and sterilization before and after each biopsy.

Follow local regulations when selecting and using the disinfectant.

Repeated sterilization may degrade the safety and performance of the needle-guided bracket. Before use, please check whether the needleguided bracket has defects such as deformation and rusting. If such defects exist, the bracket has reached the end of its service life. In this case, stop using it and contact the Mindray Animal Medical service department.

After disinfection, rinse the probe thoroughly with sterile water to remove all chemical residues. Chemical residues on the probe may be harmful to the human body.

It is recommended to use immersion sterilization for plastic needle-guided brackets and high-pressure steam sterilization for metal needle-guided brackets.

For detailed operations about the cleaning solvent, sterilant and hightemperature steam sterilizer, see the respective operator's manuals provided by the manufacturer

Cleaning

Perform the following procedure:

1. Wear a pair of gloves to prevent infection.
2. After use, immerse the needle-guided bracket in distilled water immediately to prevent dirt from drying. Wipe the entire surface of the needle-guided bracket by using a piece of disposable lint-free soft cloth to remove coarse dirt.
3. Prepare a cleaning solvent (enzymatic or neutral pH detergent, e.g., liquinox, MetriZyme) by using distilled or softened water in accordance with the operator's manual provided by the manufacturer.
4. Detach all the detachable parts of the needle-guided bracket and immerse the needle-guided bracket and all its parts fully in the cleaning solvent for at least 1 minute or a period specified by the manufacturer.
5. Immerse the needle-guided bracket and all its parts fully in the cleaning solvent. Wipe and wash the surface and connecting parts of the needle-guided bracket gently by using a soft brush until no dirt is visible. Place the needle-guided bracket inside an ultrasonic cleaner and perform ultrasonic cleaning for 3–5 minutes.
6. Rinse the needle-guided bracket thoroughly by using a large amount of distilled or softened water (about 2 gallons) at room temperature for about 30 s to remove the residual dirt and cleaning solvent. Repeat the operation twice.
7. Wipe away the water on the needle-guided bracket by using a piece of disposable lint-free soft cloth.
8. Inspect the needle-guided bracket. If visible dirt still exists, repeat the preceding steps to wash the bracket until it is all clean.

Sterilization

Perform the following procedure:

1. Wear a pair of gloves to prevent infection.

2. Clean thoroughly in accordance with the cleaning procedure before sterilization
3. Sterilize the needle-guided bracket by using an appropriate method.

Method	Procedures
Sterilant solution	Follow the following steps: 1. Prepare a sterilant by using sterile distilled water when necessary. Recommended sterilant: Glutaraldehyde (2.4%), Cidex Activated Dialdehyde Solution 2. Immerse the needle-guided bracket fully in the sterilant and shake the bracket appropriately to remove any bubbles on the surface. Use a syringe to draw an appropriate amount of sterilant and inject the sterilant into the hole to remove the bubbles inside the hole if necessary. For details about the immersion duration, see the operator's manual provided by the manufacturer. 1. After sterilization, wash the needle-guided bracket thoroughly by using a large amount of sterile distilled water (about 2 gallons) at room temperature for about 30 s to remove the residual sterilant. Repeat the operation twice. 2. Dry the needle-guided bracket by using a piece of sterile disposable lint-free soft cloth.
Sterilizing system	Follow the following steps: 1. Package the needle-guided bracket in accordance with the sterilization requirements of surgical instruments. 2. Place the packaged needle-guided bracket inside a high-temperature steam sterilizer and perform sterilization. The sterilization parameters are 121 °C and 30 minutes for a gravity displacement steam sterilizer and are 132 °C and 4 minutes for a dynamic-airremoval steam sterilizer. 3. Take out the sterilization package after sterilization and dry it in an oven at 60 °C for 20 minutes to 30 minutes. 4. Keep the sterilization package together with other sterilized surgical instruments in a sterile item storage area.

4. Store the needle-guided bracket in a cool, clean and dry environment.

13.2.9 Storage and Transportation

1. Do not use the carrying case for storing the needle-guided bracket. If the carrying case is used for storage, it may become a source of infection.
2. Between examinations, keep the needle-guided bracket in a sterile environment.
3. If the needle-guided bracket is sent to your MINDRAY ANIMAL MEDICAL representative for repair, be sure to disinfect or sterilize it and keep it in the carrying case to prevent infection.

4. Sterilize the carrying case as necessary.
5. Store or transport the needle-guided bracket under the following ambient conditions:
   - Ambient temperature: -20°C to 55°C
   - Relative humidity: 30% to 85% (no condensation)

13.2.10 Disposal

Be sure to sterilize the needle-guided bracket before disposing of it.

Contact your MINDRAY ANIMAL MEDICAL representative when disposing of this device.

13.3 Middle Line

Middle Line helps to locate and observe the focus point of lithotripsy wave during lithotripsy treatment. By means of providing information for the lithotripsy machine as well as a tool for watching the procedure of lithotripsy in real-time, you can adjust the intension and frequency of the lithotripsy wave through lithotripsy machine.

NOTE:	This function in the ultrasound system is for lesion (stone) location and observation only. For details, please refer to lithotripsy machine accompanying manuals.

■ To enter the mode: tap [Middle Line] in the iNeedle menu.
- The middle line is a vertical dotted line located in the middle of the screen, the position and direction of which cannot be changed.
- There is a mark icon of “×” located on the middle line which can be moved up and down along the line by rolling the track ball.
- The depth of the mark is displayed in the image parameter area of the screen.

14 DVR Recording

NOTE:	Strictly observe the procedures described here to perform the recording and replaying operations; otherwise it may result in data loss or system malfunction.

The system provides built-in DVR recording function. You can use the DVR to record and replay videos and audios that can be stored in DVD disc or hard disc.

The recorded video is AVI format; you can save it in the hard disk drive, burn to the DVD or export to the USB disk.

When the built-in DVR is in normal status, the icon is displayed.

14.1 Recording

After recording, the system will save the recording file automatically, you can select to save in local disk, U disk or optical disk.

1. Perform ultrasound exams, select appropriate views and adjust parameters to prepare for recording.
2. Tap to open the dialogue box and select desired recording type: Local/USB/CDROM;
3. Tap [Record] to start recording, and the DVR icon displays as in recording status.

   During the recording process, you can perform imaging mode switching, comments adding, body mark adding and measurements.
4. Tap [Stop] to stop recording, the DVR icon turns into data transfer status .
   - If USB/CDROM is selected, the system sends the recorded file to the target storage media (USB disk or DVD optical disk drive) in the meantime.
   - If Local is selected, the system saves the file to the path: D/M6/DVR.

   In the task management screen, you can check transferring status.

14.2 Sending Image

The system also supports exporting recorded images that are saved in the local disk.

1. Tap to open the dialogue box, and tap [Local Video Manage] to enter the managing dialogue box.

   Tap [Rename] to rename the video file.
2. Select the destination and the target file, tap [Send] to send the file to the selected path. During sending progress, the icon displays as .

14.3 DVR Video Replaying

You can replay the video and audio record.

■ Replay on PC

Connect the USB disk or optical disk with the file to the PC, and open the file directly.

■ Replay on the ultrasound system

1. Tap to open the dialogue box and select desired playing type: Local/USB/CDROM.
2. Tap[Play] to open the dialogue box.
3. Select the path and name for the file and then tap [OK] to replay the file, or double-click the file name directly.
4. Tap the screen to exit.

15 Acoustic Output

This section of the operator's manual applies to the overall system, including the main unit, probes, accessories and peripherals. This section contains important safety information for device operators pertaining to acoustic output and how to control animal exposure through use of the ALARA (as low as reasonably achievable) principle. This section also contains information regarding acoustic output testing and real-time output display.

Read this information carefully before using the system.

15.1 Concerns with Bioeffects

Diagnostic ultrasound is recognized as being safe. There have been no reports of injuries to animals caused by diagnostic ultrasound.

However, it cannot be stated categorically that ultrasound is 100% safe. Studies have revealed that ultrasound with extremely high intensity is harmful to body tissues.

Diagnostic ultrasound technology has made a great leap forward during the last several years. This rapid advance has generated concerns about the potential risk of bioeffects when new applications or diagnostic technologies become available.

15.2 Prudent Use Statement

Although there are no confirmed biological effects on animals caused by exposure from present diagnostic ultrasound instruments, the possibility exists that such biological effects may be identified in the future. Thus ultrasound should be used in a prudent manner to provide medical benefit to the animal. High exposure levels and long exposure times should be avoided while acquiring the necessary clinical information.

15.3 ALARA Principle (As Low As Reasonably Achievable)

The ALARA principle must be practiced when using ultrasound energy. Practicing ALARA ensures that the total energy level is controlled below a low enough level at which bioeffects are not generated while diagnostic information is being accumulated. The total energy is controlled by output intensity and total radiation time. The output intensity necessary for examinations differs depending on the animal and the clinical case.

Not all examinations can be performed with an extremely low level of acoustic energy. Controlling the acoustic level at an extremely low level leads to low-quality images or insufficient Doppler signals, adversely affecting the reliability of the diagnosis. However, increasing the acoustic power more than necessary does not always contribute to an increase in the quality of the information required for diagnosis, rather increasing the risk of generating bioeffects.

Users must take responsibility for the safety of animals and utilize ultrasound deliberately. Deliberate use of ultrasound means that the output power of ultrasound must be selected based on the ALARA principle.

Additional information regarding the concept of ALARA and the possible bioeffects of ultrasound is available in a document from the AIUM (American Institute of Ultrasound Medicine) entitled "Medical Ultrasound Safety."

15.4 MI/TI Explanation

15.4.1 Basic Knowledge of MI and TI

Mechanical Bioeffect and Thermal Bioeffect

The relationship of various ultrasound output parameters (frequency, acoustic pressure and intensity, etc.) to bioeffects is not fully understood at present. It is recognized that two fundamental mechanisms may induce bioeffects. One is a thermal bioeffect involving tissue absorption of ultrasound, and another is a mechanical bioeffect based on cavitations. Thermal Index (TI) gives the relative index of temperature increase by thermal bioeffect, and Mechanical Index (MI) gives the relative index of mechanical bioeffect. TI and MI indices reflect instantaneous output conditions. They DO NOT consider the cumulative effects of the total examination time. TI and MI models contain practical simplifications for complex bioeffect interactions. The operator must be aware that the actual worst case temperature rise may be up to several times higher than the displayed TI value.

- MI (Mechanical Index)

  The mechanical bioeffects are the result of Compression and decompression of insonated tissues with the formation of micro bubbles that can be referred to as cavitations.

  MI is an index that shows the possibility of cavitation generation based on acoustic pressure, and the value at which the peak rarefactional acoustic pressure is divided by the square root of the frequency. Therefore, the MI value becomes smaller when the frequency is higher or the peak rarefactional acoustic pressure is lower, and it becomes more difficult to generate the cavitations.

$$MI = \frac{P_{r,\alpha}}{\sqrt{f_{awf}} \times C_{MI}}$$

  C_{MI} = 1 (MPa / $\sqrt{\text{MHz}}$)

  For the frequency 1 MHz and the peak rarefactional acoustic pressure 1 MPa, MI becomes 1. It is possible to consider MI as one threshold of cavitation generation. It is particularly important to keep the MI value low when both gases and soft tissues exist together, such as with lung exposure in cardiac scanning and bowel gas in abdominal scanning.

- TI (Thermal Index)

  The TI is determined by the ratio of the total acoustic power to the acoustic power required to raise the tissue temperature by 1°C. In addition, because the raise in temperature can be greatly different according to tissue structures, TI is divided into three kinds: TIS (Soft-tissue Thermal Index), TIB (Bone Thermal Index) and TIC (Cranial-bone Thermal Index).

  TIS: Thermal index related to soft tissues, such as abdominal and cardiac applications.

  TIB: Thermal index for applications such as fetal (second and third trimester) or neonatal cephalic (through the fontanel) applications, in which the ultrasound beam passes through soft tissue and the focal region is in the immediate vicinity of bone.

  TIC: Thermal index for applications such as pediatric and adult cranial applications, in which the ultrasound beam passes through bone near the beam entrance into the body.

  Although the output power is automatically controlled for the selected applications, high TI values should be kept to a minimum or avoided in obstetric applications. WFUMB (World Federation for Ultrasound in Medicine and Biology) guidelines state that temperature increases of 4°C for 5 minutes or more should be considered as potentially hazardous to embryonic and fetal tissue.

  The smaller the MI/TI values, the lower the bioeffects.

15.4.2 MI/TI Display

TI and MI values are displayed in the top part of the screen in real time by preset (see chapter “12.1 System Preset” for details.) The operator should monitor these index values during examinations and ensure that exposure time and output values are maintained at the minimum amounts required for effective diagnosis.

NOTE:	If a value of MI or TI exceeds 1.0, the ALARA principle must be practiced.

The display precision is 0.1.

Display accuracy of MI is ≤14.7%, and TI is ≤28.5%.

15.5 Acoustic Power Setting

- Acoustic power adjustment

  Use the [A.power(%)] on the image menu to adjust the acoustic power percentage. Its value is displayed on the corresponding item, as well as on the screen. The greater the acoustic power percentage, the greater the current acoustic output. When the image is frozen, the system stops transmitting acoustic power.

- Default acoustic power setting

  Selection of diagnostic applications is the most important factor in controlling ultrasound output. The permissible level of intensity of ultrasound differs depending on the region of interest. For fetal examinations, in particular, much care must be exercised.

  Within this system, imaging setups can be created using the ultrasound output set by you. **Once you set the preset settings, the system's default setting values may be changed and invalid. The user is responsible for any change to the default settings.**

- Adjusting range

  Initial power: 3.2% to 100%*

  Definition of 100%: the maximum acoustic power of a probe determined by the increase in probe surface temperature in the selected mode and the acoustic power restrictions specified by the FDA.

  Default settings of the acoustic power value refer to the best image quality for the probe. The larger the acoustic power value, the better the image quality.

NOTE:	This system automatically returns to the settings whenever changes are made to the values (when you turn on the power, switch between probes, tap [End] in the bottom-left corner of the operating panel, or select [Save] or [Cancel] in the preset menu). In the factory default settings, the Acoustic Output is limited to below 100%. Following the ALARA restriction, you are allowed to increase the acoustic power under FDA 510(k) Guidance-Track 3 limits and to set it in the image preset screen.

The acoustic output of the system has been measured and calculated in accordance with IEC60601-2-37: 2015, FDA 510(K) GUIDANCE, IEC 62359: 2017, Ultrasonics-Field characterization-Test methods for the deter mination of thermal and mechanical indices related to medical diagnostic ultrasonic fields.

15.6 Acoustic Power Control

A qualified operator may use the system controls to limit the ultrasound output and to adjust the quality of the images. There are three categories of system controls relating to output. They are:

- Controls that have direct effect on the output
- Controls that indirectly control the output
- Controls that are receiver controls

■ Direct controls

It is possible to control, if necessary, the acoustic output with the “A.power” item on the screen. In this case, the maximum value of the acoustic output never exceeds an MI of 1.9 and an $I_{SPTA.3}$ of 720 mW/cm^2 in any mode of operation.

■ Indirect controls

The controls that indirectly affect output are the many imaging parameters. These are operating modes, frequency, focal point positions, overall depth and PRF.

The operating mode determines whether the ultrasound beam is scanning or non-scanning. Thermal bioeffect is closely connected to M mode, Doppler and Color mode. Acoustic attenuation of tissue is directly related to probe frequency. The focal point is related to the active aperture of the probe and beam width. For higher PRF (pulse repetition frequency), the more output pulses occur over a period of time.

■ Receiver controls

The receiver controls (for example, gain, dynamic range and image post-processing, etc.) do not affect output. These controls should be used, when possible, to improve the image quality before using controls that directly or indirectly affect output.

15.7 Acoustic Output

15.7.1 Derated Ultrasonic Output Parameters

In order to determine the relevant Ultrasonic Output Parameters, a method is used which allows for the comparison of ultrasound systems which operate at different frequencies and are focused at different depths. This approach, called “derating” or “attenuating”, adjusts the acoustic output as measured in a water tank to account for the effect of ultrasound propagation through tissue. By convention, a specific average intensity attenuation value is used, which corresponds to a loss of 0.3 dB/cm/MHz. That is, the ultrasound intensity will be reduced by 0.3 dB/MHz for every centimeter of travel from the probe. This can be expressed by the following equation:

$$I_{atten} = I_{water} \times 10^{(-0.3/10 \times f_c \times z)}$$

Where I_{atten} is the attenuated intensity, I_{water} is the intensity measured in a water tank (at distance z), fc is the center frequency of the ultrasound wave (as measured in water) and z is the distance from the probe. The equation for attenuating pressure values is similar except that the attenuation coefficient is 0.15 dB/cm/MHz, or one-half the intensity coefficient. The intensity coefficient is double the pressure coefficient because intensity is proportional to the square of pressure.

The attenuation coefficient chosen, 0.3 dB/cm/MHz, is significantly lower than any specific solid tissue in the body. This value was chosen to account for fetal examinations. In early trimester ultrasound fetal examinations, there may be a significant fluid path between the probe and the fetus, and the attenuation of fluid is very small. Therefore the attenuation coefficient was lowered to account for this.

15.7.2 Limits of Acoustic Output

In accordance with the FDA Track 3 requirements, the derating (or attenuated) approach was incorporated into the FDA Acoustic Output Limits, as listed below. The maximum acoustic output level from any probe in any operating mode is expected to fall below these limits.

FDA Maximum Acoustic Output Limits for Track 3 (Attenuated Values)

Application	$I_{spta.3}$ (mW/cm^2)	$I_{sppa.3}$ (W/cm^2)		MI
Regions (except eyes)	≤ 720	≤ 190	or	≤ 1.9
Ophthalmic	≤ 50	/		≤ 0.23

15.7.3 Differences between Actual and Displayed MI and TI

In operation, the system will display the Acoustic Output Parameters Thermal Index (TI) or Mechanical Index (MI) (or sometimes both parameters simultaneously) to the operator. These parameters were developed as general indicators of risk from either thermal or mechanical action of the ultrasound wave. They serve to indicate to the operator whether a particular system setting increases or decreases the possibility of Thermal or Mechanical effect. More specifically, they were designed to assist in the implementation of the ALARA principle. As an operator changes a given system control, the potential effect of the change in output is indicated. However, the Thermal Index is not the same as the raise in temperature in the body, for several reasons. First of all, in order to provide a single display index, a number of simplifying assumptions had to be made. The biggest assumption was the use of the attenuating formula described above, which is much lower than the actual value for most tissues within the body. Scanning through muscle or organ tissue, for example, will produce much higher attenuation than 0.3 dB/cm/MHz. Significant simplifications were also made for the thermal properties of tissue. Therefore, scanning through highly-perfused tissue, such as the heart or vasculature, will produce significantly less thermal effect than that suggested by the Thermal Index.

Similarly, the Mechanical Index was derived to indicate the relative possibility of mechanical (cavitation) effects. The MI is based on the derated peak rarefactional pressure and the center frequency of the ultrasound wave. The actual peak rarefactional pressure is affected by the actual attenuation caused by tissue in the path between the probe and the focal point. Again, all solid tissues within the body have higher attenuation than the prescribed 0.3 dB/cm/MHz value, and therefore, the actual peak rarefactional pressure will be lower. Further, the actual peak rarefactional pressure will change depending on the region of the body being scanned.

For these reasons, the TI and MI displays should only be used to assist the operator in implementing ALARA at the time of the animal examination.

15.8 Measurement Uncertainty

The total estimated measurement uncertainty (where the total uncertainty includes uncertainties in hydrophone response, measurement, calculation and positioning) are:

Acoustic Quantities	Total Uncertainties (Standard)
Power	26.48% for non-scan modes; 6.03% for scan modes.
Frequency	0.22%
Pressure	13.01%
I_{ta}	26.48% for non-scan modes; 26.95% for scan modes.
I_{pa}	26.5%
Mechanical Index	13.01%

Acoustic Quantities	Total Uncertainties (Standard)
Total Uncertainty for TIS	26.48% for non-scan modes; 6.03% for scan modes.
Total Uncertainty for TIB	26.48% or 18.72% for non-scan modes; 6.03% for scan modes.
Total Uncertainty for TIC	26.48% for non-scan modes; 6.03% for scan modes.

15.9 References for Acoustic Power and Safety

1. “Bioeffects and Safety of Diagnostic Ultrasound” issued by AIUM in 1993
2. “Medical Ultrasound Safety” issued by AIUM in 1994
3. Marketing Clearance of Diagnostic Ultrasound Systems and Transducers, June 27, 2019. Center for Devices and Radiological Health.
4. Medical electrical equipment-Part 2-37: Particular requirements for the basic safety and essential performance of ultrasonic medical diagnostic and monitoring equipment issued by IEC in 2015
5. IEC 62359, Ultrasonics-Field characterization-Test methods for the determination of thermal and mechanical indices related to medical diagnostic ultrasonic fields, 2017.

16 EMC Guidance and Manufacturer's Declaration

The system complies with the EMC standard IEC 60601-1-2: 2014.

Intended Environments: HOME HEALTHCARE ENVIRONMENT (except for near active HF SURGICAL EQUIPMENT and the RF shielded room of an ME SYSTEM for magnetic resonance imaging).

WARNING:

1. **The use of unapproved accessories may diminish system performance.**
2. **Use of components, accessories, probes, and cables other than those specified may result in increased emission or decreased immunity of system.**
3. **Operation of system, in the case that the animal physiological signal is lower than the minimum amplitude or value specified in the product specifications, results may not be obtained (results can be obtained when the HR is in the range of 30-250 bmp or when the QRS wave amplitude is between 0.5-5 mV.)**
4. **Use of this equipment adjacent to or stacked with other equipment should be avoided because it could result in improper operation. If such use is necessary, this equipment and the other equipment should be observed to verify that they are operating normally.**
5. **Use of accessories, transducers and cables other than those specified or provided by the manufacturer of this equipment could result in increased electromagnetic emissions or decreased electromagnetic immunity of this equipment and result in improper operation.**
6. **Portable RF communications equipment (including peripherals such as antenna cables and external antennas) should be used no closer than 30 cm (12 inches) to any part of the system,including cables specified by the manufacturer. Otherwise, degradation of the performance of this equipment could result.**

NOTE:

1. The system needs special precautions regarding EMC and needs to be installed and put into service according to the EMC information provided below.
2. Other devices may interfere with this system even though they meet the requirements of **CISPR**.
3. Preventing conducted RF immunity. Due to technological limitations, the conducted RF immunity level are limited to 3Vrms level, conducted RF interference above 3Vrms may cause wrong diagnosis and measurements. We suggest that you position system further from sources of conducted RF noise.
4. Portable and mobile RF communications equipment can affects system. See tables 1, 2, 3, and 4 below.

If the system is operated within the electromagnetic environment listed in Table 2 and Table 3, the system will remain safe and will provide the following basic performances:

- Imaging;
- Doppler acoustic spectral displaying;
- Taking measurements;
- Animal information;
- Date/time information.

TABLE 1

GUIDANCE AND MINDRAY ANIMAL MEDICAL DECLARATION— ELECTROMAGNETIC EMISSIONS		
The system is intended for use in the electromagnetic environment specified below. The customer or the user of system should assure that it is used in such an environment.		
EMISSIONS TEST	**COMPLIANCE**	**ELECTROMAGNETIC ENVIROMENT－ GUIDANCE**
RF emissions CISPR 11	Group 1	The system uses RF energy only for its internal function. Therefore, its RF emissions are very low and are not likely to cause any interference in nearby electronic equipment.
RF emissions CISPR 11	Class B	The system is suitable for use in all establishments including domestic establishments and those directly connected to the public low-voltage power supply network that supplies buildings used for domestic purposes
Harmonic Emissions IEC 61000-3-2	Class A	
Voltage Fluctuations/ Flicker Emissions IEC 61000-3-3	Compliance	

TABLE 2

GUIDANCE AND MINDRAY ANIMAL MEDICAL DECLARATION— ELECTROMAGNETIC IMMUNITY			
The system is intended for use in the electromagnetic environment specified below. The customer or the user of system should assure that it is used in such an environment.			
IMMUNITY TEST	**IEC 60601 TEST LEVEL**	**COMPLIANCE LEVEL**	**ELECTROMAGNETIC ENVIRONMENT-GUIDANCE**
Electrostatic Discharge(ESD) IEC 61000-4-2	±8 kV contact; ±15 kV air	±8 kV contact; ±15kV air	Floors should be wood, concrete or ceramic tile. If floors are covered with synthetic material, the relative humidity should be at least 30%.
Electrical fast Transient / burst IEC 61000-4-4	±2 kV for power supply lines; ±1 kV for input/output lines	±2 kV for power supply lines; ±1 kV for input/output lines	Mains power quality should be that of a typical commercial or hospital environment.
Surge IEC 61000-4-5	±1 kV line(s) to line(s); ±2 kV line(s) to earth	±1 kV line(s) to line(s); ±2 kV line(s) to earth	Mains power quality should be that of a typical commercial or hospital environment.
Voltage dips, Short interruptions and voltage variation on power supply input voltage IEC 61000-4-11	0 % UT; 0,5 cycle At 0°, 45°, 90°, 135°, 180°, 225°, 270° and 315° 0 % UT; 1 cycle 70% UT for 25/30 cycle at 0° 0 % UT; 250/300 cycle	0 % UT; 0,5 cycle At 0°, 45°, 90°, 135°, 180°, 225°, 270° and 315° 0 % UT; 1 cycle 70% UT for 25/30 cycle at 0° 0 % UT; 250/300 cycle	Mains power quality should be that of a typical commercial or hospital environment. If you require continued operation during power mains interruptions, it is recommended that our product be powered from an uninterruptible power supply or a battery.
Power frequency (50/60 HZ) magnetic field IEC 61000-4-8	30 A/m	30 A/m	Power frequency magnetic fields should be at levels characteristic of a typical location in a typical commercial or hospital environment.
NOTE: U_T is the A.C. mains voltage prior to application of the test level.			

TABLE 3

GUIDANCE AND MINDRAY ANIMAL MEDICAL DECLARATION—ELECTROMAGNETIC IMMUNITY			
The system is intended for use in the electromagnetic environment specified below. The customer or the user of system should assure that it is used in such an environment.			
IMMUNITY TEST	**IEC 60601 TEST LEVEL**	**COMPLIANCE LEVEL**	**ELECTROMAGNETIC ENVIRONMENT-GUIDANCE**
Conduced RF IEC 61000-4-6	3 Vrms 0,15 MHz – 80 MHz 6 Vrms in ISM and amateur radio bands between 0,15 MHz and 80 MHz	3 Vrms 0,15 MHz – 80 MHz 6 Vrms in ISM and amateur radio bands between 0,15 MHz and 80 MHz	Portable and mobile RF communications equipment should be used no closer to any part of system, including cables, than the recommended separation distance calculated from the equation applicable to the frequency of the transmitter. Recommended separation distance $d = 1.2 \times \sqrt{P}$ $d = 1.2 \times \sqrt{P}$ 80 MHz to 800 MHz $d = 2.3 \times \sqrt{P}$ 800 MHz to 2.7GHz Where, P is the maximum output power rating of the transmitter in watts (W) according to the transmitter manufacturer and d is the recommended separation distance in meters (m). Field strengths from fixed RF transmitters, as determined by an electromagnetic site survey, should be less than the compliance level in each frequency range. Interference may occur in the vicinity of equipment marked with the following symbol:
Radiated RF IEC 61000-4-3	10 V/m 80MHz - 2.7GHz	10 V/m 80MHz - 2.7GHz	
Proximity fields from RF wireless communications equipment IEC 61000-4-3	27 V/m 380–390 MHz	27 V/m	
	28 V/m 430–470 MHz, 800–960 MHz, 1700–1990 MHz, 2400–2570 MHz	28 V/m	
	9 V/m 704–787 MHz, 5100–5800 MHz	9 V/m	
Note 1 At 80 MHz and 800 MHz, the higher frequency range applies. **Note 2** These guidelines may not apply in all situations. Electromagnetic propagation is affected by absorption and reflection from structures, objects and people.			
a Field strengths from fixed transmitters, such as base stations for radio (cellular /cordless) telephones and land mobile radios, amateur radio, AM and FM radio broadcast and TV broadcast cannot be predicted theoretically with accuracy. To assess the electromagnetic environment due to fixed RF transmitters, an electromagnetic site survey should be considered. If the measured field strength in the location in which system is used exceeds the applicable RF compliance level above, system should be observed to verify normal operation. If abnormal performance is observed, additional measures may be necessary, such as reorienting or relocating the system. **b** Over the frequency range 150kHz to 80MHz, field strengths should be less than 3V/m.			

TABLE 4

RECOMMENDED SEPARATION DISTANCES BETWEEN PORTABLE AND MOBILE RF COMMUNICATION DEVICE AND THE SYSTEM			
The system is intended for use in an electromagnetic environment in which radiated RF disturbance are controlled. The customer or the user of system can help prevent electromagnetic interference by maintaining a minimum distance between portable and mobile RF communication equipment (transmitters) and system as recommended below, according to the maximum output power of the communication equipment.			
Rated Maximum Output power of Transmitter (W)	**Separation Distance According to Frequency of Transmitter (m)**		
	150kHz -80MHz $d=1.2\sqrt{P}$	80MHz-800MHz $d=1.2\sqrt{P}$	800MHz-2.7GHz $d=2.3\sqrt{P}$
0.01	0.12	0.12	0.23
0.1	0.38	0.38	0.73
1	1.2	1.2	2.3
10	3.8	3.8	7.3
100	12	12	23
For transmitters at a maximum output power not listed above, the recommended separation distanced in meters (m) can be determined using the equation applicable to the frequency of the transmitter, where P is the maximum output power rating of the transmitter in watts (W) according to the transmitter manufacturer. If system image distortion occurs, it may be necessary to position system further from sources of conducted RF noise or to install external power source filter to minimize RF noise to an acceptable level. Note 1 At 80 MHz and 800 MHz, the separation distance for the higher frequency range applies. Note 2 These guidelines may not apply in all situations. Electromagnetic propagation is affected by absorption and reflection from structures, objects and people.			

Cable sample

No.	Name	Cable length (m)	Shield or not	Remarks
1	Power input	2.5m	Not shielded	/
2	SIP/SOP	＜3.0m	Shielded	/
3	ECG cable	4.0m	Shielded	/
4	Probe Cable	＜3.0m	Shielded	/
5	Footswitch Cable	2.9m	Shielded	/

■ Federal Communications Commission (FCC) Statement

The wireless module has been tested and found to comply with the limits for a class B digital device, pursuant to Part 15 of the FCC rules. These limits are designed to provide reasonable protection against harmful interference in a residential installation. This equipment generates, uses and can radiate radio frequency energy and, if not installed and used in accordance with the instructions, may cause harmful interference to radio communications. However, there is no

guarantee that interference will not occur in a particular installation. If this equipment does cause harmful interference to radio or television reception, which can be determined by turning the equipment off and on, the user is encouraged to try to correct the interference by one or more of the following measures:

- Reorient or relocate the receiving antenna.
- Increase the separation between the equipment and receiver.
- Connect the equipment into an outlet on a circuit different from that to which the receiver is connected.
- Consult the dealer or an experienced radio/TV technician for help.

17 System Maintenance

Routine system maintenance shall be carried out by the user. System maintenance after the warranty has expired is the full responsibility of the owner/operator.

The responsibility for maintenance and management of the product after delivery resides with the customer who has purchased the product.

If you have any questions, please contact the Mindray Animal Medical Customer Service Department or a sales representative.

⚠**WARNING:**	**Only an authorized Mindray Animal Medical service engineer can perform maintenance which is not specified in this operator's manual.** **For the sake of system performance and safety, perform periodical checks of the system.**

17.1 Daily Maintenance

You are responsible for daily maintenance.

17.1.1 Cleaning the System

⚠**WARNING:**	**Before cleaning the system, be sure to turn off the power and disconnect the power cord from the outlet. Cleaning the system while the power is "On" may result in electric shock.** **DO NOT directly spray solution onto the display, system display or hard surfaces that are under pressure or pumped. Ingress fluid leakage into the display or system can damage the display or system, causing possible electric shock or system failure.**

⚠ **CAUTION:**	**Do not spill water or other liquids into the system while cleaning. This may result in malfunction or electric shock.** **During cleaning, wear medical gloves to prevent infection.**

NOTE:	DO NOT use hydrocarbon glass cleaner or cleaner for OA (Office Automation) equipment to clean the display. These substances may cause deterioration of the display.

■ Cleaning the probe

Tools: neutral soapy water, soft dry cloth, soft brush

1. Wipe away dust attached to the surface of the probe head, connector and cable.
2. Use a soft brush to gently brush away dust from inside the probe connector.

3. Remaining stains or dust attached to the surface of the cable or connector should be wiped away using a cloth with a little soapy water and then air dried.

NOTE:	Do not use a wet cloth to clean the probe connector.

■ Cleaning the probe cable

1. Use a soft dry cloth to wipe away stains from the probe cable.
2. If the stains are difficult to remove, use a soft cloth dipped in a mild detergent and then let the cable air dry.

■ Cleaning holders

Tools: soft dry cloth, soapy water, soft brush

The surface of the power button should be cleaned with a soft dry cloth. Remaining stains should be wiped away using a cloth with clean or soapy water (NOTE: the cloth should not be made too wet, as this may cause electric shock) and the surface left to air dry.

1. Use a soft dry cloth to wipe away dust attached to the inside, outside and gaps in the probe holder or gel holder. Use a soft brush to brush away dust or stains from the small intra-cavity probe holder or its gap.
2. Remaining stains on the inside and outside of the holder should be wiped away using a cloth with a little soapy water and then air dried.

■ Cleaning the display

Tools: soft dry cloth, clean water or neutral detergent.

Clean the system in power off status; or in power on status, tap in the top-right corner of the screen and select to lock the system for 10 seconds.

Clean the display surface with a soft dry cloth. Remaining stains should be wiped away using a cloth with a little neutral detergent or clean water and then leave to air dry.

NOTE:	Do not use chemical solvents, acid or alkaline solution to clean the display. The ultrasound system has passed puncture test and leakage current test, and thus can be cleaned on power-on status.

■ Cleaning the cover

Tools: soft dry cloth, soapy water

Use a soft dry cloth to clean the system's cover. If the system is dirty, moisten the soft cloth with neutral soapy water, wipe away any stains, and dry the system in the air.

⚠**CAUTION:**	**Please clean all the system's dustproof covers periodically (once per month). Failure to do so may result in system damage. Cleaning times can be increased when the system is used in the open air or somewhere more dusty.**

NOTE:	Use a soft brush to brush away dust attached to all visible sockets or interfaces (such as probe sockets, sockets or interfaces in the IO panel and power supply panel). Do not use a cloth and water.

■ Dust-proof cover cleaning

1. Press the clip of the dust-proof cover and unfold it outwards (shown in the figure below).

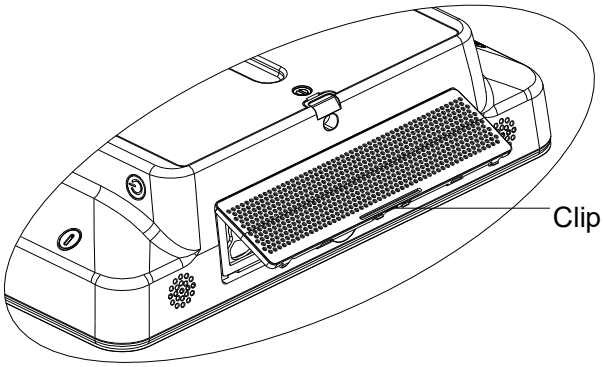

2. To remove the fixing frame of the dust-proof cover and the cover itself, press two clips on the fixing frame of the dust-proof cover towards arrow's direction (shown in the figure below).

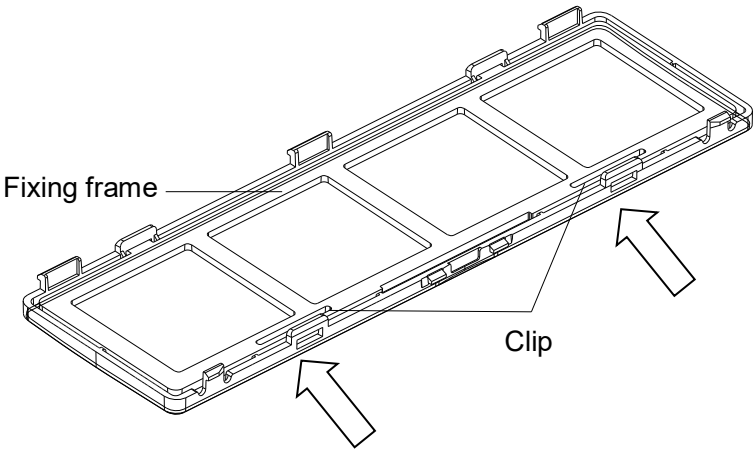

3. Clean the dust-proof mesh with water or soft brush.

⚠ **CAUTION:**	**Please clean all dust-proof covers of the system periodically (1 time per month); otherwise, system damage may result. Cleaning times can be increased when the system is used in the open air or somewhere dust is more.**

■ Cleaning the peripherals

Carry out cleaning maintenance according to your actual peripheral configuration. Items which are not configured can be skipped.

Content	Description
Color and B/W video printer	Wipe away dust or stains on the printer cover with a soft dry cloth, then clean the inside of the printer. Carry out cleaning maintenance according to the operation manual if necessary.
Graph/text printer	Wipe away dust or stains on the printer cover with a soft dry cloth, then clean the inside of the printer. Carry out cleaning maintenance according to the operation manual if necessary.

Content	Description
Foot switch	Use a soft dry cloth with a little mild soapy water to wipe away dust or stains attached to the foot switch pedals or cable.
Barcode reader	Use a soft dry cloth to wipe away dust from the glass panel of the reader, then wipe away dust or stains from the cable and bracket. See Appendix C Barcode Reader for details.

17.1.2 Disinfecting the Main Unit

⚠WARNING:

Before disinfecting the main unit, be sure to turn off the power and disconnect the power cord from the outlet. Disinfecting the main unit while the power is "On" may result in electric shock.

Use only Mindray Animal Medical approved disinfectants and methods listed in this section to disinfect the main unit. Warranty does not cover damage caused by unapproved substances or methods.

Do not mix disinfectants, as hazardous gases may result.

We make no claims regarding the efficacy of the listed chemicals or methods as a means for controlling infection. For the method to control infection, consult your hospital's infection control officer or epidemiologist.

⚠ CAUTION:

Never immerse any part of the main unit in liquids or allow liquid to enter the interior.

Any contact of disinfectants with connectors or metal parts may cause corrosion.

Do not pour or spray any liquid directly on the main unit or permit fluid to seep into connections or openings.

If you spill liquid on the main unit, disconnect the power supply, dry the main unit, and contact your service personnel.

Never use abrasive materials (such as steel wool or silver polish), or erosive cleaners (such as acetone or acetone-based cleaners).

Dilute and use the disinfectants according to the manufacturer's instructions.

Check the system after disinfection. If there is any sign of damage, remove it from use.

Follow local regulations when selecting and using the disinfectant.

Disinfectants listed in this section are used for disinfecting the housing of the main unit and the monitor only, not for disinfecting the probes or the trolley.

During cleaning, wear medical gloves to prevent infection.

■ Compatible Disinfectants

The following table lists compatible disinfectants.

Manufacturer	Trade Name	Type
Advanced Ultrasound Solutions Inc.	SONO™ ULTRASOUND WIPES	Wipe
Parker laboratories Inc	Protex™ Disinfectant Spray	Spray
PDI Inc.	Sani-Cloth® Plus germicidal disposable cloth	Wipe
Bode Chemie Gmbh	Mikrobac Tissues	Wipe
GAMA Healthcare Ltd.	Clinell universal wipes	Wipe
PDI Inc.	Sani-Cloth® AF3	Wipe
Diversey	VIREX II 256	Solution
Diversey	VIREX TB	Solution
Schulke	Schulke mikrozid® Sensitive Wipes	Wipe
Professional Disposables International Inc	Sani-Cloth® BLEACH	Wipe
Dr.Schumacher GmbH	CLEANISEPT WIPES	Wipe
Schülke	mikrozid AF wipes	Wipe
Parker Laboratories Inc.	PROTEX ULTRA	Wipe
Laboratoires ANIOS	wipe anios clean up	Wipe
/	0.5% sodium hypochlorite	Solution
/	75% alcohol	Solution

■ Disinfection Procedures

NOTE: Clean the system in power off status; or in power on status, tap in the top-right corner of the screen and select to lock the system for 10 seconds.

The ultrasound system has passed puncture test and leakage current test, and thus can be disinfected on power-on status.

After cleaning, disinfect the main unit as follows.

1. Wear medical gloves to prevent infection.
2. Disinfect the main unit with disinfectant wipe, spray or solution. Follow the disinfectant manufacturer's recommended contact time and method.

   NOTE: Do not disinfect handle, or any visible sockets or interfaces (such as probe sockets, ventilation holes, dust-proof cover, loudspeaker, sockets or interfaces in the IO panel and power supply panel). See the following figure.

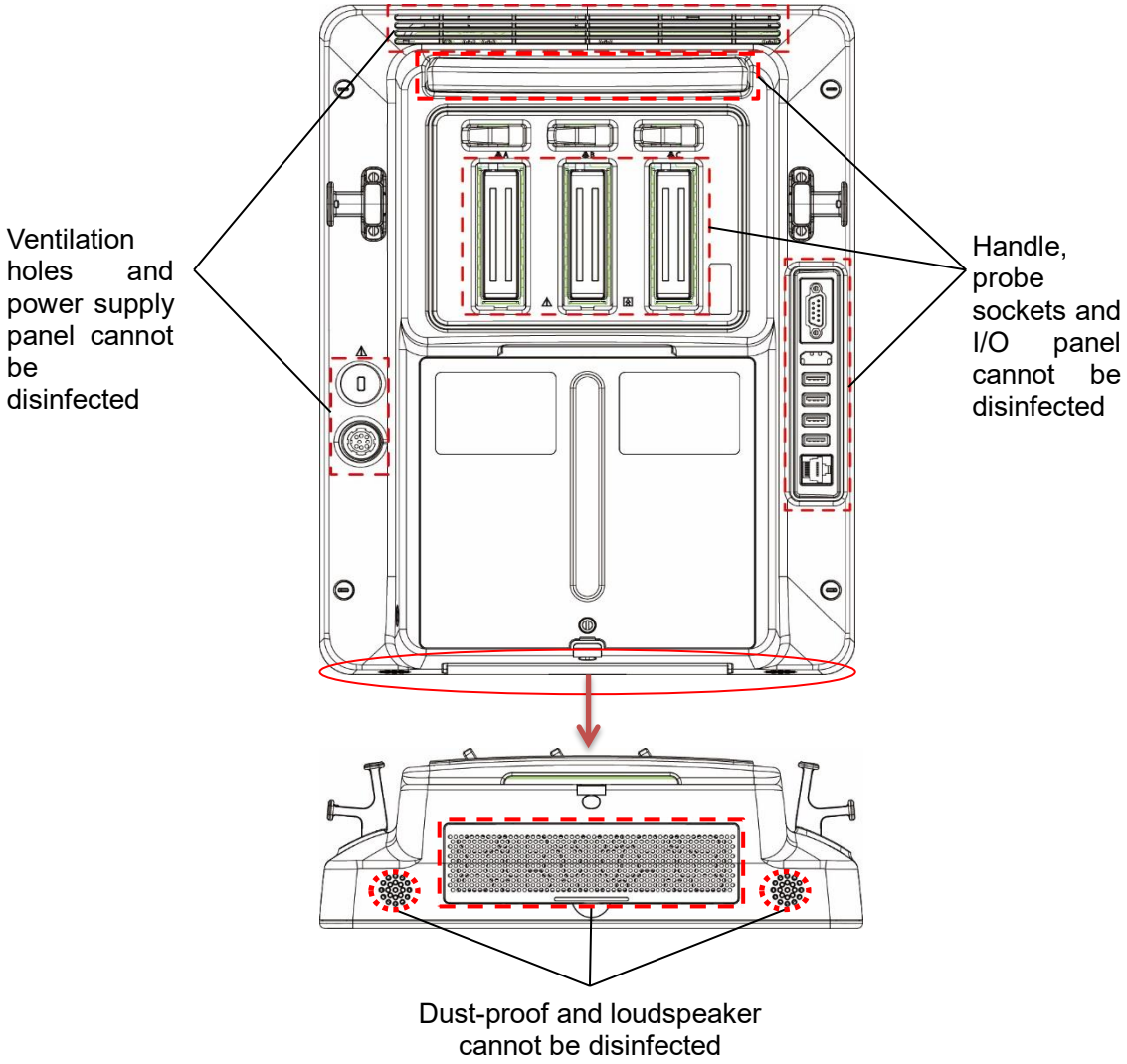

3. Remove any residue with a water-moistened soft cloth on the main unit.
4. Wipe off water on the main unit using sterile cloth or gauze. Do not dry the main unit by heating.

17.1.3 Checking the Probe

- Visually check to confirm that there are no cracks or expansion of the probe head.
- Visually check to confirm that there is no deterioration or erosion of the probe cable.
- Visually check to confirm that none of the connector pins are bent, destroyed or falling off.

17.1.4 Checking the Power Cable and Plug

- Visually check to confirm that there are no wrinkles, cracks or deterioration, and no cracks or expansion on the surface of the adapter.
- Manually check to confirm that there is no looseness or rupture. The connection of the plug is reliable.

17.1.5 Checking Appearance

Check if there are any cracks in the covers:

- Ultrasound system covers
- Probe appearance.
- External appearance of the ECG lead.

17.1.6 System Hard Drive Backup

To prevent deterioration or loss of data stored in the system hard drive (including animal info data, preset data, etc.), create a backup copy of the hard drive at regular intervals.

17.2 Troubleshooting

If any persistent system malfunction is experienced, e.g., an onscreen error message, blank imaging screen, absent menus, see the table below. If the failure cannot be resolved, contact the Mindray Animal Medical Customer Service Department or a sales representative.

Troubleshooting Table

No.	Failure	Cause	Measure
1	The system cannot be powered on.	Abnormal power system or incorrect connection of the power cord.	Check that the system is plugged in.
			Check that the plug has not become loose or dislodged from the back of the system.
2	The display has no output.	The interval between turning off and restarting the system is too short – wait at least 20 seconds.	Turn off the system and wait at least 1 minute, then restart the system.
		The display brightness or contrast may be improperly set.	Adjust the display brightness and contrast.
3	The touch screen displays the characters and menus but no images.	The acoustic power, gain or TGC controls are improperly set.	Adjust the [A.Power] control, gain or TGC control.
		Check that a probe is connected and/or fully connected.	Check probe connection.
		The system is in frozen status.	Unfreeze the image.
4	The image quality is degraded	The exam mode is incorrect.	Select an appropriate exam mode.
		The image parameter settings are incorrect.	Adjust the image parameters.

Appendix A Wireless LAN

The system provides wireless net adapter configuration, so as to assist information query and unlimited network service.

⚠ **WARNING:**	**Use the wireless LAN function prudently in OR/ICU/CCU as it may interfere with other devices.** **When the wireless LAN function is turned on, the ultrasound system may suffer interference from other equipment, even if that other equipment complies with CISPR EMISSION requirements.** **Keep at least 20 cm away from the ultrasound system when the wireless LAN function is in use.**

NOTE: For a better wireless LAN transmission effect, please take the following settings:

- SSID>80% with stable WLAN network;
- Wireless router and the server are in the same network segment;
- Router setting:
  - Wireless standard 802.11n
  - Maximum transmission speed ≥300M
  - Use AP (access point) setting;
  - Number of the devices connected to the same router ≤5.
- Target server setting:
  - Network is stable and not under overloading state (e.g. high CPU/memory usage, fast HDD speed, limited HDD space);
  - Level other than the highest level of firewall is adopted;
  - Operating system is Win8 or higher versions and supports a Gigabit Ethernet.

Disconnection may be caused if the devices connected excess the router capacity (please refer to settings of the router, generally it should be ≤5.)

DO NOT connect devices other than specified into the LAN.

Medical devices within the same LAN may interfere with each other, the operator should be cautious. (Do not connect devices that may cause strong interference. For example, life-supporting devices should not be connected in the same LAN.)

Other non-medical devices in the same frequency band may cause interference, please be cautious.

Wi-Fi function is not affected when the system is imposed with radiation interference complied with IEC60601-1-2:2014 standard.

A.1 Use the Wireless feature

1. Tap in the top-right part of the screen to open the wireless network manager.

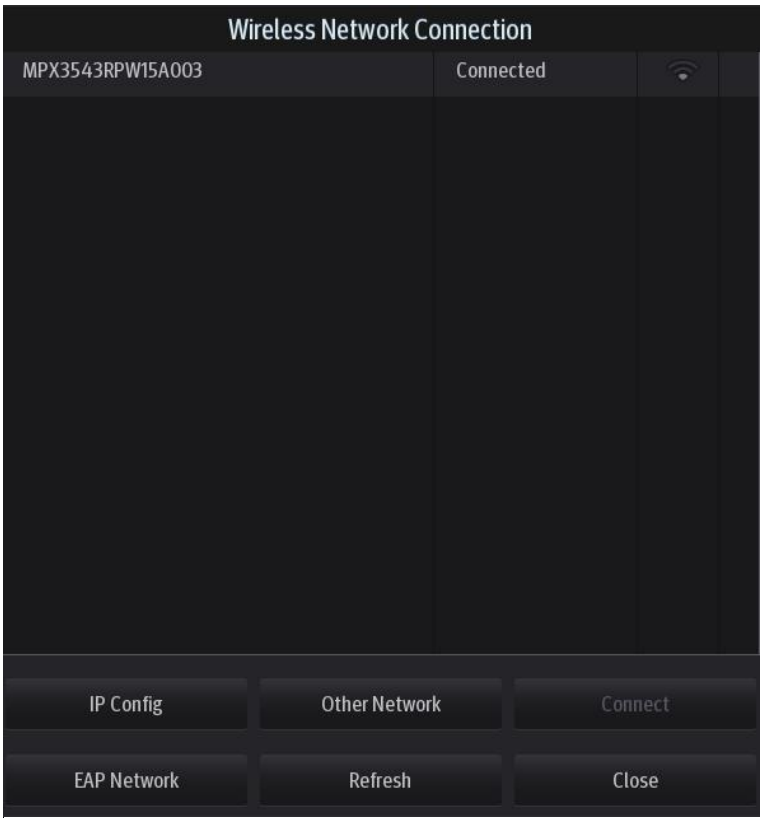

2. Tap to select the target network, tap [Connect] to connect to the network.

   When connecting an encrypted network, enter the password in the box first. You can select to hide password characters or not.

3. The system tries to connect to the selected network. The icon turns into after successful connection.
4. Tap [Refresh] to refresh the "Wireless Network Connection" list.

■ IP Configuration

NOTE:	When the system background is processing network task (DICOM sending for example), please do not enter network setting to change the IP, otherwise the background task may fail. You can check if there are tasks undergoing in the task manager.

IP configuration is used for setting local network parameters, which is also applied to DICOM connection.

1. In Wireless network manager screen, tap [IP Config] to open the page:

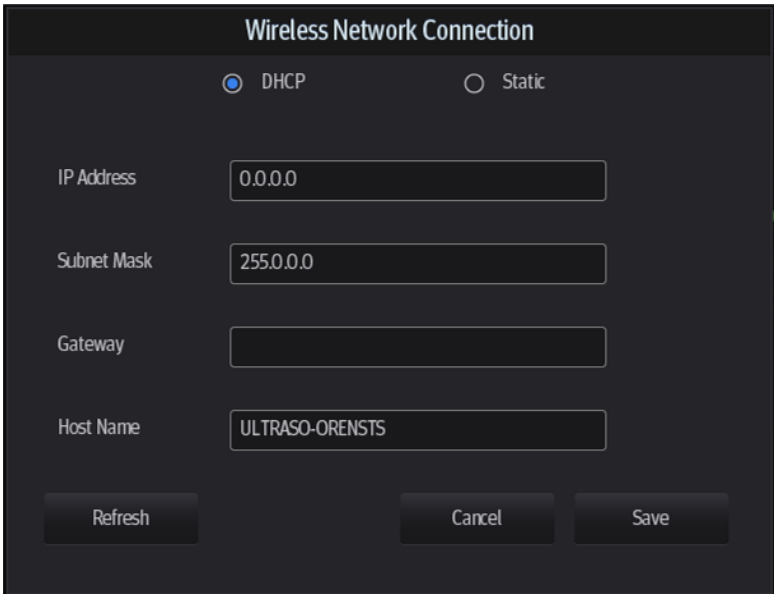

- If “DHCP” is selected, the IP address will be automatically obtained from the DNS server.
  - ➤ Tap [Refresh] to check current IP address.
- If “Static” is selected (using a static IP address), enter the IP address.
  - ➤ IP address of the system should be in the same network segment with the server.
  - ➤ Subnet Mask: set different network segment.
  - ➤ Gateway: set the gateway IP.
  - ➤ Host Name: displays the machine name of the system, if changed, the system should be restarted.

2. Tap [Save] to save current setting or tap [Cancel] to exit.

NOTE:	If the IP address displays as 0.0.0.0, this means that the network is abnormal. The reason for the failure may be disconnection or the system cannot obtain the IP address.

■ EAP Network

For setting EAP network, contact Mindray Animal Medical Customer Service Department or the sales representatives.

A.2 Specifications

■ Wireless specification and technology:

Item	Specifications
Standards	IEEE 802.11 b/g/n
Modulation mode	802.11b: DSSS 802.11g/n: OFDM
Operating frequency	2.412-2.472 GHz, 2.484 GHz
Channel spacing	5 MHz
Output power	≤17dbm
Wireless network mode	Infrastructure, ad-hoc

■ Wireless Quality of Service:

Item	Specifications
Data rate	802.11b: up to 11 Mbps @ 2.4 GHz 802.11g: up to 54 Mbps @ 2.4 GHz 802.11n: up to 300 Mbps @ 2.4 GHz and 5 GHz
Data security	WPA2-PSK encryption
Application-layer reliability	Application failure will be notified to the user immediately.
System capacity	No more than one device can be allowed to link to the ultrasound system.
System anti-interference	Can be coexistent with other Wi-Fi devices.
Network interruption alarm	Network interruption is notified by disconnection icon and failure in transmission is notified by the dialog box.
EMC test process	Wi-Fi function is not affected when the system is imposed with radiation interference complied with IEC60601-1-2:2014 standard.

A.3 Troubleshooting

Failure	Measure
Unable to connect the network.	1. Verify that network is available. 2. The SSID and password of the device should be consistent with those of the wireless AP. 3. Check for IP address conflict. If yes, set the IP address correctly. 4. Check if Mindray Animal Medical recommended wireless AP is used. If not, verify the AP effective transmission rate meets the throughput requirements of the connected devices.
The ultrasonic device is frequently off line or disconnects from the network. The transmission delay is too long.	1. Check if Mindray Animal Medical recommended wireless AP is used. If not, verify the AP effective transmission rate meets the throughput requirements of the connected devices. 2. Verify that no unauthorized devices are connected to the wireless AP.

Appendix B Battery

⚠WARNING:	**The battery is inside the machine; only technical professionals from Mindray Animal Medical or engineers authorized by Mindray Animal Medical after training can perform battery installation and uninstallation.** **If you need to change the battery or buy a new one, please contact your sales representative.**

B.1 Overview

When the system is working, the battery charges when its capacity is not full. The indicator turns off when the capacity is full.

- Under power off or standby status, charging time of the battery from capacity 0 to 100% takes less than 4 hours.
- The system lasts more than 22 hours in standby mode with full battery.

NOTE:	Power off the system if it will not be used for a long period of time (including storage/transportation condition). Do not leave the system in standby status, otherwise the batteries will be discharged and permanently damaged.

B.2 Battery specification

Voltage	14.8V
Capacity	5800mAh (single battery)

B.3 Battery Status Indicator

The battery status indicator is located in the top-right corner of the screen, indicating the battery status.

- : indicates charging status.
- : indicates discharging status.

Appendix C Barcode Reader

The product supports two kinds of readers for logging data as animal ID: 1-D barcode reader (SYMBOL LS2208) and 2-D barcode reader (SYMBOL DS4308).

The laser transmitted by SYMBOL LS2208 is Class 2 laser.

SYMBOL DS4308 is classified as “EXEMPT RISK GROUP” according to IEC 62471:2006 and EN 62471:2008.

⚠ **WARNING:**	**Class 2 laser adopts low power, visible LED. DO NOT stare into beam because of unknown hazards of transient radiation provided by class 2 laser.** **DO NOT stare into beam emitted by SYMBOL DS4308 for more than 10s.**

⚠ **CAUTION:**	**Ensure the information acquired by barcode reader is consistent with the actual information.**

NOTE: the reader does not support decoding of Multilanguage.

C.1 1-D Barcode Reader

There are 2 operation modes for 1-D barcode readers:

Hand-held mode: press the trigger to decode.

Hands-free mode: seat the reader in the stand to enter the mode, the reader decodes automatically.

C.1.1 Overview

1.	LED	Green: A barcode was successfully decoded. Red: A data transmission error or reader malfunction occurred.
2.	Scan window	Scan the barcode.
3.	Trigger	Press to decode

C.1.2 Setting Up the Reader (Take LS2208 as an example)

1. Plug the interface cable modular connector into the cable interface port on the bottom of the reader handle, and ensure the connector is properly secured.

2. Connect the other end of the interface cable to the host.

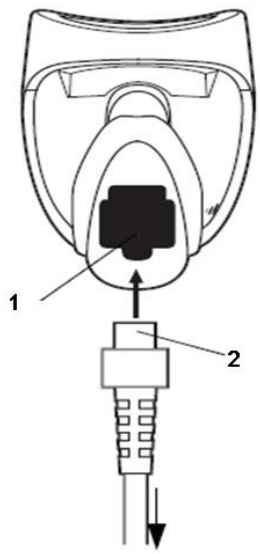	1.	Cable interface port
	2.	Interface cable modular connector

C.1.3 Setting

The reader has factory settings; please refer to A.4 for details.

The reader supports some user-defined functions as introduced below.

For more details, please contact the SYMBOL reader agents or Mindray Animal Medical Customer Service Department.

■ Volume setting:

Scan the following barcode to set the volume parameter.

Low Volume

Medium Volume

High Volume

■ code 93 and codabar scanning:

To enable or disable Code 93, scan the appropriate barcode below.

Enable Code 93

To enable Codabar, scan the appropriate barcode below.

Enable Codabar

■ code 39 full ASCII scanning:

Code 39 Full ASCII is a variant of Code 39 which pairs characters to encode the full ASCII character set. To enable or disable Code 39 Full ASCII, scan the appropriate barcode below.

Enable Code 39 Full ASCII

Disable Code 39 Full ASCII

■ I 2 of 5 symbols setting:

I 2 of 5 - One Discrete Length

Select this option to decode only I 2 of 5 symbols containing a selected length. Select the length using the numeric barcodes below. For example, to decode only I 2 of 5 symbols with 8 characters, scan **I 2 of 5 - One Discrete Length**, then scan **0** followed by **8**.

0

1

2

3

4

5

6

7

8

9

C.1.4 Scanning in Hand-Held Mode

1. Ensure all connections are secure.
2. Aim the reader at the barcode. Press the trigger.

NOTE: Ensure the scan line crosses every bar and space of the symbol, see the figure below.

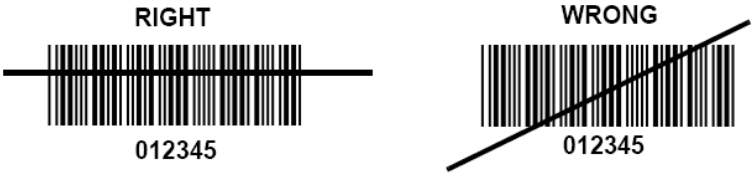

3. Upon successful decode, the reader beeps and the LED turns green.

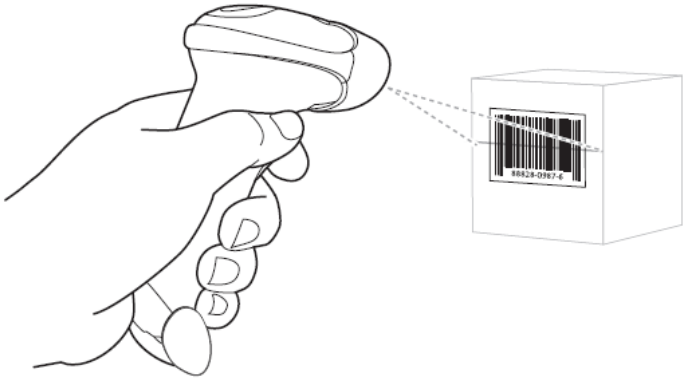

Tips: Do not hold the reader directly over the barcode. Laser light reflecting directly back into the reader from the barcode is known as specular reflection. This specular reflection can make decoding difficult. You can tilt the reader up to 55° forward or back and achieve a successful decode

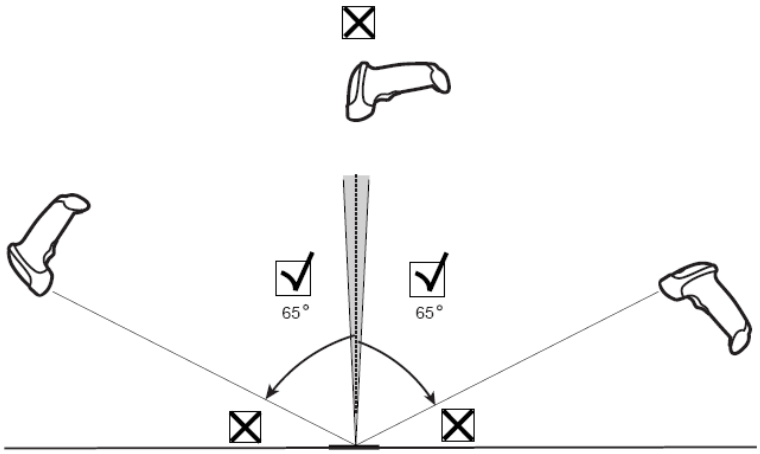

C.1.5 Scanning in Hands-Free Mode

C.1.5.1 Assembling the Intellistand

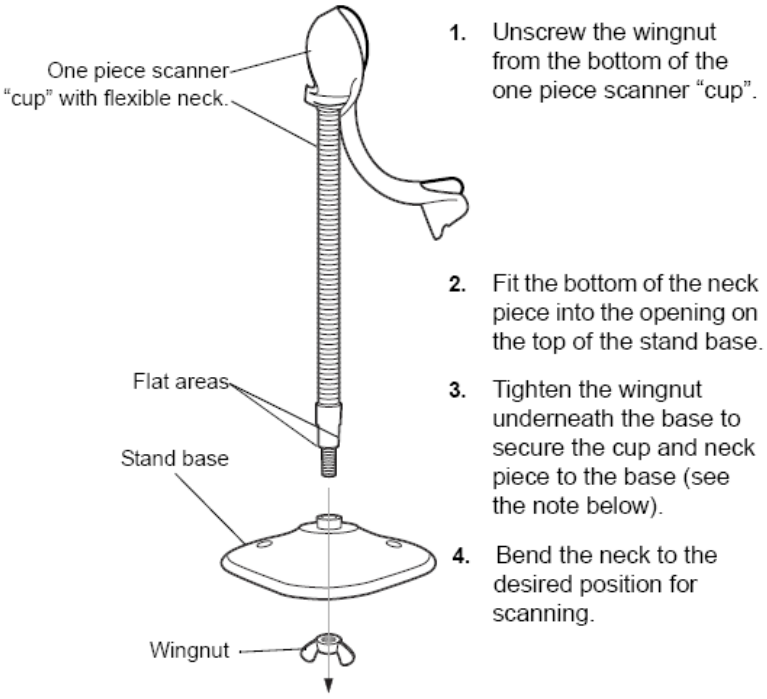

NOTE Before tightening the wingnut under the base, ensure that the flat areas on the flexible neck fit securely in the grooves in the base.

C.1.5.2 Mounting the Stand (optional)

You can attach the base of the reader's stand to a flat surface using two screws or double-sided tape (not provided).

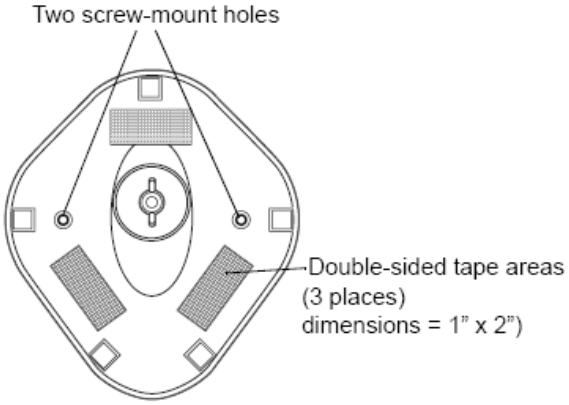

■ Screw Mount

1. Position the assembled base on a flat surface.
2. Screw one #10 wood screw into each screw-mount hole until the base of the stand is secure

■ Tape Mount

1. Peel the paper liner off one side of each piece of tape and place the sticky surface over each of the three rectangular tape holders.

2. Peel the paper liner off the exposed sides of each piece of tape and press the stand on a flat surface until it is secure.

C.1.5.3 Scanning in Hands-Free Mode

When the reader is seated in the stand's "cup", the reader's built-in sensor places the reader in hands-free mode. When you remove the reader from the stand it operates in its normal hand-held mode.

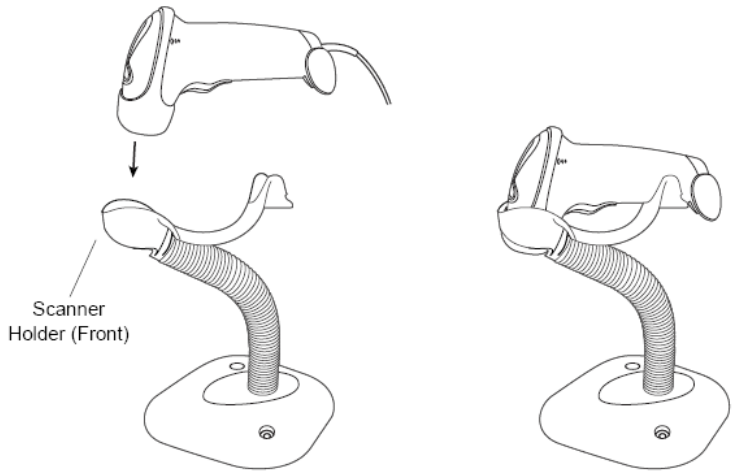

C.2 2D Barcode Reader (Take DS4308 as an example)

The 2-D barcode reader supports hand-held operation mode.

Hand-held mode: press the trigger to decode.

C.2.1 Overview

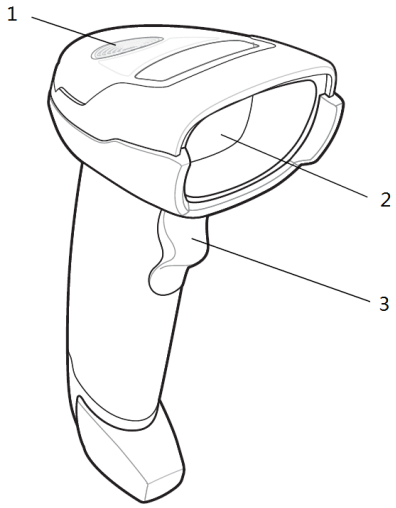

1.	LED	Green: A barcode was successfully decoded. Red: A data transmission error or reader malfunction occurred.
2.	Scan window	Scan the barcode.
3.	Trigger	Press to decode

C.2.2 Setting Up the Digital Imager Reader

C.2.2.1 Installing the Interface Cable

1. Plug the interface cable modular connector into the cable interface port on the bottom of the reader handle and ensure the connector is properly secure.
2. Connect the other end of the interface cable to the host.

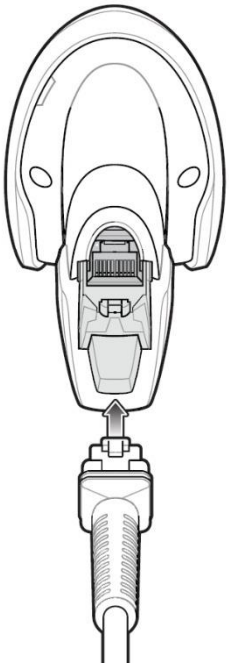

C.2.2.2 Removing the Interface Cable

1. Using the tip of a screwdriver or some other tools with a sharp head, depress the cable's modular connector clip.

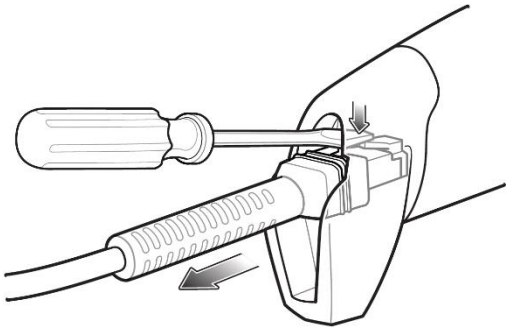

2. Carefully slide out the cable.

C.2.3 Setting

The reader has factory settings; please refer to A.4 for details.

The reader supports some user-defined functions as introduced below.

For more details, please contact the SYMBOL reader agents or Mindray Animal Medical Customer Service Department.

■ Volume setting:

Scan the following barcode to set the volume parameter.

Low Volume
(2)

Medium Volume
(1)

***High Volume**
(0)

■ code 93 and codabar setting

To enable Code 93, scan the appropriate barcode below.

***Enable Code 93**
(1)

To enable Codabar, scan the appropriate barcode below.

***Enable Codabar**
(1)

■ code 39 full ASCII setting

Code 39 Full ASCII is a variant of Code 39 which pairs characters to encode the full ASCII character set. To enable or disable Code 39 Full ASCII, scan the appropriate barcode below.

Enable Code 39 Full ASCII
(1)

***Disable Code 39 Full ASCII**
(0)

■ I 2 of 5 symbols setting

I 2 of 5 - One Discrete Length

Select this option to decode only I 2 of 5 symbols containing a selected length. Select the length using the numeric barcodes below. For example, to decode only I 2 of 5 symbols with 8 characters, scan **I 2 of 5 - One Discrete Length**, then scan **0** followed by **8**.

0

1

2

3

4

5

6

7

8

9

C.2.4 Scanning in Hand-Held Mode

1. Ensure all connections are secure (see the appropriate host chapter.)
2. Aim the digital imager reader at the barcode.

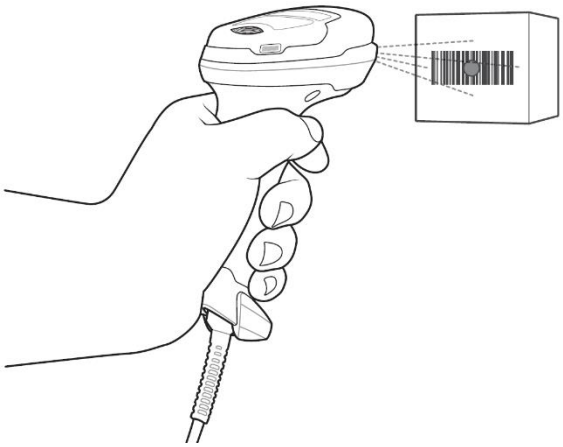

3. When the digital imager reader senses movement, in its default **Auto Aim** trigger mode, it projects a red LED dot which allows positioning the barcode within the field of view.

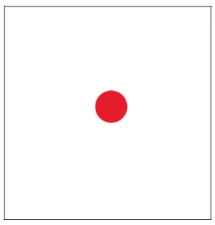

   If necessary, the digital imager reader turns on its red LEDs to illuminate the target barcode.
4. Center the symbol. Be sure the entire symbol is within the rectangular area formed by the illumination LEDs.

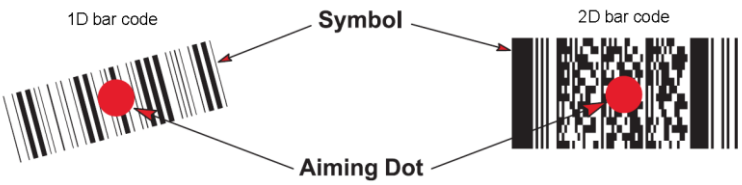

5. Hold the trigger until the digital imager reader beeps, indicating the barcode is successfully decoded.

   NOTE: Steps 2 - 4 may be required to repeat on poor quality or difficult barcodes.

   The aiming pattern is smaller when the digital imager reader is closer to the symbol and larger when it is farther from the symbol. Scan symbols with smaller bars or elements (mil size) closer to the digital imager reader, and those with larger bars or elements (mil size) farther from the digital imager reader.

   The digital imager reader can also read a barcode presented within the aiming dot not centered. The top examples in show acceptable aiming options, while the bottom examples cannot be decoded.

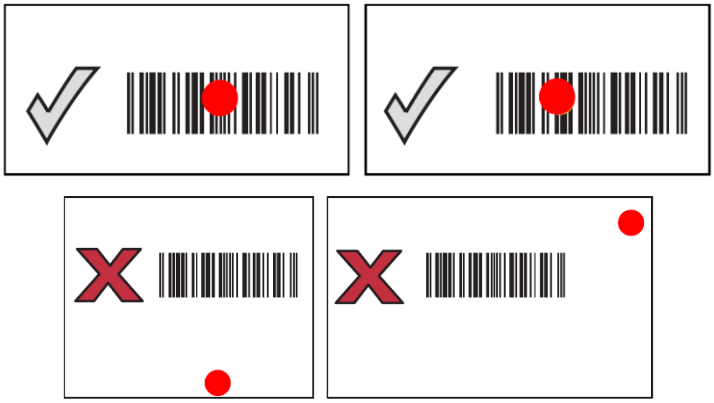

C.3 JADAK Barcode Reader

C.3.1 Supported Barcode Reader Model

The Ultrasound System supports the following barcode readers: HS-1M JDK-2413 and HS-1R JDK-2601.

C.3.2 Setting Up the JADAK Barcode Reader (Taking HS-1R as an Example)

1. Turn off the power to the Ultrasound System;
2. Connect the appropriate interface cable to the barcode reader;
3. Plug the other end of the cable into a free USB port on the Ultrasound system;
4. Once the imager has been fully connected, power on the Ultrasound System.

C.3.3 HS-1M JDK-2413 Configuration

The barcode reader is configured through scanning the barcode. Ensure that the barcode reader is properly connected to the Ultrasound System before scanning. After the barcode is successfully scanned, the barcode reader buzzes, and the green indicator is **On**.

■ **Configuration before use**

1. Scan the following 1-D barcode to configure the barcode reader:

2. Scan the following 2-D barcode to enable the suffix:

3. Scan the following 2-D barcode to set the suffix to **Enter**:

■ **Reset the barcode reader**

1. If the barcode reader is in malfunction, scan the following 1-D barcode to reset to default settings.

2. Follow the configuration steps above to reconfigure the barcode reader.

C.3.4 HS-1R JDK-2601 Configuration

The barcode reader is configured through scanning the barcode. Ensure that the barcode reader is properly connected to the Ultrasound System before scanning. After the barcode is successfully scanned, the barcode reader buzzes, and the green indicator is **On**.

■ **Configuration before use**

1. Scan the following 1-D barcode to configure the barcode reader:

2. Scan the following 1-D barcode to enable the suffix:

For scanning Barcode

For scanning RFID

Notes: Users can customize the JADAK barcode reader based on specific requirements or contact the Mindray Animal Medical service engineers. This configuration guide is applicable for the Ultrasound System only.

■ **Reset the barcode reader**

1. If the barcode reader is in malfunction, scan the following 1-D barcode to reset to default settings.

2. Follow the following steps to reconfigure the barcode reader:
   a) Scan the following 1-D barcode to configure the barcode reader:
   b) Scan the following 1-D barcode to enable the suffix:

For scanning Barcode

For scanning RFID

   c) Scan the following 1-D barcode to disable the prefix:

For scanning Barcode

For scanning RFID

C.4 Setting in Ultrasound System

Tap [Setup] to enter the Setup menu and select [Scan Code] to see the following screen.

■ 1-dimension barcode reader (1D):

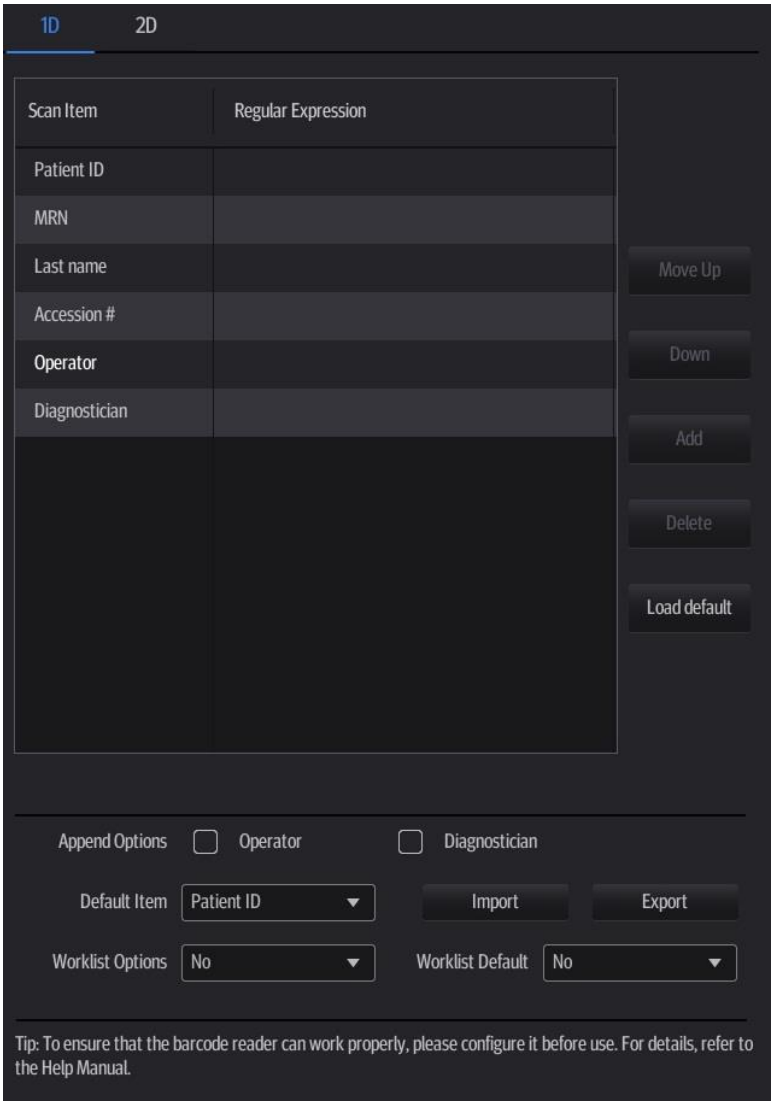

Parameter	Description
Scan Item	After scanning 1D bar code, the regular expression is matched in the priority order: “Animal ID -> Other ID -> First name -> Last name -> Middle name -> Accession# -> Operator -> Diagnostician”. If the regular expression is matched successfully, the data of 1D bar code will be displayed in this item in Animal page automatically. Example: The data of the bar code is 123 after scanning 1D bar code. The regular expression is matched in the priority order: “Animal ID -> Other ID -> First name -> Last name -> Middle name -> Accession# -> Operator -> Diagnostician”. If the regular expression of "Other ID" is matched successfully, “123” will be displayed in “Other ID” item in Animal page automatically.
Regular Expression	Set the regular expression according to the bar code format.

Parameter	Description
Append Options	The information of operator or diagnostician can be appended after selecting the check box. For example, after scanning a 1D barcode of an operator or diagnostician, the obtained data is A, and A will be displayed in "Operator" or "Diagnostician" item in Animal page automatically. After scanning a 1D barcode of an operator or diagnostician for a second time, the obtained data is B, and A will be appended by B in "Operator" or "Diagnostician" item in Animal page automatically.
Default Item	If the default item is set to "No", and both the 2D and 1D barcodes fail to be matched, the obtained data of the barcode is input as a string of characters. After selecting a default item from the drop down list of "Default Item", the obtained data of the scanned barcode will be displayed in the corresponding selected default item. For example, if the default item is set to "Animal ID", and both the 2D and 1D barcodes fail to be matched, the obtained data is displayed in the "Animal ID" item in Animal page automatically.
Move up/Down	Move up or Move down a selected item.
Add/Delete	Add or delete a selected item. (Only the default item can be added or deleted.)
Load default	Restore the parameter value to the default value.
Worklist Options	1. Select "Worklist server" from the drop-down list, and the system searches the Worklist server according to the scanned data. 2. Select "No" from the drop-down list, and the system creates a new exam in the Animal page according to the scanned data.
Worklist Default	1. Select a default item for searching the Worklist server. For example, users select "Animal ID" from the drop down list of "Worklist Default", and the system searches Animal ID in the Worklist server. 2. Select "No", and the system searches the Worklist server in the priority order: "Animal ID" -> "Last name" -> "Accession #". Note: the matching priority order is 2D item, 1D item, and Default Item, after the 1D/2D and default items are configured.
Import/Export	Import and export configuration files to preset the barcode. For details, please contact the Mindray Animal Medical service engineer.

■ 2-dimension barcode reader (2D):

Select "General" from “Analysis Mode” drop-down list: The scan codes consist of Animal ID, Other ID, Animal Name, Birth, etc.

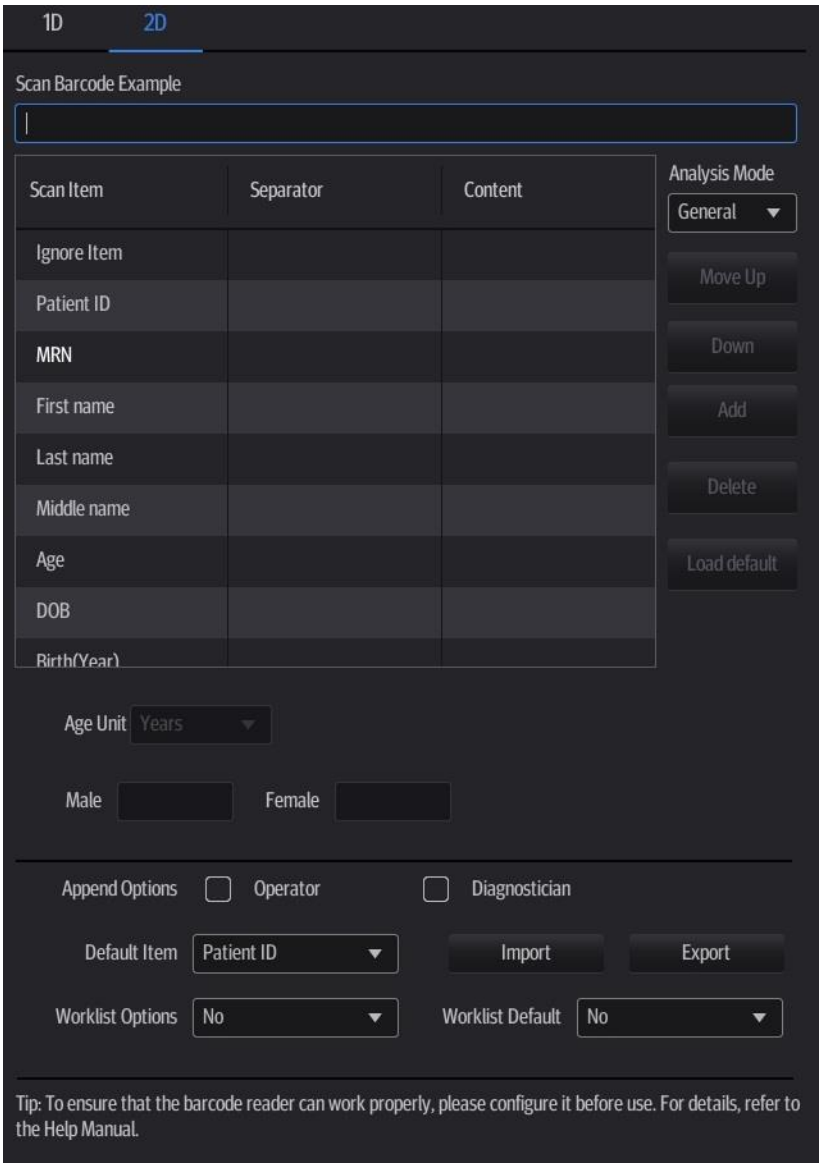

Parameter	Description
Scan Barcode Example	Input a barcode example, barcode example is separated by separators (the separator is used to set the start and end position of each item), and the barcode data is displayed in the following items in turn.
Parameters	● Input a barcode example, and you can change the information of Animal ID, Other ID, First Name, Last Name, Middle Name, Birth(Day), Birth(Month), Birth(Year), Age, Gender and etc. in the “Content” list. Note: Ignore item is used to add one line below the selected item to hide unimportant animal information ● Set the start and end position of each item via separators. After inputting a barcode example, you can select item separators from the drop-down list of the Separator. (Only separators that are input in the field box of the Scan Barcode Example can be displayed in the drop-down list of the Separator.) Note: You can customize the age unit of Birth(Day), Birth(Month), Birth(Year) in the Content column. If the DOB provided by the animal contains only digit, the system displayed an auto-generated age.
Age Unit	Select an age unit from the drop-down list of the "Age Unit": Year, Month, or Day.

Parameter	Description
Male/Female	Input the customized gender symbol besides the Male and Female field box, such as Male (M) or Female (F).
Select DOB format	Select DOB format: YYYY/MM/DD, MM/DD/YYYY, DD/MM/YYYY.

Select "Advanced" from “Analysis Mode” drop-down list: user enters scan barcode example and regular expression and tap [Match], the system will match scan barcode example with regular expression automatically, and if which is matched successfully, the scan item will display the barcode by separators.

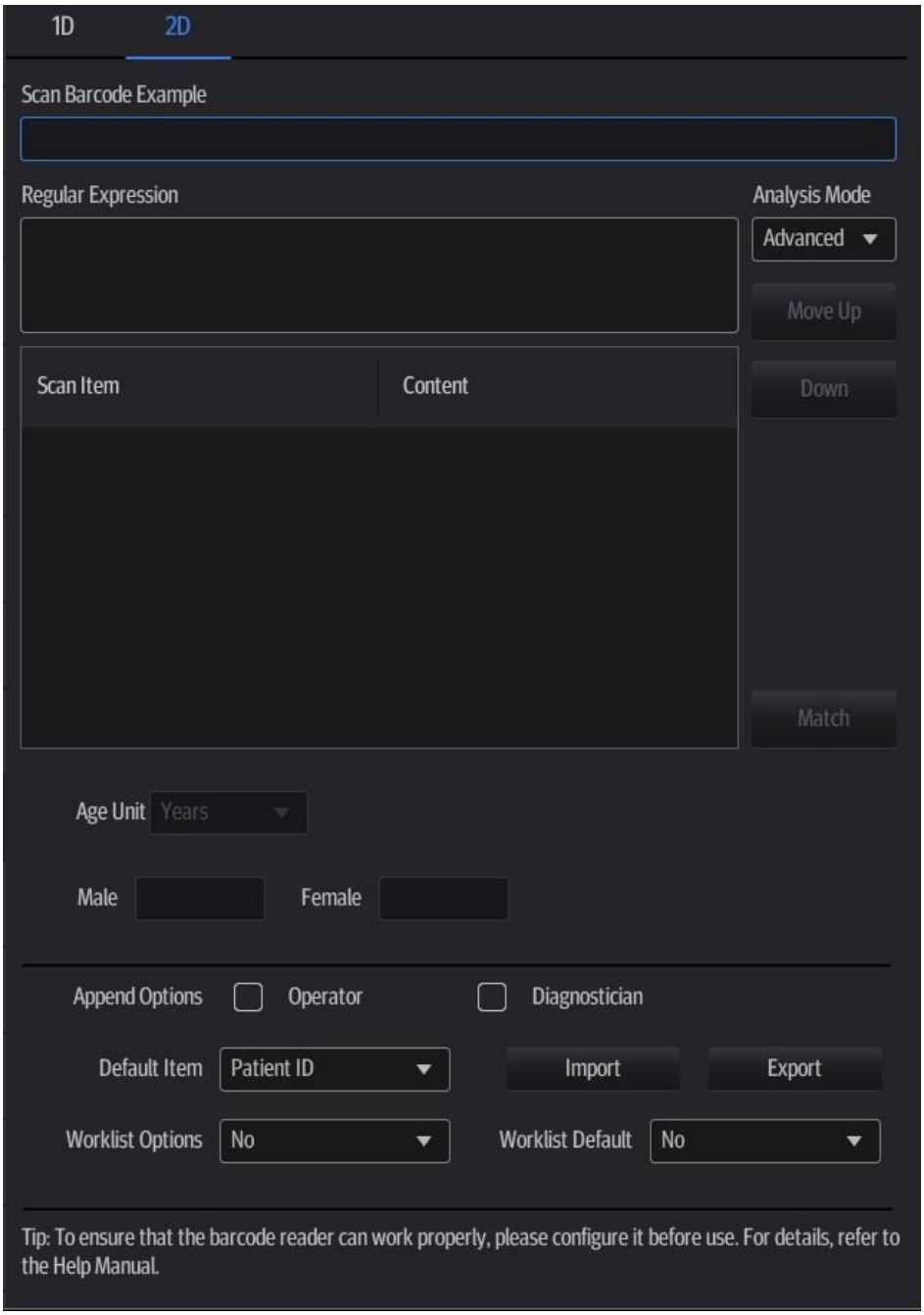

C.5 Parameter Defaults

Refer to the following table for parameter defaults of LS2208 and DS4308.

Parameter	Defaults
1-D Symbologies	
UPC/EAN	
UPC-A	Enable
UPC-E	Enable
UPC-E1	Disable
EAN-8/JAN 8	Enable
EAN-13/JAN 13	Enable
Bookland EAN	Disable
Decode UPC/EAN/JAN Supplementals (2and 5 digits)	Ignore
UPC/EAN/JAN Supplemental Redundancy	10
Transmit UPC-A Check Digit	Enable
Transmit UPC-E Check Digit	Enable
Transmit UPC-E1 Check Digit	Enable
UPC-A Preamble	System Character
UPC-E Preamble	System Character
UPC-E1 Preamble	System Character
Convert UPC-E to A	Disable
Convert UPC-E1 to A	Disable
EAN-8/JAN-8 Extend	Disable
UCC Coupon Extended Code	Disable
Code 128	
Code 128	Enable
UCC/EAN-128	Enable
ISBT 128	Enable
Code 39	
Code 39	Enable
Trioptic Code 39	Disable
Convert Code 39 to Code 32 (Italian Pharmacy Code)	Disable
Code 32 Prefix	Disable
Set Length(s) for Code 39	2 to 55
Code 39 Check Digit Verification	Disable
Transmit Code 39 Check Digit	Disable
Code 39 Full ASCII Conversion	Disable
Buffer Code 39	Disable
Code 93	
Code 93	Enable
Set Length(s) for Code 93	4 to 55
Interleaved 2 of 5 (ITF)	
Interleaved 2 of 5 (ITF) Enable	Enable
Set Lengths for I 2 of 5	14
I 2 of 5 Check Digit Verification	Disable
Transmit I 2 of 5 Check Digit	Disable
Convert I 2 of 5 to EAN 13	Disable
Codabar (NW - 7)	
Codabar	Enable
Set Lengths for Codabar	5 to 55
CLSI Editing	Disable
NOTIS Editing	Disable
2-D Symbologies	
PDF417	Enable
MicroPDF417	Disable
Code 128 Emulation	Disable
Data Matrix	Enable
Maxicode	Enable
QR Code	Enable

C.6 Maintenance

Cleaning the exit window is the only maintenance required. A dirty window can affect scanning accuracy.

- Do not allow any abrasive material to touch the window.
- Remove any dirt particles with a damp cloth.
- Wipe the window using a tissue moistened with ammonia/water.
- Do not spray water or other cleaning liquids directly into the window.

Appendix D Trolley and Accessories

⚠ **WARNING:**	**DO NOT connect the trolley to the outlets with the same circuit breakers and fuses that control the current to devices such as life-support systems. If the trolley or the system malfunctions and generates over-current, or when there is an instantaneous current at power ON, the circuit breakers and fuses of the building's supply circuit may be tripped.**

⚠ **CAUTION:**	**When moving the trolley with mounted system, please take care of the connector of the power adapter in case of damage.** **Maximum output power of the outlet in the trolley is 240VA.**

NOTE: Use a power cable no less than 1.5m and no longer than 1.8 m for the printer on the trolley.

D.1 Trolley (UMT-400/UMT-400Plus)

D.1.1 Trolley Accessories

- Gel holder
- Storage bin
- Black/white video printer tray
- Power cables
- Towelette holster

D.1.2 Introduction of Each Unit (taking UMT-400 as an example)

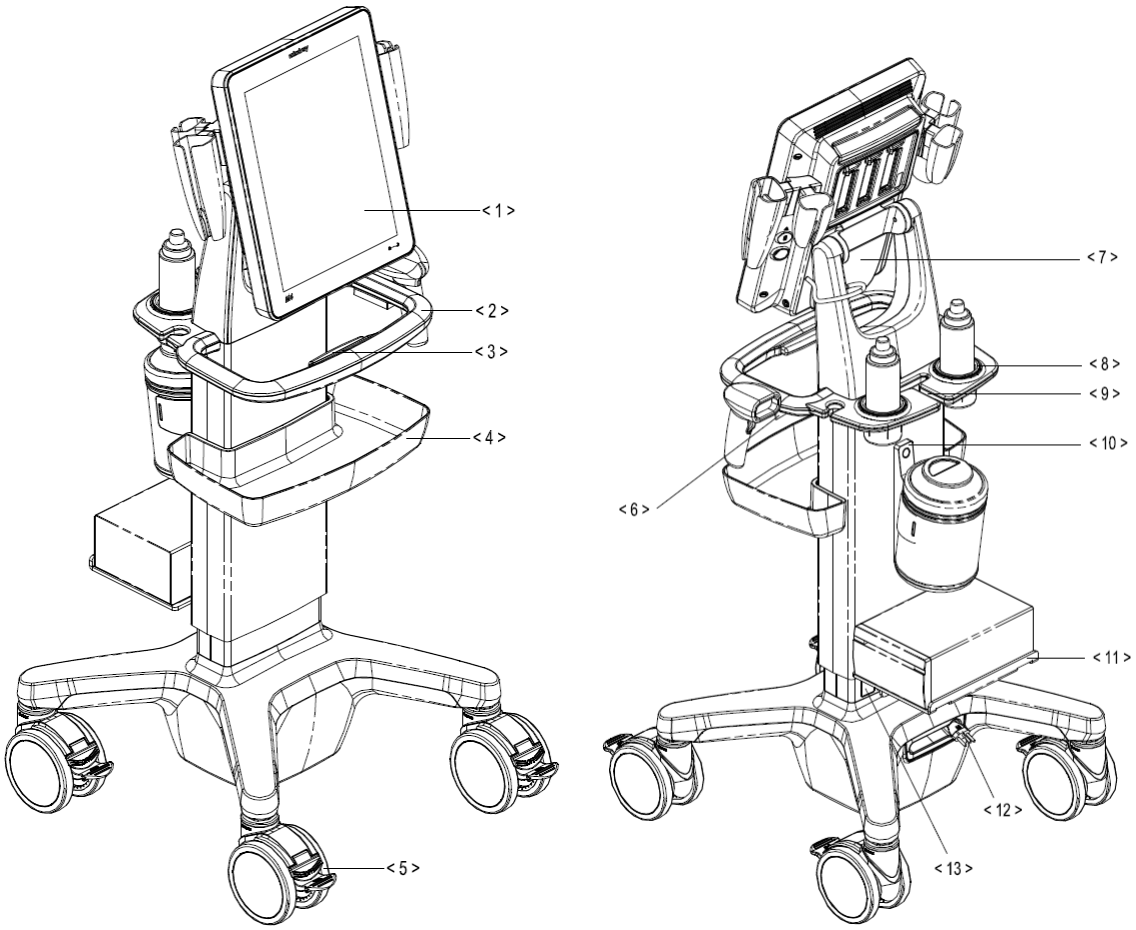

No.	Name	Function
<1>	Main unit of ultrasound system	/
<2>	Trolley handle	Used for ascending/descending the trolley or moving the trolley.
<3>	Height lever	Press to adjust the height of the stand.
<4>	Storage bin	Used for keeping the cases, towelette, etc.
<5>	Caster	Used for securing or moving the system.
<6>	Reader support	Used for placing the barcode reader.
<7>	Main unit support	Used for fixing the ultrasound system.
<8>	Gel holder	Used for placing the gel.
<9>	Cable management slot	Used for organizing the probe cables and peripheral cables.
<10>	Towelette holster	Used for placing the towelette container.
<11>	Printer bracket	Used for placing the printer.

No.	Name	Function
<12>	Retractable cable	AC power supply cable. ⚠ **CAUTION:** **DO NOT insert fingers into the gap next to the plug in case of injury.**
<13>	Power outlet	Supplies the power for peripheral devices.

Retractable cable and telescoping mechanism of the trolley are options before factory. For details, please contact Mindray Animal Medical service engineer.

D.1.3 Install Towelette Container

1. Thread the velcro tape through the holes of the towelette holster. Fasten the tape properly.

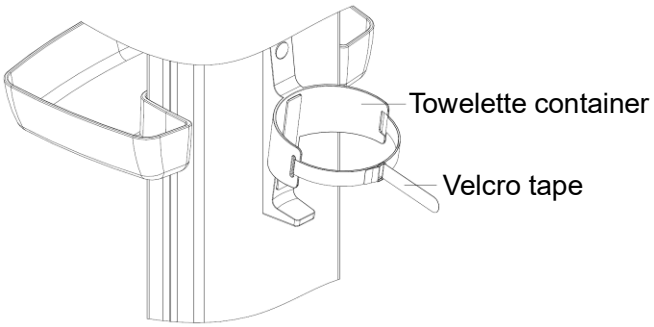

2. Put the container into the holster, and fasten the velcro tape of the towelette container.

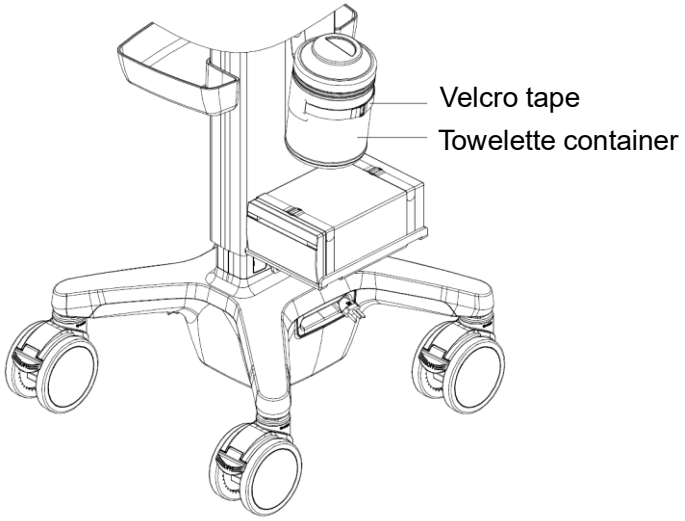

D.2 Table Stand

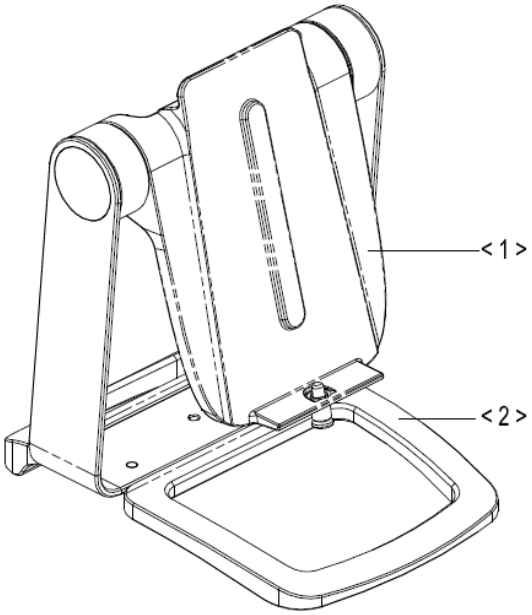

No.	Name	Function
<1>	Main unit support	Used for fixing the ultrasound system.
<2>	Base	Used for fixing the main unit support.

D.3 Wall Mount

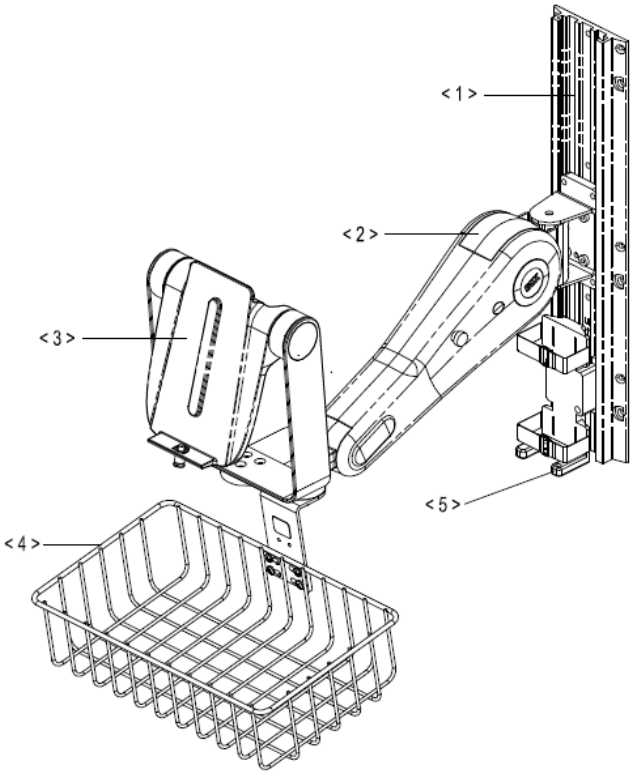

No.	Name	Function
<1>	Guide way of wall mount	Used for fixing the wall mount.
<2>	Support arm of wall mount	Used for adjusting the angle of wall mount.
<3>	Main unit support	Used for fixing the ultrasound system.
<4>	Storage tray	Used for holding tissue, etc.
<5>	Adapter holder	Used for fixing the external adapter.

Appendix E Electrical Safety Inspection

The following electrical safety tests are recommended as part of a comprehensive preventive maintenance program. They are a proven means of detecting abnormalities that, if undetected, could prove dangerous to either the animal or the operator. Additional tests may be required according to local regulations.

All tests can be performed using commercially-available safety analyzer test equipment. These procedures assume the use of a 601PROXL International Safety Analyzer or equivalent safety analyzer. Other popular testers which comply with IEC 60601-1 and are used in Europe, such as Fluke, Metron or Gerb, may require modifications to the procedure. Follow the analyzer manufacturer's instructions.

An electrical safety inspection should be periodically performed every two years. The safety analyzer is also an excellent troubleshooting tool for detecting abnormalities in line voltage and grounding, as well as total current loads.

E.1 Power Cord Plug

E.1.1 The Power Plug

Test Item		Acceptance Criteria
The power plug	The power plug pins	No broken or bent pins. No discolored pins.
	The plug body	No physical damage to the plug body.
	The strain relief	No physical damage to the strain relief. No plug warmth when device is in use.
	The power plug	No loose connections.
The power cord		No physical damage to the cord. No deterioration to the cord.
		For devices with detachable power cords, inspect the connection with the device.
		For devices with non-detachable power cords, inspect the strain relief at the device.

E.2 Device Enclosure and Accessories

E.2.1 Visual Inspection

Test Item	Acceptance Criteria
The enclosure and accessories	No physical damage to the enclosure and accessories.
	No physical damage to meters, switches, connectors, etc.
	No residue of fluid spillage (e.g., water, coffee, chemicals, etc.).
	No loose or missing parts (e.g., knobs, dials, terminals, etc.).

E.2.2 Contextual Inspection

Test Item	Acceptance Criteria
The enclosure and accessories	No unusual noises (e.g., rattles inside the case).
	No unusual smells (e.g., burning or smoky smells, particularly from ventilation holes).
	No taped notes that may suggest device deficiencies or operator concerns.

E.3 Device Labeling

Check that the labels provided by the manufacturer or the healthcare facility are present and legible.

- Main unit label
- Integrated warning labels

E.4 Protective Earth Resistance

1. Plug the analyzer probes into the device's protective earth terminal and the protective earth terminal of the AC power cord.
2. Test the earth resistance with a current of 25 A.
3. Verify the resistance is less than the limits.

■ LIMITS

ALL COUNTRIES R = 0.2 Ω Maximum

E.5 Earth Leakage Test

Run an Earth Leakage test on the device being tested before performing any other leakage tests.

The following outlet conditions apply when performing the Earth Leakage test.

- normal polarity (Normal Condition);
- reverse polarity (Normal Condition);
- normal polarity with open neutral (Single Fault Condition);
- reverse polarity with open neutral (Single Fault Condition).

■ LIMITS

For ES 60601-1:

- 300 μA in Normal Condition.
- 1000 μA in Single Fault Condition.

For IEC 60601-1:

- 500 μA in Normal Condition.
- 1000 μA in Single Fault Condition.

E.6 Enclosure Leakage Test

The following outlet conditions apply when performing the Enclosure Leakage test.

- normal polarity (Normal Condition);
- reverse polarity (Normal Condition);
- normal polarity with open neutral (Single Fault Condition);
- reverse polarity with open neutral (Single Fault Condition);
- normal polarity with open earth (Single Fault Condition);
- reverse polarity with open earth (Single Fault Condition).

■ LIMITS

For ES 60601-1:

- 100μA in Normal Condition.
- 300 μA in Single Fault Condition.

For IEC 60601-1:

- 100μA in Normal Condition.
- 500 μA in Single Fault Condition.

E.7 Animal Leakage Current

Animal leakage currents are measured between a selected applied part and mains earth. All measurements have a true RMS only.

The following outlet conditions apply when performing the Animal Leakage Current test.

- normal polarity (Normal Condition);
- reverse polarity (Normal Condition);
- normal polarity with open neutral (Single Fault Condition);
- reverse polarity with open neutral (Single Fault Condition).
- normal polarity with open earth (Single Fault Condition);
- reverse polarity with open earth (Single Fault Condition).

■ LIMITS

For BF applied parts:

- 100µA in Normal Condition.
- 500µA in Single Fault Condition.

E.8 Mains on Applied Part Leakage

The Mains on Applied Part test applies a test voltage, which is 110% of the mains voltage using a limiting resistance, to selected applied part terminals. Current measurements are then taken between the selected applied part and earth. Measurements are taken with the test voltage (110% of mains) on applied parts in the normal and reverse polarity conditions.

The following outlet conditions apply when performing the Mains on Applied Part test.

- Normal Polarity;
- Reversed Polarity.

■ LIMITS

- For BF applied parts: 5000 µA.

E.9 Animal Auxiliary Current

Animal Auxiliary currents are measured between any selected Applied Part connector and the remaining Applied Part connectors. All measurements may have a true RMS response.

The following outlet conditions apply when performing the Animal Auxiliary Current test.

- normal polarity (Normal Condition);
- reverse polarity (Normal Condition);
- normal polarity with open neutral (Single Fault Condition);
- reverse polarity with open neutral (Single Fault Condition);
- normal polarity with open earth (Single Fault Condition);
- reverse polarity with open earth (Single Fault Condition).

■ LIMITS

For BF applied parts,

- 100µA in Normal Condition.
- 500µA in Single Fault Condition.

NOTE:	Make sure the safety analyzer is authorized and complies with the requirements of IEC60601-1. Follow the analyzer manufacturer's instructions.

Appendix F iScanHelper

By providing the referential information, such as, the ultrasonic image, the anatomic graphic, scanning pictures/other scanning tips or diagnosis comments, the system helps the doctors to operate the scanning by iScanHelper. Furthermore, it is a good platform for the self-learning and training of ultrasound scanning technique for doctors. The system also plays a role in the assistant software system in fulfilling training and education.

NOTE:	THIS “iScanHelper” IS FOR REFERENCE OR TUTORIAL PURPOSES ONLY, AND THE MANUFACTURER WILL NOT BE LIABLE FOR DAMAGES AND/OR OTHER UNDESIRABLE CONSEQUENCE IN ANY KIND THAT MAY OCCUR TO THE ANIMAL OR THE USERS BY USING THE SOFTWARE.

F.1 Use iScanHelper for Reference

1. Perform ordinary scanning procedure.
2. Tap in the top-right corner of the screen and select to enter iScanHelper status.
3. Select the target view name in the menu and tap to see the details.
4. Swipe the menu to select the view.
5. Perform scanning according to information displayed on the help information area.

   You can zoom in a single window in the help information area to see the window more clearly. For details, please refer to “F.3.3 Single/quad-window Display”.
6. Tap [Exit] or on the operating panel to exit.

F.2 Use iScanHelper for Learning or Training

1. Switch to the exam modes that support iScanHelper.
2. Tap in the top-right corner of the screen and select to enter iScanHelper status.
3. Learn and practise views by system defaulted sequence according to the information displayed on help information area; or select unfamiliar views to practise.

   You can zoom in a single window in the help information area to see the information. For details, please refer to “F.3.3 Single/quad-window Display”.
4. Tap [Exit] or on the operating panel to exit iScanHelper.

F.3 iScanhelper Menu

iScanHelper information area is displayed on the menu.

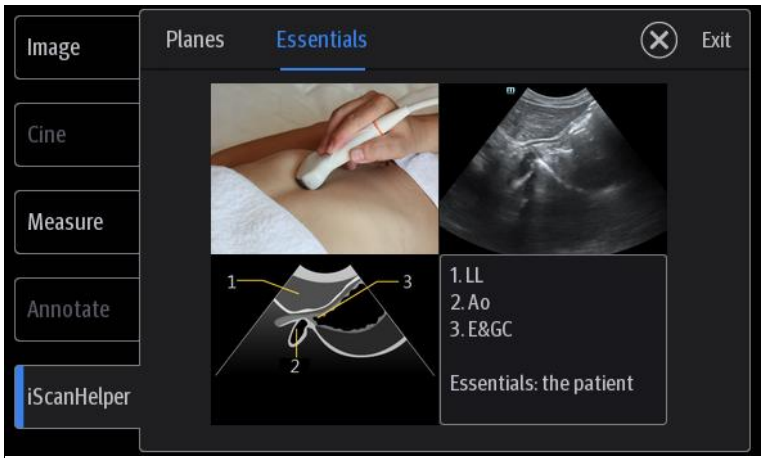

F.3.1 View Selecting Area

Swipe the menu to select target view.

F.3.2 Help Information Area

Ultrasonic image, anatomic graphic, scanning picture and scanning tips are provided in the “Essentials” menu.

- Ultrasonic image
  It is used to compare with images scanned by the operator.
- Anatomic graphic
  Related anatomical tissue information are provided here.
- Scanning picture
  Ordinary scanning tips can be observed here, including posture, probe mark, probe swing/sweep techniques.
- Scanning tips
  You can read tissue related anatomical information and adjacent tissue information here.

F.3.3 Single/quad-window Display

You can zoom in the anatomic graphic, ultrasonic image as well as scanning picture to view those information more conveniently.

Tap on the anatomic graphic, the ultrasonic image or scanning tips to go to the single window of each of them. Tap again to return to quad-window display.

F.4 Measurement

Measurement is available under iScanHelper status. For details, please refer to [Advanced Volume].

Appendix G iWorks (Auto Workflow Protocol)

G.1 Overview

The main objective of ultrasound workflow automation (iWorks) is to speed up exam times and reduce the excessive number of user interface manual key strokes that can lead to repetitive strain injuries over time. It automates a clinical workflow in common exam protocols in a logical “step by step” manner. It also prevents missing important parts of examinations as well as decreasing exam times.

A Protocol Event contains series workflow events (annotation comments, body marks and measurements.

The system provides different protocol events based on the different application regions.

iWorks is an option.

G.2 Normal iWorks Basic Procedure

1. Enter the animal information.
2. Tap [iWorks] on the tool bar to enter the protocol selection screen, and tap the corresponding protocol button to enter the status.
3. After the system enters the iWorks screen, the available protocol is displayed on the lower part of the screen. Perform the scanning and saving according to the screen prompt.

   Perform measurements or add comments/body marks to the image according to the screen prompt.
4. After a view scanning is complete, tap [Save Image] to switch to the next view according to the screen prompt.
5. Repeat step 3 and step 4 to acquire all the necessary images.
6. After all views are finished, the system will prompt you to exit iWorks. Tap [Yes] to exit.

G.3 Screen Display

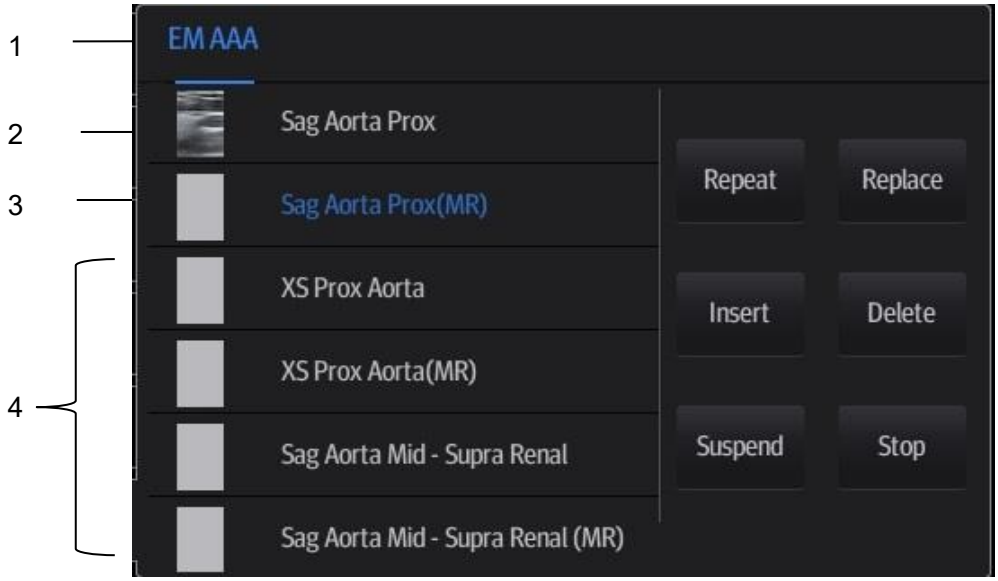

Name	NOTE
1	Displays the protocol name.
2	Already finished view.
3	Current view type, highlighted in blue.
4	Views contained of the current type.

G.4 View Operation

In iWorks status, you can perform view selection, repeat, replacement and delete operations using the touch screen.

For some views, the system switches to the relevant imaging modes if necessary.

The comment for the current view has been automatically added to the bottom-left corner of the image, ready for you to scan the specified anatomy.

G.4.1 View Selection

Tap view name to select the view to be scanned. The name of the current view is in blue.

G.4.2 View Operation

In the current active view, you can perform image scanning, measurements, and adding comments and body marks, etc. Operations are the same as those for manual operation. See the relevant chapters for details.

Tips: If the selected view is configured with measurement items, you can tap [Freeze] and then tap [Update] to start measurement.

G.4.3 Repeat View

If necessary, tap [Repeat] to insert another template of the current view. You can then perform an extra examination.

G.4.4 View Replacement

The previous image will be deleted and replaced by the new image.

G.4.5 Delete View

Tap the view name to select the view to be deleted. Tap [Delete] to delete the selected view.

G.5 Manual Examination

The user can run the system manually. This is used when an unusual or atypical workflow is required.

You can run the system manually if necessary.

- Start manual examination: tap [Suspend] to pause the current iWorks protocol. The system enters manual examination status.
- Return to iWorks: tap [iWorks] to return to automated status. You can continue the previous iWorks scan.

G.6 Insert

Insert is a specialized protocol event within iWorks. It assists with the workflow for documenting and measuring common pathological (disease) states (i.e. Mass, Cyst, Stenosis, Thrombus) that occurs outside a routine, normal examination.

1. Tap [Insert] to enter the status.
2. Select the necessary protocol and the system adds the protocol events to the current protocol.
3. Perform measurements or add comments/body marks to the image if necessary.

G.7 iWorks Settings

Enter the iWorks preset screen using the path: “[Setup] → [Presets] → [iWorks].” Here you can customize the protocols and views:

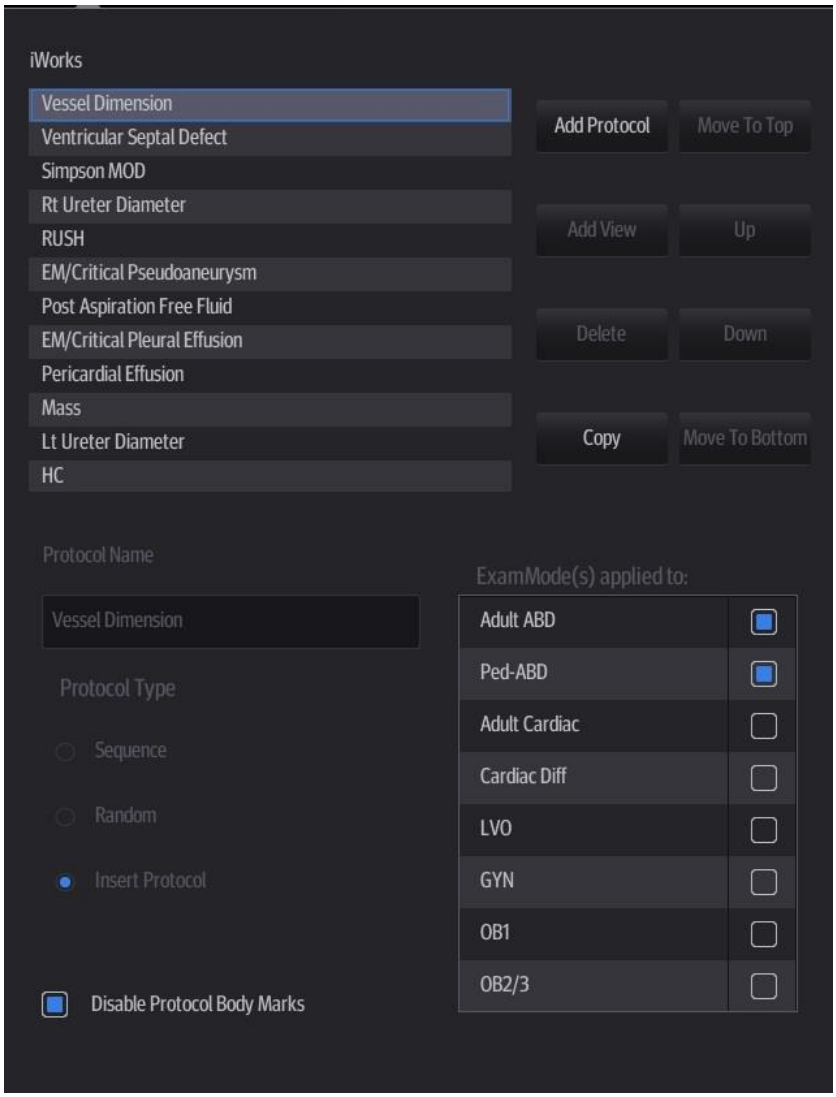

G.7.1 Protocol Management

- Tap to select the protocol in the list. The protocol type can be checked on the lower part. Check to select applied exam modes in the “Exam Mode(s) applied to” column.
- Tap [Add Protocol] to create a new protocol. It can be customized.
- Tap to select a protocol in the iWorks list and tap [Copy]. A protocol named “XXX_Copy1” is created with the copied views, which can be customized.
- Tap [Delete] to delete a user-defined protocol.
- Tap [Up] or [Down] to move the selected protocol.
- Tap [Move to Top]/[Move to Bottom] to move the selected protocol to the top or bottom of the list.

G.7.2 View Management

- Tap to select the views in the list. The image, annotation, body mark and measurement settings can be checked on the right.
- Tap to select a user-defined protocol in the list. Tap [Add View] to add a view template to the protocol.

G.7.3 Create New Protocol

You can create user-defined protocols and customize the automated procedure.

1. In the iWorks preset screen, tap [Add Protocol] to create a new protocol. Enter the protocol name, type and select the application region.

   Or, select an existing protocol and tap [Copy] to customize the protocol based on the previous template.
2. Tap [Add View] to enter the view name and perform image settings.

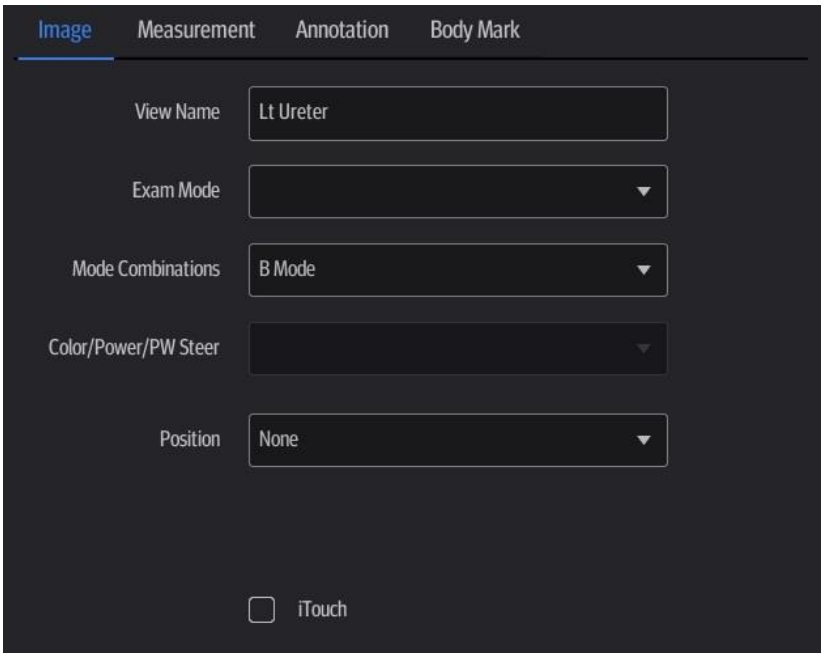

3. Add comments, body marks and perform measurement settings.

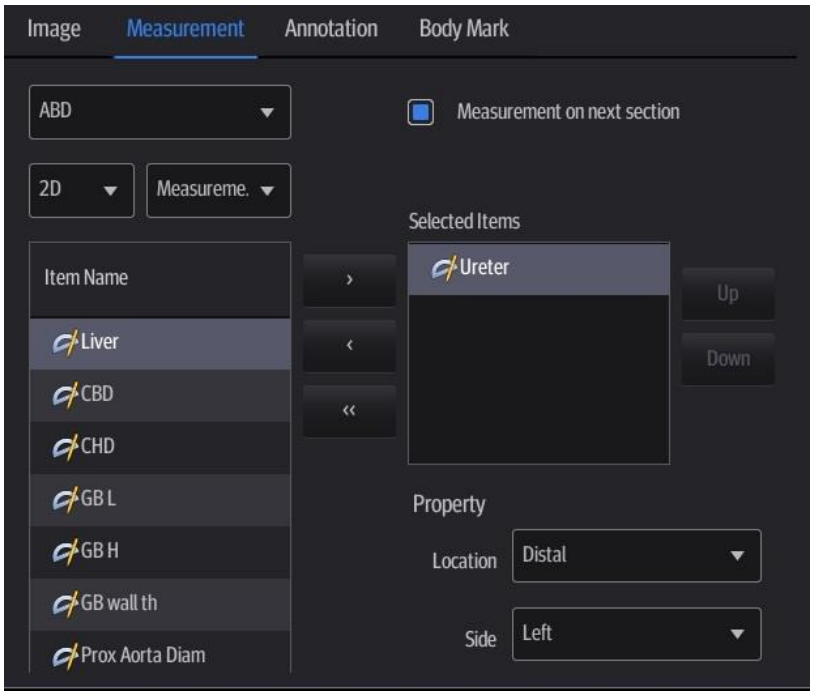

In the measurement setting, if “Measurement on next section” is selected, the system will save two section images after finishing the section operation. One of the two sections will include the measurement result.

4. Select the checkbox for body mark display settings.
5. Tap [Save] to complete the setting and exit.

Appendix H List of Vocal Commands

The ultrasound system can automatically recognize some vocal commands. You can use a microphone device to input the vocal commands as shown in the following figure. For details about inputting the vocal commands, please refer to "3.11.3 iVocal". After the input command is recognized, the system automatically performs the corresponding operations.

Vocal command	Operation
Hello Mindray	Turn On Audio Control
Turn Off	Turn Off Audio Control
B Mode	Back to B Mode
CDI Mode	Turn on/off CDI Mode
Power Mode	Turn on/off Power Mode
M Mode	Turn on/off M Mode
PW Mode	Turn on/off PW Mode
CW Mode	Turn on/off CW Mode
3D	Turn on/off 3D Mode
Freeze	Freeze Image
UnFreeze	UnFreeze Image
Clear	Clear
Dual	Enter Dual Windows Format
QSave	QSave
Update	Update
Full Image	Turn on/off Full Image Mode
Middle Line	Display/Hide Middle Line
iNeedle	Turn on/off iNeedle Mode
iTouch	Turn on iTouch Mode
Depth Increase	Depth Increase One
Depth Decrease	Depth Decrease One
Focus Position Up	Increase the Focus Position
Focus Position Down	Decrease the Focus Position
Gain Increase	Gain Increase One
Gain Decrease	Gain Decrease One
Gain Auto Increase	Gain Auto Increase
Gain Auto Decrease	Gain Auto Decrease
Gain Stop	Gain Stop Auto Increase/Decrease
Zoom In	Zoom In Image
Zoom Out	Zoom Out Image
Open Smart Track	Turn on Smart Track Mode
Close Smart Track	Turn off Smart Track Mode
Sound Volume Up	Turn Sound Volume Up
Sound Volume Down	Turn Sound Volume Down
Angle More	Angle More One

Vocal command	Operation
Angle Less	Angle Less One
Left Steer	Left Steer the Color ROI or Linear Image
Right Steer	Right Steer the Color ROI or Linear Image
BaseLine Down	Decrease the Baseline Position
BaseLine Up	Increase the Baseline Position
Save Image	Save Image
Save Clip	Save Clip
Save Screen	Save Screen
Nerve Block	Switch Exam Mode to Nerve Block
Deep Nerve	Switch Exam Mode to Deep Nerve
Superficial N	Switch Exam Mode to Superfical Nerve
Needle Visualized Optimization	Switch Exam Mode to Needle Visualized Optimization
Emergency Abdomen	Switch Exam Mode to Emergency Abdomen
Emergency FAST	Switch Exam Mode to Emergency Focused Assessment with Sonography for Trauma
Emergency Obstetrics	Switch Exam Mode to Emergency Obstetrics
Emergency Vascular	Switch Exam Mode to Emergency Vascular
Emergency Superficial	Switch Exam Mode to Emergency Superficial
Emergency AAA	Switch Exam Mode to Emergency Abdomen Aorta Aneurysm
Emergency Cardiac	Switch Exam Mode to Emergency Cardiac
Ocular	Switch Exam Mode to Ocular
Adult Cardiac	Switch Exam Mode to Adult Cardiac
Cardiac Difficult	Switch Exam Mode to Adult Cardiac Difficult
Pediatric Cardiac	Switch Exam Mode to Pediatric Cardiac
Lung	Switch Exam Mode to Lung
Intraoperative	Switch Exam Mode to Intraoperative
Musculoskeletal	Switch Exam Mode to Musculoskeletal
Superficial	Switch Exam Mode to Superficial
Adult Abdomen	Switch Exam Mode to Adult Abdomen
Pediatric Abdomen	Switch Exam Mode to Pediatric Abdomen
Left ventricular opacification	Switch Exam Mode to LVO
TEE Cardiac	Switch Exam Mode to TEE Cardiac
Vascular	Switch Exam Mode to Vascular
Carotid	Switch Exam Mode to Carotid
Transcranial Imaging	Switch Exam Mode to Transcranial Imaging
Urology	Switch Exam Mode to Urology
Thyroid	Switch Exam Mode to Thyroid
Breast	Switch Exam Mode to Breast
Testicle	Switch Exam Mode to Testicle
Orthopedic	Switch Exam Mode to Orthopedic
Neonatal Head	Switch Exam Mode to Neonatal Head
Neonatal Cardiac	Switch Exam Mode to Neonatal Cardiac

Vocal command	Operation
Neonatal Abdomen	Switch Exam Mode to Neonatal Abdomen
Gynecology	Switch Exam Mode to Gynecology
1st Trimester	Switch Exam Mode to 1st Trimester
2nd & 3rd Trimester	Switch Exam Mode to 2nd & 3rd Trimester
Open Patient Info Dialog	Open Animal Info Dialog
Close Patient Info Dialog	Close Animal Info Dialog
Open Probe Dialog	Open Probe Dialog
Close Probe Dialog	Close Probe Dialog
Open Review Dialog	Open Review Dialog
Close Review Dialog	Close Review Dialog
Open Report Dialog	Open Report Dialog
Close Report Dialog	Close Report Dialog
Open Preset Dialog	Open Preset Dialog
Close Preset Dialog	Close Preset Dialog

Appendix I Transducer Maximum Surface Temperature

According to the requirements of the section 201.11 in the standard IEC 60601-2-37: 2015, the transducer surface temperature has been tested in two kinds of conditions: the transducer suspended in still air or transducer contacting human-tissue mimicking material.

* The measurement data were obtained under the test conditions employed at Mindray.

Transducer model	Surface Temperature of Transducer Contacting with TMM	Surface Temperature of Transducer Suspending in Still Air
C4-1s	40.4	35.3
C5-1s	40.6	35.6
C11-3s	41.0	35.4
L12-3RCs	41.1	34.7
L12-4s	40.8	34.6
L14-5sp	41.3	34.7
L14-6Ns	41.0	35.1
L14-6s	41.3	34.6
L16-4Hs	41.2	29.7
L20-5s	40.0	32.7
P4-2s	40.8	34.2
P7-3s	40.6	34.5
P7-3Ts	41.4	28.8
P10-4s	40.8	33.8
SP5-1s	40.9	34.7

Appendix J Acoustic Output Reporting Tables (IEC 60601-2-37: 2015)

J.1 C4-1s

Transducer Model: C4-1s

Imaging Mode: M-mode

Index label		MI	TIS		TIB		TIC
			At surface	Below surface	At surface	Below surface	
Maximum index value		1.15	0.37		1.27		0.93
Index component value			0.26	0.37	0.94	1.27	
Acoustic Parameters	$p_{r,\alpha}$ at z_{MI} (MPa)	1.70					
	P (mW)		63.85		63.53		62.96
	$P_{1\times1}$ (mW)		28.38		28.24		
	z_s (cm)			3.44			
	z_b (cm)					5.44	
	z_{MI} (cm)	0.50					
	$z_{pii,\alpha}$ (cm)	0.50					
	f_{awf} (MHz)	2.20	1.90		1.89		1.90
Other Information	*prr* (Hz)	1,000.00					
	srr (Hz)	/					
	n_{pps}	/					
	$I_{pa,\alpha}$ at $z_{pii,\alpha}$ (W/cm^2)	69.38					
	$I_{spta,\alpha}$ at $z_{pii,\alpha}$ or $z_{sii,\alpha}$ (mW/cm^2)	49.80					
	I_{spta} at z_{pii} or z_{sii} (mW/cm^2)	53.73					
	p_r at z_{pii} (MPa)	1.77					
Operating control conditions	Acoustic power	100%	100%		100%		100%
	Display depth	8cm	16cm		16cm		16cm
	Focus position	2.0cm	11.0cm		11.0cm		11.0cm
	Working Frequency	Pen	Pen		Pen		Pen
	PRF	1000	1000		1000		1000

Transducer Model: C4-1s

Imaging Mode: B-mode

Index label		MI	TIS		TIB		TIC
			At surface	Below surface	At surface	Below surface	
Maximum index value		0.96	0.34		2.07		0.95
Index component value			0.34	0.34	2.07	0.34	
Acoustic Parameters	$p_{r,\alpha}$ at z_{MI} (MPa)	1.42					
	P (mW)		206.00		205.00		94.00
	$P_{1\times1}$ (mW)		42.92		42.71		
	z_s (cm)			/			
	z_b (cm)					/	
	z_{MI} (cm)	0.50					
	$z_{pii,\alpha}$ (cm)	0.50					
	f_{awf} (MHz)	2.20	1.68		1.68		1.90
Other Information	*prr* (Hz)	4,018.00					
	srr (Hz)	60.00					
	n_{pps}	1.33					
	$I_{pa,\alpha}$ at $z_{pii,\alpha}$ (W/cm^2)	69.46					
	$I_{spta,\alpha}$ at $z_{pii,\alpha}$ or $z_{sii,\alpha}$ (mW/cm^2)	9.00					
	I_{spta} at z_{pii} or z_{sii} (mW/cm^2)	9.71					
	p_r at z_{pii} (MPa)	1.47					
Operating control conditions	Acoustic power	100%	100%		100%		100%
	Display depth	16cm	16cm		16cm		16cm
	Focus position	2.0cm	11.0cm		11.0cm		11.0cm
	Working Frequency	Gen	HRes		HRes		Pen
	PRF	4018	3091		3091		4018

Transducer Model: C4-1s

Imaging Mode: B+M-mode

Index label		MI	TIS		TIB		TIC
			At surface	Below surface	At surface	Below surface	
Maximum index value		0.97	0.61		1.52		1.56
Index component value			0.51	0.61	0.50	1.52	
Acoustic Parameters	$p_{r,\alpha}$ at z_{MI} (MPa)	1.43					
	P (mW)		197.07		195.14		125.23
	$P_{1\times1}$ (mW)		56.18		55.56		
	z_s (cm)			3.56			
	z_b (cm)					5.44	
	z_{MI} (cm)	0.50					
	$z_{pii,\alpha}$ (cm)	0.50					
	f_{awf} (MHz)	2.20	1.90		1.90		1.90
Other Information	*prr* (Hz)	1,000.00					
	srr (Hz)	58.00					
	n_{pps}	/					
	$I_{pa,\alpha}$ at $z_{pii,\alpha}$ (W/cm^2)	71.10					
	$I_{spta,\alpha}$ at $z_{pii,\alpha}$ or $z_{sii,\alpha}$ (mW/cm^2)	51.05					
	I_{spta} at z_{pii} or z_{sii} (mW/cm^2)	55.08					
	p_r at z_{pii} (MPa)	1.49					
Operating control conditions	Acoustic power	100%	100%		100%		100%
	Display depth	8cm	16cm		16cm		16cm
	B/M Focus position	2.0cm	11.0cm		11.0cm		11.0cm
	B/M Working Frequency	Pen	Pen		Pen		Pen
	B PRF	4000	2000		2000		2000
	M PRF	1000	1000		1000		1000

Transducer Model: C4-1s

Imaging Mode: PW-mode

Index label		MI	TIS		TIB		TIC
			At surface	Below surface	At surface	Below surface	
Maximum index value		1.15	0.71		2.13		1.64
Index component value			0.55	0.71	1.29	2.13	
Acoustic Parameters	$p_{r,\alpha}$ at z_{MI} (MPa)	1.47					
	P (mW)		109.68		74.88		103.25
	$P_{1\times1}$ (mW)		48.75		45.38		
	z_s (cm)			3.29			
	z_b (cm)					3.38	
	z_{MI} (cm)	1.27					
	$z_{pii,\alpha}$ (cm)	1.27					
	f_{awf} (MHz)	1.62	2.35		1.61		1.61
Other Information	*prr* (Hz)	697.00					
	srr (Hz)	/					
	n_{pps}	/					
	$I_{pa,\alpha}$ at $z_{pii,\alpha}$ (W/cm^2)	78.18					
	$I_{spta,\alpha}$ at $z_{pii,\alpha}$ or $z_{sii,\alpha}$ (mW/cm^2)	125.40					
	I_{spta} at z_{pii} or z_{sii} (mW/cm^2)	144.50					
	p_r at z_{pii} (MPa)	1.58					
Operating control conditions	Acoustic power	100%	100%		100%		100%
	Display depth	8cm	16cm		8cm		16cm
	SV Position	2.0cm	6.0cm		3.0cm		4.0cm
	Working Frequency	Pen	Res		Pen		Pen
	PRF	697	5555		5555		5555
	SV	0.5mm	0.5mm		0.5mm		0.5mm

Transducer Model: C4-1s

Imaging Mode: B+PW-mode

Index label		MI	TIS		TIB		TIC
			At surface	Below surface	At surface	Below surface	
Maximum index value		1.08	0.82		1.93		2.34
Index component value			0.57	0.82	0.35	1.93	
Acoustic Parameters	$p_{r,\alpha}$ at z_{MI} (MPa)	1.51					
	P (mW)		217.58		97.48		184.69
	$P_{1\times1}$ (mW)		65.03		46.75		
	z_s (cm)			3.89			
	z_b (cm)					3.57	
	z_{MI} (cm)	0.50					
	$z_{pii,\alpha}$ (cm)	0.50					
	f_{awf} (MHz)	1.96	1.89		1.61		1.90
Other Information	*prr* (Hz)	2,789.00					
	srr (Hz)	58.00					
	n_{pps}	1.33					
	$I_{pa,\alpha}$ at $z_{pii,\alpha}$ (W/cm^2)	76.25					
	$I_{spta,\alpha}$ at $z_{pii,\alpha}$ or $z_{sii,\alpha}$ (mW/cm^2)	10.42					
	I_{spta} at z_{pii} or z_{sii} (mW/cm^2)	11.15					
	p_r at z_{pii} (MPa)	1.56					
Operating control conditions	Acoustic power	100%	100%		100%		100%
	Display depth	16cm	16cm		16cm		16cm
	B Focus Position	3.0cm	11.0cm		3.0cm		11.0cm
	SV Position	3.0cm	11.0cm		3.0cm		11.0cm
	B Working Frequency	Pen	HRes		HPen		Pen
	PW Working Frequency	Pen	Gen		Pen		Pen
	B PRF	2789	2092		357		2789
	PW PRF	697	697		4903		697
	PW SV	0.5mm	0.5mm		0.5mm		0.5mm

Transducer Model: C4-1s

Imaging Mode: Color+B-Mode / Power+B-Mode

Index label		MI	TIS		TIB		TIC
			At surface	Below surface	At surface	Below surface	
Maximum index value		0.96	0.45		0.39		1.76
Index component value			0.45	0.45	0.39	0.39	
Acoustic Parameters	$p_{r,\alpha}$ at z_{MI} (MPa)	1.36					
	P (mW)		151.00		140.00		91.00
	$P_{1\times1}$ (mW)		47.50		41.54		
	z_s (cm)			/			
	z_b (cm)					/	
	z_{MI} (cm)	0.50					
	$z_{pii,\alpha}$ (cm)	0.50					
	f_{awf} (MHz)	2.01	2.34		2.34		2.34
Other Information	prr (Hz)	1,074.00					
	srr (Hz)	16.00					
	n_{pps}	/					
	$I_{pa,\alpha}$ at $z_{pii,\alpha}$ (W/cm^2)	61.16					
	$I_{spta,\alpha}$ at $z_{pii,\alpha}$ or $z_{sii,\alpha}$ (mW/cm^2)	2.35					
	I_{spta} at z_{pii} or z_{sii} (mW/cm^2)	2.51					
	p_r at z_{pii} (MPa)	1.41					
Operating control conditions	Acoustic power	100%	100%		100%		100%
	Display depth	16cm	16cm		16cm		16cm
	B Focus Position	2.0cm	11.0cm		11.0cm		8.0cm
	Color Sampling Gate Position	2.0cm	11.0cm		11.0cm		8.0cm
	B Working Frequency	Pen	HRes		HRes		Pen
	C Working Frequency	Pen	Res		Res		Res
	B PRF	1074	2367		2367		3027
	Color PRF	455	1147		1147		1467

Transducer Model: C4-1s

Imaging Mode: Color+B+PW-Mode/Power+B+PW-Mode

Index label		MI	TIS		TIB		TIC
			At surface	Below surface	At surface	Below surface	
Maximum index value		0.97	0.88		2.05		2.38
Index component value			0.74	0.88	0.50	2.05	
Acoustic Parameters	$p_{r,\alpha}$ at z_{MI} (MPa)	1.38					
	P (mW)		133.42		95.16		128.89
	$P_{1\times1}$ (mW)		66.81		57.72		
	z_s (cm)			3.40			
	z_b (cm)					3.57	
	z_{MI} (cm)	0.50					
	$z_{pii,\alpha}$ (cm)	0.50					
	f_{awf} (MHz)	2.01	2.35		2.32		2.33
Other Information	prr (Hz)	248.00					
	srr (Hz)	9.00					
	n_{pps}	/					
	$I_{pa,\alpha}$ at $z_{pii,\alpha}$ (W/cm^2)	62.55					
	$I_{spta,\alpha}$ at $z_{pii,\alpha}$ or $z_{sii,\alpha}$ (mW/cm^2)	1.35					
	I_{spta} at z_{pii} or z_{sii} (mW/cm^2)	1.45					
	p_r at z_{pii} (MPa)	1.43					
Operating control conditions	Acoustic power	100%	100%		100%		100%
	Display depth	16cm	16cm		16cm		16cm
	B Focus Position	2.0cm	6.0cm		3.0cm		7.0cm
	Color SG Position	2.0cm	6.0cm		3.0cm		7.0cm
	PW SV Position	2.0cm	6.0cm		3.0cm		7.0cm
	B Working Frequency	Pen	HGen		HRes		HPen
	C Working Frequency	Gen	Res		Res		Res
	PW Working Frequency	Pen	Res		Pen		Pen
	B PRF	248	248		248		248
	C PRF	327	328		328		328
	PW PRF	4770	4739		4739		4739
	PW SV	0.5mm	0.5mm		0.5mm		0.5mm

Transducer Model: C4-1s

Imaging Mode: CM/B+CM

Index label		MI	TIS		TIB		TIC
			At surface	Below surface	At surface	Below surface	
Maximum index value		0.99	0.89		3.97		2.05
Index component value			0.69	0.89	0.89	3.97	
Acoustic Parameters	$p_{r,\alpha}$ at z_{MI} (MPa)	1.52					
	P (mW)		139.17		133.04		135.30
	$P_{1\times1}$ (mW)		63.71		80.98		
	z_s (cm)			3.29			
	z_b (cm)					2.23	
	z_{MI} (cm)	1.56					
	$z_{pii,\alpha}$ (cm)	1.56					
	f_{awf} (MHz)	2.34	2.33		2.32		2.34
Other Information	*prr* (Hz)	1,487.00					
	srr (Hz)	/					
	n_{pps}	/					
	$I_{pa,\alpha}$ at $z_{pii,\alpha}$ (W/cm^2)	96.90					
	$I_{spta,\alpha}$ at $z_{pii,\alpha}$ or $z_{sii,\alpha}$ (mW/cm^2)	229.60					
	I_{spta} at z_{pii} or z_{sii} (mW/cm^2)	297.58					
	p_r at z_{pii} (MPa)	1.70					
Operating control conditions	Acoustic power	100%	100%		100%		100%
	Display depth	16cm	16cm		16cm		16cm
	M Focus Position	2.0cm	6.0cm		3.0cm		6.0cm
	CM Focus Position	2.0cm	6.0cm		3.0cm		6.0cm
	M Working Frequency	HPen	HRes		Pen		Pen
	CM Working Frequency	Res	Res		Res		Res
	M PRF	123	250		250		250
	CM PRF	1487	3000		3000		3000

Transducer Model: C4-1s

Imaging Mode: CW-mode

Index label		MI	TIS		TIB		TIC
			At surface	Below surface	At surface	Below surface	
Maximum index value		0.08	0.64		2.68		1.15
Index component value			0.64	0.60	1.15	2.68	
Acoustic Parameters	$p_{r,\alpha}$ at z_{MI} (MPa)	0.11					
	P (mW)		100.86		100.86		100.86
	$P_{1\times1}$ (mW)		67.24		26.90		
	z_s (cm)			3.37			
	z_b (cm)					3.47	
	z_{MI} (cm)	3.62					
	$z_{pii,\alpha}$ (cm)	3.62					
	f_{awf} (MHz)	2.00	2.00		2.00		2.00
Other Information	prr (Hz)	/					
	srr (Hz)	/					
	n_{pps}	/					
	$I_{pa,\alpha}$ at $z_{pii,\alpha}$ (W/cm^2)	0.30					
	$I_{spta,\alpha}$ at $z_{pii,\alpha}$ or $z_{sii,\alpha}$ (mW/cm^2)	287.26					
	I_{spta} at z_{pii} or z_{sii} (mW/cm^2)	473.52					
	p_r at z_{pii} (MPa)	0.15					
Operating control conditions	Acoustic power	100%	100%		100%		100%
	Display depth	5.0cm	5.0cm		5.0cm		5.0cm
	Focus position	3.0cm	3.0cm		3.0cm		3.0cm
	Working Frequency	5	5		5		5

J.2 C5-1s

Transducer Model: C5-1s

Imaging Mode: M-mode

Index label		MI	TIS		TIB		TIC
			At surface	Below surface	At surface	Below surface	
Maximum index value		1.42	0.44		1.11		0.99
Index component value			0.24	0.44	1.10	1.11	
Acoustic Parameters	$p_{r,\alpha}$ at z_{MI} (MPa)	2.52					
	P (mW)		65.98		65.98		65.98
	$P_{1\times1}$ (mW)		23.61		37.11		
	z_s (cm)			2.84			
	z_b (cm)					3.97	
	z_{MI} (cm)	1.97					
	$z_{pii,\alpha}$ (cm)	1.97					
	f_{awf} (MHz)	3.13	2.10		2.10		2.10
Other Information	*prr* (Hz)	1,000.00					
	srr (Hz)	/					
	n_{pps}	/					
	$I_{pa,\alpha}$ at $z_{pii,\alpha}$ (W/cm^2)	274.60					
	$I_{spta,\alpha}$ at $z_{pii,\alpha}$ or $z_{sii,\alpha}$ (mW/cm^2)	113.81					
	I_{spta} at z_{pii} or z_{sii} (mW/cm^2)	174.41					
	p_r at z_{pii} (MPa)	3.11					
Operating control conditions	Acoustic power	100%	100%		100%		100%
	Display depth	23cm	23cm		23cm		23cm
	Focus position	2.0cm	13.0cm		4.0cm		7.0cm
	Working Frequency	Gen	HGen		HGen		HGen
	PRF	1000	2000		2000		2000

Transducer Model: C5-1s

Imaging Mode: B-mode

Index label		MI	TIS		TIB		TIC
			At surface	Below surface	At surface	Below surface	
Maximum index value		1.11	0.14		0.67		0.67
Index component value			0.14	0.14	0.67	0.14	
Acoustic Parameters	$p_{r,\alpha}$ at z_{MI} (MPa)	1.97					
	P (mW)		86.80		86.80		86.80
	$P_{1\times1}$ (mW)		10.68		10.68		
	z_s (cm)			/			
	z_b (cm)					/	
	z_{MI} (cm)	1.90					
	$z_{pii,\alpha}$ (cm)	1.90					
	f_{awf} (MHz)	3.12	2.65		2.65		2.65
Other Information	*prr* (Hz)	7,575.00					
	srr (Hz)	77.00					
	n_{pps}	1.33					
	$I_{pa,\alpha}$ at $z_{pii,\alpha}$ (W/cm^2)	231.07					
	$I_{spta,\alpha}$ at $z_{pii,\alpha}$ or $z_{sii,\alpha}$ (mW/cm^2)	22.43					
	I_{spta} at z_{pii} or z_{sii} (mW/cm^2)	33.92					
	p_r at z_{pii} (MPa)	2.36					
Operating control conditions	Acoustic power	100%	100%		100%		100%
	Display depth	7cm	23cm		23cm		23cm
	Focus position	2.0cm	8.0cm		8.0cm		8.0cm
	Working Frequency	Gen	Gen		Gen		Pen
	PRF	7575	2912		2912		2912

Transducer Model: C5-1s

Imaging Mode: B+M-mode

Index label		MI	TIS		TIB		TIC
			At surface	Below surface	At surface	Below surface	
Maximum index value		1.23	0.29		1.27		0.95
Index component value			0.26	0.29	0.26	1.27	
Acoustic Parameters	$p_{r,\alpha}$ at z_{MI} (MPa)	2.16					
	P (mW)		96.34		96.34		96.34
	$P_{1\times1}$ (mW)		25.00		25.00		
	z_s (cm)			2.25			
	z_b (cm)					2.58	
	z_{MI} (cm)	1.97					
	$z_{pii,\alpha}$ (cm)	1.97					
	f_{awf} (MHz)	3.11	2.22		2.22		2.22
Other Information	prr (Hz)	500.00					
	srr (Hz)	15.00					
	n_{pps}	/					
	$I_{pa,\alpha}$ at $z_{pii,\alpha}$ (W/cm^2)	296.95					
	$I_{spta,\alpha}$ at $z_{pii,\alpha}$ or $z_{sii,\alpha}$ (mW/cm^2)	61.96					
	I_{spta} at z_{pii} or z_{sii} (mW/cm^2)	94.94					
	p_r at z_{pii} (MPa)	2.62					
Operating control conditions	Acoustic power	100%	100%		100%		100%
	Display depth	23cm	7cm		7cm		23cm
	B/M Focus position	2.0cm	3.0cm		3.0cm		7.0cm
	B/M Working Frequency	Gen	HGen		HGen		HGen
	B PRF	1500	4000		4000		2000
	M PRF	500	2000		2000		500

Transducer Model: C5-1s

Imaging Mode: PW-mode

Index label		MI	TIS		TIB		TIC
			At surface	Below surface	At surface	Below surface	
Maximum index value		0.96	0.96		2.93		1.66
Index component value			0.80	0.96	1.66	2.93	
Acoustic Parameters	$p_{r,\alpha}$ at z_{MI} (MPa)	1.36					
	P (mW)		113.17		113.17		113.17
	$P_{1\times1}$ (mW)		55.69		49.51		
	z_s (cm)			2.53			
	z_b (cm)					5.34	
	z_{MI} (cm)	1.30					
	$z_{pii,\alpha}$ (cm)	1.30					
	f_{awf} (MHz)	2.00	3.00		3.00		3.00
Other Information	prr (Hz)	699.00					
	srr (Hz)	/					
	n_{pps}	/					
	$I_{pa,\alpha}$ at $z_{pii,\alpha}$ (W/cm^2)	94.23					
	$I_{spta,\alpha}$ at $z_{pii,\alpha}$ or $z_{sii,\alpha}$ (mW/cm^2)	112.64					
	I_{spta} at z_{pii} or z_{sii} (mW/cm^2)	139.09					
	p_r at z_{pii} (MPa)	1.18					
Operating control conditions	Acoustic power	100%	100%		100%		100%
	Display depth	7cm	23cm		23cm		23cm
	SV Position	2.0cm	7.0cm		8.0cm		8.0cm
	Working Frequency	Pen	Res		Pen		Gen
	PRF	699	5699		5699		5699
	SV	0.5mm	0.5mm		0.5mm		0.5mm

Transducer Model: C5-1s

Imaging Mode: B+PW-mode

Index label		MI	TIS		TIB		TIC
			At surface	Below surface	At surface	Below surface	
Maximum index value		1.20	1.12		2.95		2.20
Index component value			0.95	1.12	0.86	2.95	
Acoustic Parameters	$p_{r,\alpha}$ at z_{MI} (MPa)	1.85					
	P (mW)		181.70		181.70		181.70
	$P_{1\times1}$ (mW)		64.69		58.42		
	z_s (cm)			2.48			
	z_b (cm)					5.36	
	z_{MI} (cm)	2.59					
	$z_{pii,\alpha}$ (cm)	2.59					
	f_{awf} (MHz)	2.38	3.60		3.60		3.60
Other Information	prr (Hz)	341.00					
	srr (Hz)	5.00					
	n_{pps}	1.33					
	$I_{pa,\alpha}$ at $z_{pii,\alpha}$ (W/cm^2)	203.32					
	$I_{spta,\alpha}$ at $z_{pii,\alpha}$ or $z_{sii,\alpha}$ (mW/cm^2)	2.09					
	I_{spta} at z_{pii} or z_{sii} (mW/cm^2)	3.22					
	p_r at z_{pii} (MPa)	2.24					
Operating control conditions	Acoustic power	100%	100%		100%		100%
	Display depth	23cm	23cm		23cm		23cm
	B Focus Position	3.0cm	7.0cm		8.0cm		8.0cm
	SV Position	3.0cm	7.0cm		8.0cm		8.0cm
	B Working Frequency	Pen	Res		Pen		Pen
	PW Working Frequency	Pen	Res		Pen		Pen
	B PRF	341	149		149		339
	PW PRF	12349	5399		5399		5030
	PW SV	0.5mm	0.5mm		0.5mm		0.5mm

Transducer Model: C5-1s

Imaging Mode: Color+B-Mode / Power+B-Mode

Index label		MI	TIS		TIB		TIC
			At surface	Below surface	At surface	Below surface	
Maximum index value		1.26	0.45		0.45		2.13
Index component value			0.45	0.45	0.45	0.45	
Acoustic Parameters	$p_{r,\alpha}$ at z_{MI} (MPa)	1.92					
	P (mW)		245.60		245.60		245.60
	$P_{1\times1}$ (mW)		37.86		37.86		
	z_s (cm)			/			
	z_b (cm)					/	
	z_{MI} (cm)	2.08					
	$z_{pii,\alpha}$ (cm)	2.08					
	f_{awf} (MHz)	2.34	2.70		2.70		2.70
Other Information	prr (Hz)	1,006.00					
	srr (Hz)	13.00					
	n_{pps}	/					
	$I_{pa,\alpha}$ at $z_{pii,\alpha}$ (W/cm^2)	208.99					
	$I_{spta,\alpha}$ at $z_{pii,\alpha}$ or $z_{sii,\alpha}$ (mW/cm^2)	5.14					
	I_{spta} at z_{pii} or z_{sii} (mW/cm^2)	7.23					
	p_r at z_{pii} (MPa)	2.22					
Operating control conditions	Acoustic power	100%	100%		100%		100%
	Display depth	23cm	23cm		23cm		23cm
	B Focus Position	2.0cm	7.0cm		7.0cm		7.0cm
	Color Sampling Gate Position	2.0cm	7.0cm		7.0cm		7.0cm
	B Working Frequency	Pen	Gen		Gen		Pen
	C Working Frequency	Pen	Gen		Gen		Pen
	B PRF	1006	722		722		706
	Color PRF	6628	4881		4881		5012

Transducer Model: C5-1s

Imaging Mode: Color+B+PW-Mode/Power+B+PW-Mode

Index label		MI	TIS		TIB		TIC
			At surface	Below surface	At surface	Below surface	
Maximum index value		1.28	0.56		1.71		1.50
Index component value			0.56	0.55	0.39	1.71	
Acoustic Parameters	$p_{r,\alpha}$ at z_{MI} (MPa)	1.98					
	P (mW)		151.90		151.90		151.90
	$P_{1\times1}$ (mW)		42.13		29.21		
	z_s (cm)			1.30			
	z_b (cm)					2.46	
	z_{MI} (cm)	1.34					
	$z_{pii,\alpha}$ (cm)	1.34					
	f_{awf} (MHz)	2.41	3.52		3.52		3.52
Other Information	prr (Hz)	10,638.00					
	srr (Hz)	34.00					
	n_{pps}	/					
	$I_{pa,\alpha}$ at $z_{pii,\alpha}$ (W/cm^2)	179.75					
	$I_{spta,\alpha}$ at $z_{pii,\alpha}$ or $z_{sii,\alpha}$ (mW/cm^2)	14.07					
	I_{spta} at z_{pii} or z_{sii} (mW/cm^2)	17.71					
	p_r at z_{pii} (MPa)	2.16					
Operating control conditions	Acoustic power	100%	100%		100%		100%
	Display depth	23cm	23cm		23cm		23cm
	B Focus Position	2.0cm	2.0cm		7.0cm		8.0cm
	Color SG Position	2.0cm	2.0cm		7.0cm		8.0cm
	PW SV Position	2.0cm	2.0cm		7.0cm		8.0cm
	B Working Frequency	Res	Res		Res		Res
	C Working Frequency	Res	Res		Res		Res
	PW Working Frequency	Pen	Res		Pen		Pen
	B PRF	559	559		500		453
	C PRF	10638	10638		301		293
	PW PRF	699	699		4462		4493
	PW SV	0.5mm	0.5mm		0.5mm		0.5mm

Transducer Model: C5-1s

Imaging Mode: CM/B+CM

Index label		MI	TIS		TIB		TIC
			At surface	Below surface	At surface	Below surface	
Maximum index value		1.37	0.35		1.15		0.73
Index component value			0.19	0.35	0.28	1.15	
Acoustic Parameters	$p_{r,\alpha}$ at z_{MI} (MPa)	2.12					
	P (mW)		55.30		55.30		55.30
	$P_{1\times1}$ (mW)		19.80		29.01		
	z_s (cm)			2.89			
	z_b (cm)					4.65	
	z_{MI} (cm)	1.71					
	$z_{pii,\alpha}$ (cm)	1.71					
	f_{awf} (MHz)	2.38	2.91		2.91		2.91
Other Information	prr (Hz)	83.00					
	srr (Hz)	/					
	n_{pps}	/					
	$I_{pa,\alpha}$ at $z_{pii,\alpha}$ (W/cm^2)	258.65					
	$I_{spta,\alpha}$ at $z_{pii,\alpha}$ or $z_{sii,\alpha}$ (mW/cm^2)	13.03					
	I_{spta} at z_{pii} or z_{sii} (mW/cm^2)	17.44					
	p_r at z_{pii} (MPa)	2.39					
Operating control conditions	Acoustic power	100%	100%		100%		100%
	Display depth	23cm	23cm		23cm		23cm
	M Focus Position	2.0cm	12.0cm		6.0cm		12.0cm
	CM Focus Position	2.0cm	12.0cm		6.0cm		12.0cm
	M Working Frequency	Pen	Gen		Pen		Gen
	CM Working Frequency	Pen	Gen		Pen		Gen
	M PRF	83	83		83		250
	CM PRF	1333	1333		1333		4000

J.3 C11-3s

Transducer Model: C11-3s

Imaging Mode: M-mode

Index label		MI	TIS		TIB		TIC
			At surface	Below surface	At surface	Below surface	
Maximum index value		1.49	0.54		0.79		0.79
Index component value			0.54	0.36	0.79	0.73	
Acoustic Parameters	$p_{r,\alpha}$ at z_{MI} (MPa)	3.51					
	P (mW)		24.61		24.61		24.61
	$P_{1\times1}$ (mW)		24.61		24.61		
	z_s (cm)			1.27			
	z_b (cm)					1.44	
	z_{MI} (cm)	0.40					
	$z_{pii,\alpha}$ (cm)	0.40					
	f_{awf} (MHz)	5.52	4.61		4.61		4.61
Other Information	prr (Hz)	1,000.00					
	srr (Hz)	/					
	n_{pps}	/					
	$I_{pa,\alpha}$ at $z_{pii,\alpha}$ (W/cm^2)	282.89					
	$I_{spta,\alpha}$ at $z_{pii,\alpha}$ or $z_{sii,\alpha}$ (mW/cm^2)	82.55					
	I_{spta} at z_{pii} or z_{sii} (mW/cm^2)	96.16					
	p_r at z_{pii} (MPa)	3.79					
Operating control conditions	Acoustic power	100%	100%		100%		100%
	Display depth	3cm	15cm		15cm		15cm
	Focus position	0.5cm	12.0cm		2.0cm		1.5cm
	Working Frequency	Gen	HRes		HRes		HRes
	PRF	1000	2000		2000		2000

Transducer Model: C11-3s

Imaging Mode: B-mode

Index label		MI	TIS		TIB		TIC
			At surface	Below surface	At surface	Below surface	
Maximum index value		1.10	0.15		0.41		0.41
Index component value			0.15	0.15	0.41	0.15	
Acoustic Parameters	$p_{r,\alpha}$ at z_{MI} (MPa)	2.60					
	P (mW)		21.30		21.30		21.30
	$P_{1\times1}$ (mW)		7.90		7.90		
	z_s (cm)			/			
	z_b (cm)					/	
	z_{MI} (cm)	0.40					
	$z_{pii,\alpha}$ (cm)	0.40					
	f_{awf} (MHz)	5.52	4.03		4.03		4.03
Other Information	*prr* (Hz)	4,799.00					
	srr (Hz)	48.00					
	n_{pps}	1.50					
	$I_{pa,\alpha}$ at $z_{pii,\alpha}$ (W/cm^2)	290.53					
	$I_{spta,\alpha}$ at $z_{pii,\alpha}$ or $z_{sii,\alpha}$ (mW/cm^2)	12.49					
	I_{spta} at z_{pii} or z_{sii} (mW/cm^2)	14.55					
	p_r at z_{pii} (MPa)	2.80					
Operating control conditions	Acoustic power	100%	100%		100%		100%
	Display depth	3cm	15cm		15cm		15cm
	Focus position	0.5cm	6.0cm		6.0cm		6.0cm
	Working Frequency	Gen	HRes		HRes		HRes
	PRF	4799	2457		2457		2457

Transducer Model: C11-3s

Imaging Mode: B+M-mode

Index label		MI	TIS		TIB		TIC
			At surface	Below surface	At surface	Below surface	
Maximum index value		1.17	0.27		0.69		0.58
Index component value			0.27	0.24	0.27	0.69	
Acoustic Parameters	$p_{r,\alpha}$ at z_{MI} (MPa)	2.75					
	P (mW)		26.44		26.44		26.44
	$P_{1\times1}$ (mW)		12.98		12.98		
	z_s (cm)			1.27			
	z_b (cm)					1.36	
	z_{MI} (cm)	0.40					
	$z_{pii,\alpha}$ (cm)	0.40					
	f_{awf} (MHz)	5.50	4.37		4.37		4.37
Other Information	*prr* (Hz)	1,000.00					
	srr (Hz)	20.00					
	n_{pps}	/					
	$I_{pa,\alpha}$ at $z_{pii,\alpha}$ (W/cm^2)	251.17					
	$I_{spta,\alpha}$ at $z_{pii,\alpha}$ or $z_{sii,\alpha}$ (mW/cm^2)	78.61					
	I_{spta} at z_{pii} or z_{sii} (mW/cm^2)	91.97					
	p_r at z_{pii} (MPa)	2.77					
Operating control conditions	Acoustic power	100%	100%		100%		100%
	Display depth	3cm	15cm		3cm		15cm
	B/M Focus position	0.5cm	6.0cm		1.0cm		5.0cm
	B/M Working Frequency	Gen	HRes		HRes		HRes
	B PRF	2000	2000		4000		2000
	M PRF	1000	250		2000		250

Transducer Model: C11-3s

Imaging Mode: PW-mode

Index label		MI	TIS		TIB		TIC
			At surface	Below surface	At surface	Below surface	
Maximum index value		1.42	1.06		1.78		1.46
Index component value			1.06	0.69	1.46	1.78	
Acoustic Parameters	$p_{r,\alpha}$ at z_{MI} (MPa)	2.99					
	P (mW)		39.14		39.14		39.14
	$P_{1\times1}$ (mW)		39.14		39.14		
	z_s (cm)			1.10			
	z_b (cm)					2.30	
	z_{MI} (cm)	0.40					
	$z_{pii,\alpha}$ (cm)	0.40					
	f_{awf} (MHz)	4.45	5.68		5.68		5.68
Other Information	prr (Hz)	699.00					
	srr (Hz)	/					
	n_{pps}	/					
	$I_{pa,\alpha}$ at $z_{pii,\alpha}$ (W/cm^2)	438.52					
	$I_{spta,\alpha}$ at $z_{pii,\alpha}$ or $z_{sii,\alpha}$ (mW/cm^2)	236.78					
	I_{spta} at z_{pii} or z_{sii} (mW/cm^2)	267.74					
	p_r at z_{pii} (MPa)	3.18					
Operating control conditions	Acoustic power	100%	100%		100%		100%
	Display depth	3cm	15cm		15cm		15cm
	SV Position	0.5cm	4.0cm		4.0cm		4.0cm
	Working Frequency	Pen	Res		Pen		Res
	PRF	699	11997		11997		11997
	SV	0.5mm	0.5mm		0.5mm		0.5mm

Transducer Model: C11-3s

Imaging Mode: B+PW-mode

Index label		MI	TIS		TIB		TIC
			At surface	Below surface	At surface	Below surface	
Maximum index value		0.91	0.97		1.59		1.35
Index component value			0.97	0.68	0.97	1.59	
Acoustic Parameters	$p_{r,\alpha}$ at z_{MI} (MPa)	2.14					
	P (mW)		35.44		35.44		35.44
	$P_{1\times1}$ (mW)		35.44		35.44		
	z_s (cm)			1.10			
	z_b (cm)					2.22	
	z_{MI} (cm)	1.62					
	$z_{pii,\alpha}$ (cm)	1.62					
	f_{awf} (MHz)	5.53	7.14		7.14		7.14
Other Information	prr (Hz)	699.00					
	srr (Hz)	49.00					
	n_{pps}	/					
	$I_{pa,\alpha}$ at $z_{pii,\alpha}$ (W/cm^2)	188.08					
	$I_{spta,\alpha}$ at $z_{pii,\alpha}$ or $z_{sii,\alpha}$ (mW/cm^2)	89.43					
	I_{spta} at z_{pii} or z_{sii} (mW/cm^2)	197.94					
	p_r at z_{pii} (MPa)	2.76					
Operating control conditions	Acoustic power	100%	100%		100%		100%
	Display depth	15cm	15cm		15cm		15cm
	B Focus Position	4.0cm	4.0cm		4.0cm		4.0cm
	SV Position	4.0cm	4.0cm		4.0cm		4.0cm
	B Working Frequency	Res	Res		Pen		Res
	PW Working Frequency	Res	Res		Pen		Res
	B PRF	3499	134		134		134
	PW PRF	699	5519		5519		5519
	PW SV	0.5mm	0.5mm		0.5mm		0.5mm

Transducer Model: C11-3s

Imaging Mode: Color+B-Mode / Power+B-Mode

Index label		MI	TIS		TIB		TIC
			At surface	Below surface	At surface	Below surface	
Maximum index value		1.28	0.33		0.33		0.70
Index component value			0.33	0.33	0.33	0.33	
Acoustic Parameters	$p_{r,\alpha}$ at z_{MI} (MPa)	2.70					
	P (mW)		38.20		38.20		38.20
	$P_{1\times1}$ (mW)		13.83		13.83		
	z_s (cm)			/			
	z_b (cm)					/	
	z_{MI} (cm)	0.40					
	$z_{pii,\alpha}$ (cm)	0.40					
	f_{awf} (MHz)	4.44	5.47		5.47		5.47
Other Information	prr (Hz)	10,797.00					
	srr (Hz)	16.00					
	n_{pps}	13.00					
	$I_{pa,\alpha}$ at $z_{pii,\alpha}$ (W/cm^2)	337.20					
	$I_{spta,\alpha}$ at $z_{pii,\alpha}$ or $z_{sii,\alpha}$ (mW/cm^2)	12.46					
	I_{spta} at z_{pii} or z_{sii} (mW/cm^2)	14.08					
	p_r at z_{pii} (MPa)	2.87					
Operating control conditions	Acoustic power	100%	100%		100%		100%
	Display depth	3cm	3cm		3cm		3cm
	B Focus Position	0.5cm	0.5cm		0.5cm		0.5cm
	Color Sampling Gate Position	0.5cm	0.5cm		0.5cm		0.5cm
	B Working Frequency	Pen	Gen		Gen		Pen
	C Working Frequency	Pen	Gen		Gen		Pen
	B PRF	1627	1310		1310		1557
	Color PRF	10797	8867		8867		11155

Transducer Model: C11-3s

Imaging Mode: Color+B+PW-Mode/Power+B+PW-Mode

Index label		MI	TIS		TIB		TIC
			At surface	Below surface	At surface	Below surface	
Maximum index value		1.49	0.54		2.45		2.68
Index component value			0.54	0.52	1.12	2.45	
Acoustic Parameters	$p_{r,\alpha}$ at z_{MI} (MPa)	3.14					
	P (mW)		46.89		46.89		46.89
	$P_{1\times1}$ (mW)		22.61		46.89		
	z_s (cm)			0.57			
	z_b (cm)					0.68	
	z_{MI} (cm)	0.40					
	$z_{pii,\alpha}$ (cm)	0.40					
	f_{awf} (MHz)	4.44	5.83		5.83		5.83
Other Information	prr (Hz)	13,065.00					
	srr (Hz)	38.00					
	n_{pps}	8.75					
	$I_{pa,\alpha}$ at $z_{pii,\alpha}$ (W/cm^2)	501.46					
	$I_{spta,\alpha}$ at $z_{pii,\alpha}$ or $z_{sii,\alpha}$ (mW/cm^2)	44.17					
	I_{spta} at z_{pii} or z_{sii} (mW/cm^2)	49.93					
	p_r at z_{pii} (MPa)	3.33					
Operating control conditions	Acoustic power	100%	100%		100%		100%
	Display depth	3cm	3cm		3cm		3cm
	B Focus Position	0.5cm	0.5cm		1.0cm		0.5cm
	Color SG Position	0.5cm	0.5cm		1.0cm		0.5cm
	PW SV Position	0.5cm	0.5cm		1.0cm		0.5cm
	B Working Frequency	Pen	Gen		Res		Pen
	C Working Frequency	Pen	Gen		Res		Pen
	PW Working Frequency	Pen	Pen		Pen		Pen
	B PRF	1244	1244		69		67
	C PRF	13065	13065		254		248
	PW PRF	699	699		5097		5096
	PW SV	0.5mm	0.5mm		0.5mm		0.5mm

Transducer Model: C11-3s

Imaging Mode: CM/B+CM

Index label		MI	TIS		TIB		TIC
			At surface	Below surface	At surface	Below surface	
Maximum index value		1.24	0.76		1.55		2.95
Index component value			0.76	0.56	0.92	1.55	
Acoustic Parameters	$p_{r,\alpha}$ at z_{MI} (MPa)	2.76					
	P (mW)		38.52		38.52		38.52
	$P_{1\times1}$ (mW)		31.79		38.52		
	z_s (cm)			1.44			
	z_b (cm)					1.44	
	z_{MI} (cm)	1.19					
	$z_{pii,\alpha}$ (cm)	1.19					
	f_{awf} (MHz)	4.97	5.40		5.40		5.40
Other Information	prr (Hz)	1,333.00					
	srr (Hz)	/					
	n_{pps}	/					
	$I_{pa,\alpha}$ at $z_{pii,\alpha}$ (W/cm^2)	435.56					
	$I_{spta,\alpha}$ at $z_{pii,\alpha}$ or $z_{sii,\alpha}$ (mW/cm^2)	423.72					
	I_{spta} at z_{pii} or z_{sii} (mW/cm^2)	638.13					
	p_r at z_{pii} (MPa)	3.39					
Operating control conditions	Acoustic power	100%	100%		100%		100%
	Display depth	15cm	15cm		15cm		3cm
	M Focus Position	1.5cm	10.0cm		3.0cm		0.5cm
	CM Focus Position	1.5cm	10.0cm		3.0cm		0.5cm
	M Working Frequency	Gen	Gen		Gen		Gen
	CM Working Frequency	Gen	Gen		Gen		Gen
	M PRF	83	83		250		83
	CM PRF	1333	1333		2000		1333

J.4 L12-3RCs

Transducer Model: L12-3RCs

Imaging Mode: M-mode

Index label		MI	TIS		TIB		TIC
			At surface	Below surface	At surface	Below surface	
Maximum index value		1.27	0.54		0.81		0.77
Index component value			0.54	0.40	0.68	0.81	
Acoustic Parameters	$p_{r,\alpha}$ at z_{MI} (MPa)	3.29					
	P (mW)		26.44		22.68		26.34
	$P_{1\times1}$ (mW)		20.66		18.90		
	z_s (cm)			1.43			
	z_b (cm)					1.43	
	z_{MI} (cm)	0.88					
	$z_{pii,\alpha}$ (cm)	0.88					
	f_{awf} (MHz)	6.70	5.48		5.45		5.46
Other Information	*prr* (Hz)	2,000.00					
	srr (Hz)	/					
	n_{pps}	/					
	$I_{pa,\alpha}$ at $z_{pii,\alpha}$ (W/cm^2)	393.63					
	$I_{spta,\alpha}$ at $z_{pii,\alpha}$ or $z_{sii,\alpha}$ (mW/cm^2)	154.38					
	I_{spta} at z_{pii} or z_{sii} (mW/cm^2)	232.46					
	p_r at z_{pii} (MPa)	4.04					
Operating control conditions	Acoustic power	100%	100%		100%		100%
	Display depth	3.5cm	12cm		12cm		12cm
	Focus position	1.0cm	5.0cm		4.5cm		5.0cm
	Working Frequency	Pen	Pen		Pen		Pen
	PRF	2000	2000		2000		2000

Transducer Model: L12-3RCs

Imaging Mode: B-mode

Index label		MI	TIS		TIB		TIC
			At surface	Below surface	At surface	Below surface	
Maximum index value		1.28	0.27		0.61		0.64
Index component value			0.27	0.27	0.61	0.23	
Acoustic Parameters	$p_{r,\alpha}$ at z_{MI} (MPa)	3.30					
	P (mW)		38.00		36.00		38.00
	$P_{1\times1}$ (mW)		9.90		9.38		
	z_s (cm)			/			
	z_b (cm)					/	
	z_{MI} (cm)	1.08					
	$z_{pii,\alpha}$ (cm)	1.08					
	f_{awf} (MHz)	6.59	5.64		5.05		5.59
Other Information	*prr* (Hz)	6,666.00					
	srr (Hz)	34.00					
	n_{pps}	1.33					
	$I_{pa,\alpha}$ at $z_{pii,\alpha}$ (W/cm^2)	431.88					
	$I_{spta,\alpha}$ at $z_{pii,\alpha}$ or $z_{sii,\alpha}$ (mW/cm^2)	8.99					
	I_{spta} at z_{pii} or z_{sii} (mW/cm^2)	14.69					
	p_r at z_{pii} (MPa)	4.03					
Operating control conditions	Acoustic power	100%	100%		100%		100%
	Display depth	3.5cm	12cm		12cm		12cm
	Focus position	1.0cm	5.0cm		5.0cm		5.0cm
	Working Frequency	Pen	Pen		Pen		Pen
	PRF	6666	2860		2860		2860

Transducer Model: L12-3RCs

Imaging Mode: B+M-mode

Index label		MI	TIS		TIB		TIC
			At surface	Below surface	At surface	Below surface	
Maximum index value		1.34	0.44		0.50		0.89
Index component value			0.44	0.40	0.22	0.50	
Acoustic Parameters	$p_{r,\alpha}$ at z_{MI} (MPa)	3.45					
	P (mW)		49.16		15.69		47.23
	$P_{1\times1}$ (mW)		16.53		6.82		
	z_s (cm)			1.43			
	z_b (cm)					0.69	
	z_{MI} (cm)	0.88					
	$z_{pii,\alpha}$ (cm)	0.88					
	f_{awf} (MHz)	6.66	5.64		6.89		5.49
Other Information	*prr* (Hz)	2,000.00					
	srr (Hz)	20.00					
	n_{pps}	/					
	$I_{pa,\alpha}$ at $z_{pii,\alpha}$ (W/cm^2)	424.97					
	$I_{spta,\alpha}$ at $z_{pii,\alpha}$ or $z_{sii,\alpha}$ (mW/cm^2)	167.80					
	I_{spta} at z_{pii} or z_{sii} (mW/cm^2)	260.58					
	p_r at z_{pii} (MPa)	4.06					
Operating control conditions	Acoustic power	100%	100%		100%		100%
	Display depth	3.5cm	12cm		3.5cm		12cm
	B/M Focus position	1.0cm	5.0cm		0.5cm		5.0cm
	B/M Working Frequency	Pen	Pen		Pen		Pen
	B PRF	4000	2000		4000		2000
	M PRF	2000	500		2000		500

Transducer Model: L12-3RCs

Imaging Mode: PW-mode

Index label		MI	TIS		TIB		TIC
			At surface	Below surface	At surface	Below surface	
Maximum index value		0.87	0.86		2.56		1.57
Index component value			0.86	0.59	1.55	2.56	
Acoustic Parameters	$p_{r,\alpha}$ at z_{MI} (MPa)	2.09					
	P (mW)		36.00		37.66		38.08
	$P_{1\times1}$ (mW)		36.00		37.66		
	z_s (cm)			1.08			
	z_b (cm)					2.01	
	z_{MI} (cm)	0.50					
	$z_{pii,\alpha}$ (cm)	0.50					
	f_{awf} (MHz)	5.69	5.04		5.07		5.06
Other Information	*prr* (Hz)	697.00					
	srr (Hz)	/					
	n_{pps}	/					
	$I_{pa,\alpha}$ at $z_{pii,\alpha}$ (W/cm^2)	168.17					
	$I_{spta,\alpha}$ at $z_{pii,\alpha}$ or $z_{sii,\alpha}$ (mW/cm^2)	75.32					
	I_{spta} at z_{pii} or z_{sii} (mW/cm^2)	91.68					
	p_r at z_{pii} (MPa)	2.30					
Operating control conditions	Acoustic power	100%	100%		100%		100%
	Display depth	3.5cm	12cm		12cm		12cm
	SV Position	0.5cm	3.5cm		3.0cm		3.0cm
	Working Frequency	Res	Gen		Gen		Gen
	PRF	697	5555		13888		13888
	SV	0.5mm	0.5mm		0.5mm		0.5mm

Transducer Model: L12-3RCs

Imaging Mode: B+PW-mode

Index label		MI	TIS		TIB		TIC
			At surface	Below surface	At surface	Below surface	
Maximum index value		1.35	0.78		2.35		1.37
Index component value			0.78	0.54	0.80	2.35	
Acoustic Parameters	$p_{r,\alpha}$ at z_{MI} (MPa)	3.19					
	P (mW)		35.43		34.94		34.44
	$P_{1\times1}$ (mW)		32.47		33.46		
	z_s (cm)			1.08			
	z_b (cm)					1.78	
	z_{MI} (cm)	1.08					
	$z_{pii,\alpha}$ (cm)	1.08					
	f_{awf} (MHz)	5.59	5.22		5.04		5.26
Other Information	prr (Hz)	638.00					
	srr (Hz)	5.00					
	n_{pps}	1.33					
	$I_{pa,\alpha}$ at $z_{pii,\alpha}$ (W/cm^2)	432.37					
	$I_{spta,\alpha}$ at $z_{pii,\alpha}$ or $z_{sii,\alpha}$ (mW/cm^2)	2.47					
	I_{spta} at z_{pii} or z_{sii} (mW/cm^2)	3.75					
	p_r at z_{pii} (MPa)	3.77					
Operating control conditions	Acoustic power	100%	100%		100%		100%
	Display depth	12cm	12cm		12cm		12cm
	B Focus Position	1.0cm	3.5cm		3.0cm		3.0cm
	SV Position	1.0cm	3.5cm		3.0cm		3.0cm
	B Working Frequency	Pen	Pen		HRes		Pen
	PW Working Frequency	Pen	Gen		Gen		Gen
	B PRF	638	638		638		638
	PW PRF	4863	4863		4863		4863
	PW SV	0.5mm	0.5mm		0.5mm		0.5mm

Transducer Model: L12-3RCs

Imaging Mode: Color+B-Mode / Power+B-Mode

Index label		MI	TIS		TIB		TIC
			At surface	Below surface	At surface	Below surface	
Maximum index value		1.26	0.39		0.37		0.92
Index component value			0.39	0.39	0.37	0.37	
Acoustic Parameters	$p_{r,\alpha}$ at z_{MI} (MPa)	3.02					
	P (mW)		40.00		42.00		42.00
	$P_{1\times1}$ (mW)		13.38		13.90		
	z_s (cm)			/			
	z_b (cm)					/	
	z_{MI} (cm)	0.50					
	$z_{pii,\alpha}$ (cm)	0.50					
	f_{awf} (MHz)	5.78	7.21		7.18		5.62
Other Information	prr (Hz)	3,594.00					
	srr (Hz)	18.00					
	n_{pps}	/					
	$I_{pa,\alpha}$ at $z_{pii,\alpha}$ (W/cm^2)	335.71					
	$I_{spta,\alpha}$ at $z_{pii,\alpha}$ or $z_{sii,\alpha}$ (mW/cm^2)	6.15					
	I_{spta} at z_{pii} or z_{sii} (mW/cm^2)	7.51					
	p_r at z_{pii} (MPa)	3.33					
Operating control conditions	Acoustic power	100%	100%		100%		100%
	Display depth	12cm	12cm		12cm		12cm
	B Focus Position	0.5cm	5.0cm		5.0cm		5.0cm
	Color Sampling Gate Position	0.5cm	5.0cm		5.0cm		5.0cm
	B Working Frequency	Pen	Pen		Pen		Pen
	C Working Frequency	Pen	Res		Res		Gen
	B PRF	3594	4455		4455		4487
	Color PRF	825	1182		1182		1190

Transducer Model: L12-3RCs

Imaging Mode: Color+B+PW-Mode/Power+B+PW-Mode

Index label		MI	TIS		TIB		TIC
			At surface	Below surface	At surface	Below surface	
Maximum index value		1.22	0.60		1.27		1.32
Index component value			0.60	0.47	0.37	1.27	
Acoustic Parameters	$p_{r,\alpha}$ at z_{MI} (MPa)	2.75					
	P (mW)		27.07		19.55		29.72
	$P_{1\times1}$ (mW)		24.12		15.12		
	z_s (cm)			0.88			
	z_b (cm)					1.17	
	z_{MI} (cm)	1.36					
	$z_{pii,\alpha}$ (cm)	1.36					
	f_{awf} (MHz)	5.08	7.13		6.47		7.14
Other Information	*prr* (Hz)	199.00					
	srr (Hz)	6.00					
	n_{pps}	/					
	$I_{pa,\alpha}$ at $z_{pii,\alpha}$ (W/cm^2)	478.89					
	$I_{spta,\alpha}$ at $z_{pii,\alpha}$ or $z_{sii,\alpha}$ (mW/cm^2)	4.46					
	I_{spta} at z_{pii} or z_{sii} (mW/cm^2)	7.30					
	p_r at z_{pii} (MPa)	3.25					
Operating control conditions	Acoustic power	100%	100%		100%		100%
	Display depth	12cm	12cm		12cm		12cm
	B Focus Position	1.5cm	2.0cm		1.5cm		2.0cm
	Color SG Position	1.5cm	2.0cm		1.5cm		2.0cm
	PW SV Position	1.5cm	2.0cm		1.5cm		2.0cm
	B Working Frequency	Pen	Pen		Res		Pen
	C Working Frequency	Gen	Res		Pen		Res
	PW Working Frequency	Pen	Gen		Gen		Gen
	B PRF	652	648		651		648
	C PRF	199	204		199		204
	PW PRF	4739	4708		4729		4708
	PW SV	0.5mm	0.5mm		0.5mm		0.5mm

J.5 L12-4s

Transducer Model: L12-4s

Imaging Mode: M-mode

Index label		MI	TIS		TIB		TIC
			At surface	Below surface	At surface	Below surface	
Maximum index value		1.41	0.23		0.34		0.14
Index component value			0.23	0.21	0.24	0.34	
Acoustic Parameters	$p_{r,\alpha}$ at z_{MI} (MPa)	3.43					
	P (mW)		13.65		5.17		5.60
	$P_{1\times1}$ (mW)		8.32		5.17		
	z_s (cm)			1.48			
	z_b (cm)					1.48	
	z_{MI} (cm)	1.47					
	$z_{pii,\alpha}$ (cm)	1.47					
	f_{awf} (MHz)	5.92	5.86		6.23		5.85
Other Information	prr (Hz)	1,000.00					
	srr (Hz)	/					
	n_{pps}	/					
	$I_{pa,\alpha}$ at $z_{pii,\alpha}$ (W/cm^2)	590.58					
	$I_{spta,\alpha}$ at $z_{pii,\alpha}$ or $z_{sii,\alpha}$ (mW/cm^2)	176.35					
	I_{spta} at z_{pii} or z_{sii} (mW/cm^2)	321.67					
	p_r at z_{pii} (MPa)	4.64					
Operating control conditions	Acoustic power	100%	100%		100%		100%
	Display depth	5cm	5cm		5cm		5cm
	Focus position	1.5cm	4.5cm		1.5cm		4.5cm
	Working Frequency	Pen	HRes		HRes		HRes
	PRF	1000	2000		2000		2000

Transducer Model: L12-4s

Imaging Mode: B-mode

Index label		MI	TIS		TIB		TIC
			At surface	Below surface	At surface	Below surface	
Maximum index value		1.40	0.17		0.33		1.34
Index component value			0.17	0.17	0.33	0.18	
Acoustic Parameters	$p_{r,\alpha}$ at z_{MI} (MPa)	3.05					
	P (mW)		18.18		19.35		79.55
	$P_{1\times1}$ (mW)		4.73		5.04		
	z_s (cm)			/			
	z_b (cm)					/	
	z_{MI} (cm)	1.46					
	$z_{pii,\alpha}$ (cm)	1.46					
	f_{awf} (MHz)	4.74	7.47		7.50		5.67
Other Information	*prr* (Hz)	10,285.00					
	srr (Hz)	35.00					
	n_{pps}	2.00					
	$I_{pa,\alpha}$ at $z_{pii,\alpha}$ (W/cm^2)	275.18					
	$I_{spta,\alpha}$ at $z_{pii,\alpha}$ or $z_{sii,\alpha}$ (mW/cm^2)	15.19					
	I_{spta} at z_{pii} or z_{sii} (mW/cm^2)	24.63					
	p_r at z_{pii} (MPa)	3.78					
Operating control conditions	Acoustic power	100%	100%		100%		100%
	Display depth	5cm	5cm		5cm		5cm
	Focus position	1.5cm	1.0cm		1.0cm		1.0cm
	Working Frequency	HPen	Gen		Gen		Pen
	PRF	10285	10222		10222		10222

Transducer Model: L12-4s

Imaging Mode: B+M-mode

Index label		MI	TIS		TIB		TIC
			At surface	Below surface	At surface	Below surface	
Maximum index value		1.40	0.20		1.08		1.22
Index component value			0.20	0.18	0.54	1.08	
Acoustic Parameters	$p_{r,\alpha}$ at z_{MI} (MPa)	3.37					
	P (mW)		21.83		59.48		64.44
	$P_{1\times1}$ (mW)		7.43		20.11		
	z_s (cm)			0.75			
	z_b (cm)					1.08	
	z_{MI} (cm)	1.19					
	$z_{pii,\alpha}$ (cm)	1.19					
	f_{awf} (MHz)	5.79	5.68		5.69		5.45
Other Information	*prr* (Hz)	8,000.00					
	srr (Hz)	58.00					
	n_{pps}	2.00					
	$I_{pa,\alpha}$ at $z_{pii,\alpha}$ (W/cm^2)	730.52					
	$I_{spta,\alpha}$ at $z_{pii,\alpha}$ or $z_{sii,\alpha}$ (mW/cm^2)	39.09					
	I_{spta} at z_{pii} or z_{sii} (mW/cm^2)	63.05					
	p_r at z_{pii} (MPa)	4.08					
Operating control conditions	Acoustic power	100%	100%		100%		100%
	Display depth	5cm	5cm		5cm		5cm
	B/M Focus position	1.0cm	1.0cm		1.0cm		2.0cm
	B/M Working Frequency	Pen	Pen		Pen		HGen
	B PRF	8000	8000		8000		8000
	M PRF	1000	1000		1000		2000

Transducer Model: L12-4s

Imaging Mode: PW-mode

Index label		MI	TIS		TIB		TIC
			At surface	Below surface	At surface	Below surface	
Maximum index value		0.65	0.85		1.91		1.60
Index component value			0.85	0.58	1.53	1.91	
Acoustic Parameters	$p_{r,\alpha}$ at z_{MI} (MPa)	1.39					
	P (mW)		35.10		40.41		42.36
	$P_{1\times1}$ (mW)		35.10		40.41		
	z_s (cm)			1.06			
	z_b (cm)					1.20	
	z_{MI} (cm)	1.29					
	$z_{pii,\alpha}$ (cm)	1.29					
	f_{awf} (MHz)	4.58	5.06		4.59		4.59
Other Information	*prr* (Hz)	5,299.00					
	srr (Hz)	/					
	n_{pps}	/					
	$I_{pa,\alpha}$ at $z_{pii,\alpha}$ (W/cm^2)	72.26					
	$I_{spta,\alpha}$ at $z_{pii,\alpha}$ or $z_{sii,\alpha}$ (mW/cm^2)	339.92					
	I_{spta} at z_{pii} or z_{sii} (mW/cm^2)	728.16					
	p_r at z_{pii} (MPa)	1.75					
Operating control conditions	Acoustic power	100%	100%		100%		100%
	Display depth	5cm	5cm		5cm		5cm
	SV Position	4.5cm	4.5cm		4.0cm		4.0cm
	Working Frequency	Pen	Gen		Pen		Pen
	PRF	5299	5299		5299		5299
	SV	0.5mm	0.5mm		0.5mm		0.5mm

Transducer Model: L12-4s

Imaging Mode: B+PW-mode

Index label		MI	TIS		TIB		TIC
			At surface	Below surface	At surface	Below surface	
Maximum index value		1.34	0.90		1.96		1.55
Index component value			0.90	0.64	0.93	1.96	
Acoustic Parameters	$p_{r,\alpha}$ at z_{MI} (MPa)	3.19					
	P (mW)		43.10		46.64		46.19
	$P_{1\times1}$ (mW)		36.88		40.72		
	z_s (cm)			1.06			
	z_b (cm)					1.20	
	z_{MI} (cm)	1.38					
	$z_{pii,\alpha}$ (cm)	1.38					
	f_{awf} (MHz)	5.69	5.49		8.30		5.48
Other Information	*prr* (Hz)	1,277.00					
	srr (Hz)	10.00					
	n_{pps}	1.09					
	$I_{pa,\alpha}$ at $z_{pii,\alpha}$ (W/cm^2)	533.26					
	$I_{spta,\alpha}$ at $z_{pii,\alpha}$ or $z_{sii,\alpha}$ (mW/cm^2)	5.51					
	I_{spta} at z_{pii} or z_{sii} (mW/cm^2)	9.66					
	p_r at z_{pii} (MPa)	3.99					
Operating control conditions	Acoustic power	100%	100%		100%		100%
	Display depth	5cm	5cm		5cm		5cm
	B Focus Position	1.5cm	2.0cm		1.0cm		2.0cm
	SV Position	1.0cm	4.5cm		4.0cm		4.5cm
	B Working Frequency	HGen	HGen		Res		HGen
	PW Working Frequency	Pen	Gen		Pen		Gen
	B PRF	1277	1277		896		1277
	PW PRF	4640	4640		4837		4640
	PW SV	0.5mm	0.5mm		0.5mm		0.5mm

Transducer Model: L12-4s

Imaging Mode: Color+B-Mode / Power+B-Mode

Index label		MI	TIS		TIB		TIC
			At surface	Below surface	At surface	Below surface	
Maximum index value		1.26	0.30		0.29		1.39
Index component value			0.30	0.30	0.29	0.29	
Acoustic Parameters	$p_{r,\alpha}$ at z_{MI} (MPa)	2.72					
	P (mW)		31.65		28.96		71.14
	$P_{1\times1}$ (mW)		12.16		11.79		
	z_s (cm)			/			
	z_b (cm)					/	
	z_{MI} (cm)	1.06					
	$z_{pii,\alpha}$ (cm)	1.06					
	f_{awf} (MHz)	4.67	5.73		5.73		5.74
Other Information	prr (Hz)	8,842.00					
	srr (Hz)	26.00					
	n_{pps}	39.00					
	$I_{pa,\alpha}$ at $z_{pii,\alpha}$ (W/cm^2)	300.42					
	$I_{spta,\alpha}$ at $z_{pii,\alpha}$ or $z_{sii,\alpha}$ (mW/cm^2)	15.21					
	I_{spta} at z_{pii} or z_{sii} (mW/cm^2)	21.79					
	p_r at z_{pii} (MPa)	2.94					
Operating control conditions	Acoustic power	100%	100%		100%		100%
	Display depth	5cm	5cm		5cm		5cm
	B Focus Position	1.0cm	1.0cm		1.0cm		1.0cm
	Color Sampling Gate Position	1.0cm	2.5cm		2.5cm		2.5cm
	B Working Frequency	Pen	Pen		Pen		Pen
	C Working Frequency	Pen	Gen		Gen		Gen
	B PRF	3269	3560		3560		3560
	Color PRF	8842	9629		9629		9629

Transducer Model: L12-4s

Imaging Mode: Color+B+PW-Mode/Power+B+PW-Mode

Index label		MI	TIS		TIB		TIC
			At surface	Below surface	At surface	Below surface	
Maximum index value		1.20	0.63		1.30		1.46
Index component value			0.63	0.53	0.68	1.30	
Acoustic Parameters	$p_{r,\alpha}$ at z_{MI} (MPa)	2.90					
	P (mW)		41.70		41.60		50.42
	$P_{1\times1}$ (mW)		24.32		28.24		
	z_s (cm)			1.06			
	z_b (cm)					1.18	
	z_{MI} (cm)	1.21					
	$z_{pii,\alpha}$ (cm)	1.21					
	f_{awf} (MHz)	5.85	8.22		5.16		8.39
Other Information	prr (Hz)	633.00					
	srr (Hz)	10.00					
	n_{pps}	2.24					
	$I_{pa,\alpha}$ at $z_{pii,\alpha}$ (W/cm^2)	510.80					
	$I_{spta,\alpha}$ at $z_{pii,\alpha}$ or $z_{sii,\alpha}$ (mW/cm^2)	4.67					
	I_{spta} at z_{pii} or z_{sii} (mW/cm^2)	7.66					
	p_r at z_{pii} (MPa)	3.51					
Operating control conditions	Acoustic power	100%	100%		100%		100%
	Display depth	5cm	5cm		5cm		5cm
	B Focus Position	1.0cm	4.5cm		4.0cm		3.5cm
	Color SG Position	1.0cm	4.5cm		4.0cm		3.5cm
	PW SV Position	1.0cm	4.5cm		4.0cm		3.5cm
	B Working Frequency	Pen	Res		HPen		Res
	C Working Frequency	Pen	Gen		Gen		Gen
	PW Working Frequency	Pen	Gen		Gen		Gen
	B PRF	633	466		713		466
	C PRF	1541	1521		1164		1521
	PW PRF	4265	4143		4230		4143
	PW SV	0.5mm	0.5mm		0.5mm		0.5mm

J.6 L14-5sp

T Transducer Model: L14-5sp

Imaging Mode: M-mode

Index label		MI	TIS		TIB		TIC
			At surface	Below surface	At surface	Below surface	
Maximum index value		1.22	0.10		0.24		0.16
Index component value			0.10	0.08	0.24	0.20	
Acoustic Parameters	$p_{r,\alpha}$ at z_{MI} (MPa)	2.93					
	P (mW)		5.24		5.24		5.24
	$P_{1\times1}$ (mW)		3.64		5.24		
	z_s (cm)			1.33			
	z_b (cm)					1.44	
	z_{MI} (cm)	1.36					
	$z_{pii,\alpha}$ (cm)	1.36					
	f_{awf} (MHz)	5.82	5.65		5.65		5.65
Other Information	prr (Hz)	3,000.00					
	srr (Hz)	/					
	n_{pps}	/					
	$I_{pa,\alpha}$ at $z_{pii,\alpha}$ (W/cm^2)	260.70					
	$I_{spta,\alpha}$ at $z_{pii,\alpha}$ or $z_{sii,\alpha}$ (mW/cm^2)	195.33					
	I_{spta} at z_{pii} or z_{sii} (mW/cm^2)	337.98					
	p_r at z_{pii} (MPa)	3.86					
Operating control conditions	Acoustic power	100%	100%		100%		100%
	Display depth	15cm	15cm		15cm		15cm
	Focus position	1.5cm	4.5cm		1.5cm		4.5cm
	Working Frequency	HGen	HGen		HGen		HGen
	PRF	3000	3000		3000		3000

Transducer Model: L14-5sp

Imaging Mode: B-mode

Index label		MI	TIS		TIB		TIC
			At surface	Below surface	At surface	Below surface	
Maximum index value		1.08	0.04		0.09		0.10
Index component value			0.04	0.04	0.09	0.06	
Acoustic Parameters	$p_{r,\alpha}$ at z_{MI} (MPa)	2.61					
	P (mW)		3.20		4.60		5.30
	$P_{1\times1}$ (mW)		0.83		1.19		
	z_s (cm)			/			
	z_b (cm)					/	
	z_{MI} (cm)	1.36					
	$z_{pii,\alpha}$ (cm)	1.36					
	f_{awf} (MHz)	5.87	9.88		9.88		9.88
Other Information	*prr* (Hz)	4,228.00					
	srr (Hz)	8.00					
	n_{pps}	2.00					
	$I_{pa,\alpha}$ at $z_{pii,\alpha}$ (W/cm^2)	240.17					
	$I_{spta,\alpha}$ at $z_{pii,\alpha}$ or $z_{sii,\alpha}$ (mW/cm^2)	1.75					
	I_{spta} at z_{pii} or z_{sii} (mW/cm^2)	3.07					
	p_r at z_{pii} (MPa)	3.35					
Operating control conditions	Acoustic power	100%	100%		100%		100%
	Display depth	15cm	15cm		3cm		15cm
	Focus position	1.5cm	5.0cm		1.0cm		5.0cm
	Working Frequency	HGen	Res		Res		Res
	PRF	4228	12000		11997		12000

Transducer Model: L14-5sp

Imaging Mode: B+M-mode

Index label		MI	TIS		TIB		TIC
			At surface	Below surface	At surface	Below surface	
Maximum index value		0.92	0.05		0.07		0.11
Index component value			0.05	0.05	0.06	0.07	
Acoustic Parameters	$p_{r,\alpha}$ at z_{MI} (MPa)	2.21					
	P (mW)		4.15		4.55		5.35
	$P_{1\times1}$ (mW)		1.16		1.36		
	z_s (cm)			1.44			
	z_b (cm)					1.00	
	z_{MI} (cm)	1.36					
	$z_{pii,\alpha}$ (cm)	1.36					
	f_{awf} (MHz)	5.72	9.90		9.90		9.90
Other Information	prr (Hz)	375.00					
	srr (Hz)	7.00					
	n_{pps}	/					
	$I_{pa,\alpha}$ at $z_{pii,\alpha}$ (W/cm^2)	187.98					
	$I_{spta,\alpha}$ at $z_{pii,\alpha}$ or $z_{sii,\alpha}$ (mW/cm^2)	18.08					
	I_{spta} at z_{pii} or z_{sii} (mW/cm^2)	31.00					
	p_r at z_{pii} (MPa)	2.89					
Operating control conditions	Acoustic power	100%	100%		100%		100%
	Display depth	15cm	15cm		3cm		3cm
	B/M Focus position	1.5cm	5.0cm		1.0cm		1.0cm
	B/M Working Frequency	HGen	Res		HGen		HGen
	B PRF	3750	2000		6000		6000
	M PRF	375	1000		3000		3000

Transducer Model: L14-5sp

Imaging Mode: PW-mode

Index label		MI	TIS		TIB		TIC
			At surface	Below surface	At surface	Below surface	
Maximum index value		1.11	0.28		1.03		0.45
Index component value			0.28	0.19	0.49	1.03	
Acoustic Parameters	$p_{r,\alpha}$ at z_{MI} (MPa)	2.65					
	P (mW)		11.18		11.18		11.18
	$P_{1\times1}$ (mW)		9.01		11.18		
	z_s (cm)			1.33			
	z_b (cm)					1.11	
	z_{MI} (cm)	0.88					
	$z_{pii,\alpha}$ (cm)	0.88					
	f_{awf} (MHz)	5.72	6.57		6.57		6.57
Other Information	prr (Hz)	699.00					
	srr (Hz)	/					
	n_{pps}	/					
	$I_{pa,\alpha}$ at $z_{pii,\alpha}$ (W/cm^2)	292.77					
	$I_{spta,\alpha}$ at $z_{pii,\alpha}$ or $z_{sii,\alpha}$ (mW/cm^2)	123.67					
	I_{spta} at z_{pii} or z_{sii} (mW/cm^2)	181.31					
	p_r at z_{pii} (MPa)	2.88					
Operating control conditions	Acoustic power	100%	100%		100%		100%
	Display depth	3cm	15cm		15cm		15cm
	SV Position	1.0cm	5.0cm		2.0cm		2.5cm
	Working Frequency	Gen	Res		Res		Res
	PRF	699	5699		17993		5699
	SV	0.5mm	0.5mm		0.5mm		0.5mm

Transducer Model: L14-5sp

Imaging Mode: B+PW-mode

Index label		MI	TIS		TIB		TIC
			At surface	Below surface	At surface	Below surface	
Maximum index value		1.06	0.43		0.56		0.51
Index component value			0.43	0.35	0.37	0.56	
Acoustic Parameters	$p_{r,\alpha}$ at z_{MI} (MPa)	2.53					
	P (mW)		14.03		14.43		15.53
	$P_{1\times1}$ (mW)		12.03		11.39		
	z_s (cm)			1.33			
	z_b (cm)					1.11	
	z_{MI} (cm)	0.88					
	$z_{pii,\alpha}$ (cm)	0.88					
	f_{awf} (MHz)	5.71	9.85		9.85		9.85
Other Information	prr (Hz)	699.00					
	srr (Hz)	87.00					
	n_{pps}	/					
	$I_{pa,\alpha}$ at $z_{pii,\alpha}$ (W/cm^2)	258.30					
	$I_{spta,\alpha}$ at $z_{pii,\alpha}$ or $z_{sii,\alpha}$ (mW/cm^2)	109.12					
	I_{spta} at z_{pii} or z_{sii} (mW/cm^2)	161.23					
	p_r at z_{pii} (MPa)	2.78					
Operating control conditions	Acoustic power	100%	100%		100%		100%
	Display depth	3cm	15cm		15cm		15cm
	B Focus Position	1.0cm	5.0cm		2.0cm		2.5cm
	SV Position	1.0cm	5.0cm		2.0cm		2.5cm
	B Working Frequency	Pen	Res		Res		HRes
	PW Working Frequency	Gen	Res		Res		Res
	B PRF	11199	239		528		522
	PW PRF	699	5369		4989		4988
	PW SV	0.5mm	0.5mm		0.5mm		0.5mm

Transducer Model: L14-5sp

Imaging Mode: Color+B-Mode / Power+B-Mode

Index label		MI	TIS		TIB		TIC
			At surface	Below surface	At surface	Below surface	
Maximum index value		1.21	0.10		0.11		0.23
Index component value			0.10	0.10	0.11	0.11	
Acoustic Parameters	$p_{r,\alpha}$ at z_{MI} (MPa)	2.91					
	P (mW)		11.40		12.70		12.00
	$P_{1\times1}$ (mW)		2.97		3.31		
	z_s (cm)			/			
	z_b (cm)					/	
	z_{MI} (cm)	0.98					
	$z_{pii,\alpha}$ (cm)	0.98					
	f_{awf} (MHz)	5.75	9.83		9.83		9.83
Other Information	prr (Hz)	1,063.00					
	srr (Hz)	10.00					
	n_{pps}	39.00					
	$I_{pa,\alpha}$ at $z_{pii,\alpha}$ (W/cm^2)	415.40					
	$I_{spta,\alpha}$ at $z_{pii,\alpha}$ or $z_{sii,\alpha}$ (mW/cm^2)	5.59					
	I_{spta} at z_{pii} or z_{sii} (mW/cm^2)	8.32					
	p_r at z_{pii} (MPa)	3.35					
Operating control conditions	Acoustic power	100%	100%		100%		100%
	Display depth	3cm	15cm		15cm		15cm
	B Focus Position	1.0cm	5.0cm		2.5cm		2.5cm
	Color Sampling Gate Position	1.0cm	5.0cm		2.5cm		2.5cm
	B Working Frequency	Pen	Res		Res		Res
	C Working Frequency	Gen	Res		Gen		Gen
	B PRF	1248	1003		846		846
	Color PRF	1063	6734		5936		5936

Transducer Model: L14-5sp

Imaging Mode: Color+B+PW-Mode/Power+B+PW-Mode

Index label		MI	TIS		TIB		TIC
			At surface	Below surface	At surface	Below surface	
Maximum index value		0.75	0.37		0.78		0.63
Index component value			0.37	0.26	0.39	0.78	
Acoustic Parameters	$p_{r,\alpha}$ at z_{MI} (MPa)	1.80					
	P (mW)		18.37		21.37		20.97
	$P_{1\times1}$ (mW)		11.86		12.64		
	z_s (cm)			1.00			
	z_b (cm)					2.00	
	z_{MI} (cm)	0.98					
	$z_{pii,\alpha}$ (cm)	0.98					
	f_{awf} (MHz)	5.82	6.64		6.64		6.64
Other Information	prr (Hz)	1,405.00					
	srr (Hz)	4.00					
	n_{pps}	10.14					
	$I_{pa,\alpha}$ at $z_{pii,\alpha}$ (W/cm^2)	141.92					
	$I_{spta,\alpha}$ at $z_{pii,\alpha}$ or $z_{sii,\alpha}$ (mW/cm^2)	0.74					
	I_{spta} at z_{pii} or z_{sii} (mW/cm^2)	1.10					
	p_r at z_{pii} (MPa)	2.20					
Operating control conditions	Acoustic power	100%	100%		100%		100%
	Display depth	3cm	15cm		15cm		15cm
	B Focus Position	1.0cm	2.5cm		2.0cm		2.0cm
	Color SG Position	1.0cm	2.5cm		2.0cm		2.0cm
	PW SV Position	1.0cm	2.5cm		2.0cm		2.0cm
	B Working Frequency	Gen	HRes		HRes		HGen
	C Working Frequency	Gen	Res		Res		Res
	PW Working Frequency	Pen	Res		Res		Res
	B PRF	437	402		452		452
	C PRF	1405	423		474		474
	PW PRF	4941	4906		4901		4901
	PW SV	0.5mm	0.5mm		0.5mm		0.5mm

J.7 L14-6Ns

Transducer Model: L14-6Ns

Imaging Mode: M-mode

Index label		MI	TIS		TIB		TIC
			At surface	Below surface	At surface	Below surface	
Maximum index value		1.34	0.10		0.36		0.20
Index component value			0.09	0.10	0.36	0.20	
Acoustic Parameters	$p_{r,\alpha}$ at z_{MI} (MPa)	3.24					
	P (mW)		6.19		6.19		6.19
	$P_{1\times1}$ (mW)		3.52		6.19		
	z_s (cm)			1.36			
	z_b (cm)					1.02	
	z_{MI} (cm)	0.80					
	$z_{pii,\alpha}$ (cm)	0.80					
	f_{awf} (MHz)	5.90	5.52		5.52		5.52
Other Information	prr (Hz)	3,000.00					
	srr (Hz)	/					
	n_{pps}	/					
	$I_{pa,\alpha}$ at $z_{pii,\alpha}$ (W/cm^2)	417.96					
	$I_{spta,\alpha}$ at $z_{pii,\alpha}$ or $z_{sii,\alpha}$ (mW/cm^2)	395.98					
	I_{spta} at z_{pii} or z_{sii} (mW/cm^2)	552.91					
	p_r at z_{pii} (MPa)	3.61					
Operating control conditions	Acoustic power	100%	100%		100%		100%
	Display depth	3cm	15cm		3cm		15cm
	Focus position	1.0cm	5.5cm		1.0cm		5.0cm
	Working Frequency	HGen	HGen		HGen		HGen
	PRF	3000	3000		3000		3000

Transducer Model: L14-6Ns

Imaging Mode: B-mode

Index label		MI	TIS		TIB		TIC
			At surface	Below surface	At surface	Below surface	
Maximum index value		0.96	0.10		0.19		0.19
Index component value			0.10	0.10	0.19	0.10	
Acoustic Parameters	$p_{r,\alpha}$ at z_{MI} (MPa)	2.30					
	P (mW)		9.00		9.00		9.00
	$P_{1\times1}$ (mW)		2.33		2.33		
	z_s (cm)			/			
	z_b (cm)					/	
	z_{MI} (cm)	0.51					
	$z_{pii,\alpha}$ (cm)	0.51					
	f_{awf} (MHz)	5.80	8.64		8.64		8.64
Other Information	prr (Hz)	11,997.00					
	srr (Hz)	32.00					
	n_{pps}	2.00					
	$I_{pa,\alpha}$ at $z_{pii,\alpha}$ (W/cm^2)	160.08					
	$I_{spta,\alpha}$ at $z_{pii,\alpha}$ or $z_{sii,\alpha}$ (mW/cm^2)	4.74					
	I_{spta} at z_{pii} or z_{sii} (mW/cm^2)	5.90					
	p_r at z_{pii} (MPa)	2.55					
Operating control conditions	Acoustic power	100%	100%		100%		100%
	Display depth	3cm	3cm		3cm		3cm
	Focus position	1.0cm	1.0cm		1.0cm		1.0cm
	Working Frequency	HGen	Pen		Pen		Pen
	PRF	11997	11997		11997		11997

Transducer Model: L14-6Ns

Imaging Mode: B+M-mode

Index label		MI	TIS		TIB		TIC
			At surface	Below surface	At surface	Below surface	
Maximum index value		1.29	0.11		0.15		0.25
Index component value			0.11	0.11	0.13	0.15	
Acoustic Parameters	$p_{r,\alpha}$ at z_{MI} (MPa)	3.12					
	P (mW)		10.86		10.86		10.86
	$P_{1\times1}$ (mW)		2.93		3.30		
	z_s (cm)			1.53			
	z_b (cm)					0.76	
	z_{MI} (cm)	0.85					
	$z_{pii,\alpha}$ (cm)	0.85					
	f_{awf} (MHz)	5.89	8.20		8.20		8.20
Other Information	*prr* (Hz)	6,000.00					
	srr (Hz)	16.00					
	n_{pps}	2.00					
	$I_{pa,\alpha}$ at $z_{pii,\alpha}$ (W/cm^2)	416.75					
	$I_{spta,\alpha}$ at $z_{pii,\alpha}$ or $z_{sii,\alpha}$ (mW/cm^2)	6.33					
	I_{spta} at z_{pii} or z_{sii} (mW/cm^2)	8.95					
	p_r at z_{pii} (MPa)	3.71					
Operating control conditions	Acoustic power	100%	100%		100%		100%
	Display depth	3cm	15cm		3cm		3cm
	B/M Focus position	1.0cm	7.0cm		1.0cm		1.0cm
	B/M Working Frequency	HGen	Gen		HGen		HGen
	B PRF	6000	2000		6000		6000
	M PRF	3000	1000		3000		3000

Transducer Model: L14-6Ns

Imaging Mode: PW-mode

Index label		MI	TIS		TIB		TIC
			At surface	Below surface	At surface	Below surface	
Maximum index value		0.73	0.21		0.55		0.67
Index component value			0.21	0.14	0.42	0.55	
Acoustic Parameters	$p_{r,\alpha}$ at z_{MI} (MPa)	1.75					
	P (mW)		6.63		6.63		6.63
	$P_{1\times1}$ (mW)		6.63		6.63		
	z_s (cm)			0.84			
	z_b (cm)					0.93	
	z_{MI} (cm)	1.02					
	$z_{pii,\alpha}$ (cm)	1.02					
	f_{awf} (MHz)	5.71	6.68		6.68		6.68
Other Information	*prr* (Hz)	699.00					
	srr (Hz)	/					
	n_{pps}	/					
	$I_{pa,\alpha}$ at $z_{pii,\alpha}$ (W/cm^2)	155.11					
	$I_{spta,\alpha}$ at $z_{pii,\alpha}$ or $z_{sii,\alpha}$ (mW/cm^2)	68.92					
	I_{spta} at z_{pii} or z_{sii} (mW/cm^2)	103.13					
	p_r at z_{pii} (MPa)	2.15					
Operating control conditions	Acoustic power	100%	100%		100%		100%
	Display depth	3cm	15cm		15cm		3cm
	SV Position	1.0cm	3.0cm		1.5cm		0.5cm
	Working Frequency	Gen	Res		Res		Res
	PRF	699	13995		20000		23995
	SV	0.5mm	0.5mm		0.5mm		0.5mm

Transducer Model: L14-6Ns

Imaging Mode: B+PW-mode

Index label		MI	TIS		TIB		TIC
			At surface	Below surface	At surface	Below surface	
Maximum index value		1.20	0.23		0.46		0.46
Index component value			0.23	0.17	0.23	0.46	
Acoustic Parameters	$p_{r,\alpha}$ at z_{MI} (MPa)	2.88					
	P (mW)		9.59		9.59		9.59
	$P_{1\times1}$ (mW)		6.91		6.91		
	z_s (cm)			0.84			
	z_b (cm)					1.02	
	z_{MI} (cm)	0.68					
	$z_{pii,\alpha}$ (cm)	0.68					
	f_{awf} (MHz)	5.75	10.01		10.01		10.01
Other Information	prr (Hz)	699.00					
	srr (Hz)	49.00					
	n_{pps}	/					
	$I_{pa,\alpha}$ at $z_{pii,\alpha}$ (W/cm^2)	391.48					
	$I_{spta,\alpha}$ at $z_{pii,\alpha}$ or $z_{sii,\alpha}$ (mW/cm^2)	171.05					
	I_{spta} at z_{pii} or z_{sii} (mW/cm^2)	225.72					
	p_r at z_{pii} (MPa)	3.19					
Operating control conditions	Acoustic power	100%	100%		100%		100%
	Display depth	15cm	15cm		15cm		15cm
	B Focus Position	1.0cm	3.0cm		1.5cm		1.5cm
	SV Position	1.0cm	3.0cm		1.5cm		1.5cm
	B Working Frequency	Gen	Res		Res		Res
	PW Working Frequency	Gen	Res		Res		Res
	B PRF	3499	523		519		523
	PW PRF	699	4987		4989		4987
	PW SV	0.5mm	0.5mm		0.5mm		0.5mm

Transducer Model: L14-6Ns

Imaging Mode: Color+B-Mode / Power+B-Mode

Index label		MI	TIS		TIB		TIC
			At surface	Below surface	At surface	Below surface	
Maximum index value		1.25	0.17		0.17		0.46
Index component value			0.17	0.17	0.17	0.17	
Acoustic Parameters	$p_{r,\alpha}$ at z_{MI} (MPa)	2.82					
	P (mW)		22.30		22.30		22.30
	$P_{1\times1}$ (mW)		5.70		5.70		
	z_s (cm)			/			
	z_b (cm)					/	
	z_{MI} (cm)	0.74					
	$z_{pii,\alpha}$ (cm)	0.74					
	f_{awf} (MHz)	5.06	9.57		9.57		9.57
Other Information	prr (Hz)	5,883.00					
	srr (Hz)	9.00					
	n_{pps}	39.00					
	$I_{pa,\alpha}$ at $z_{pii,\alpha}$ (W/cm^2)	268.34					
	$I_{spta,\alpha}$ at $z_{pii,\alpha}$ or $z_{sii,\alpha}$ (mW/cm^2)	5.30					
	I_{spta} at z_{pii} or z_{sii} (mW/cm^2)	6.94					
	p_r at z_{pii} (MPa)	3.16					
Operating control conditions	Acoustic power	100%	100%		100%		100%
	Display depth	3cm	15cm		15cm		15cm
	B Focus Position	1.0cm	1.5cm		1.5cm		1.5cm
	Color Sampling Gate Position	1.0cm	1.5cm		1.5cm		1.5cm
	B Working Frequency	Pen	Gen		Gen		Gen
	C Working Frequency	Pen	Gen		Gen		Gen
	B PRF	905	1463		1463		1463
	Color PRF	5883	9734		9734		9734

Transducer Model: L14-6Ns

Imaging Mode: Color+B+PW-Mode/Power+B+PW-Mode

Index label		MI	TIS		TIB		TIC
			At surface	Below surface	At surface	Below surface	
Maximum index value		0.81	0.56		0.76		1.32
Index component value			0.56	0.50	0.56	0.76	
Acoustic Parameters	$p_{r,\alpha}$ at z_{MI} (MPa)	2.36					
	P (mW)		21.72		21.72		21.72
	$P_{1\times1}$ (mW)		17.69		17.69		
	z_s (cm)			0.84			
	z_b (cm)					1.02	
	z_{MI} (cm)	0.68					
	$z_{pii,\alpha}$ (cm)	0.68					
	f_{awf} (MHz)	8.41	9.84		9.84		9.84
Other Information	prr (Hz)	295.00					
	srr (Hz)	5.00					
	n_{pps}	2.24					
	$I_{pa,\alpha}$ at $z_{pii,\alpha}$ (W/cm^2)	171.20					
	$I_{spta,\alpha}$ at $z_{pii,\alpha}$ or $z_{sii,\alpha}$ (mW/cm^2)	0.53					
	I_{spta} at z_{pii} or z_{sii} (mW/cm^2)	0.90					
	p_r at z_{pii} (MPa)	2.51					
Operating control conditions	Acoustic power	100%	100%		100%		100%
	Display depth	15cm	15cm		15cm		15cm
	B Focus Position	1.0cm	3.0cm		1.5cm		0.5cm
	Color SG Position	1.0cm	3.0cm		1.5cm		0.5cm
	PW SV Position	1.0cm	3.0cm		1.5cm		0.5cm
	B Working Frequency	Pen	Res		Res		Res
	C Working Frequency	Pen	Res		Res		Res
	PW Working Frequency	Pen	Res		Res		Res
	B PRF	295	453		453		453
	C PRF	242	121		121		121
	PW PRF	4895	4908		4908		4908
	PW SV	0.5mm	0.5mm		0.5mm		0.5mm

J.8 L14-6s

Transducer Model: L14-6s

Imaging Mode: M-mode

Index label		MI	TIS		TIB		TIC
			At surface	Below surface	At surface	Below surface	
Maximum index value		1.41	0.09		0.23		0.13
Index component value			0.09	0.07	0.23	0.20	
Acoustic Parameters	$p_{r,\alpha}$ at z_{MI} (MPa)	4.09					
	P (mW)		3.67		3.67		3.67
	$P_{1\times1}$ (mW)		3.01		3.67		
	z_s (cm)			1.22			
	z_b (cm)					1.00	
	z_{MI} (cm)	0.60					
	$z_{pii,\alpha}$ (cm)	0.60					
	f_{awf} (MHz)	8.45	6.41		6.41		6.41
Other Information	prr (Hz)	1,000.00					
	srr (Hz)	/					
	n_{pps}	/					
	$I_{pa,\alpha}$ at $z_{pii,\alpha}$ (W/cm^2)	226.51					
	$I_{spta,\alpha}$ at $z_{pii,\alpha}$ or $z_{sii,\alpha}$ (mW/cm^2)	51.22					
	I_{spta} at z_{pii} or z_{sii} (mW/cm^2)	72.54					
	p_r at z_{pii} (MPa)	4.87					
Operating control conditions	Acoustic power	100%	100%		100%		100%
	Display depth	3cm	15cm		3cm		15cm
	Focus position	1.0cm	5.0cm		1.0cm		5.0cm
	Working Frequency	Pen	HRes		HGen		HRes
	PRF	1000	3000		3000		3000

Transducer Model: L14-6s

Imaging Mode: B-mode

Index label		MI	TIS		TIB		TIC
			At surface	Below surface	At surface	Below surface	
Maximum index value		1.30	0.07		0.16		0.13
Index component value			0.07	0.07	0.16	0.07	
Acoustic Parameters	$p_{r,\alpha}$ at z_{MI} (MPa)	3.74					
	P (mW)		8.40		9.20		7.50
	$P_{1\times1}$ (mW)		1.63		1.78		
	z_s (cm)			/			
	z_b (cm)					/	
	z_{MI} (cm)	0.88					
	$z_{pii,\alpha}$ (cm)	0.88					
	f_{awf} (MHz)	8.27	8.68		8.68		8.68
Other Information	*prr* (Hz)	11,997.00					
	srr (Hz)	92.00					
	n_{pps}	2.00					
	$I_{pa,\alpha}$ at $z_{pii,\alpha}$ (W/cm^2)	422.59					
	$I_{spta,\alpha}$ at $z_{pii,\alpha}$ or $z_{sii,\alpha}$ (mW/cm^2)	30.93					
	I_{spta} at z_{pii} or z_{sii} (mW/cm^2)	51.24					
	p_r at z_{pii} (MPa)	4.81					
Operating control conditions	Acoustic power	100%	100%		100%		100%
	Display depth	3cm	15cm		15cm		15cm
	Focus position	1.0cm	5.0cm		5.0cm		5.0cm
	Working Frequency	Pen	Res		Res		Pen
	PRF	11997	4247		4247		4247

Transducer Model: L14-6s

Imaging Mode: B+M-mode

Index label		MI	TIS		TIB		TIC
			At surface	Below surface	At surface	Below surface	
Maximum index value		1.19	0.28		0.51		0.68
Index component value			0.28	0.24	0.36	0.51	
Acoustic Parameters	$p_{r,\alpha}$ at z_{MI} (MPa)	3.42					
	P (mW)		24.85		26.35		27.25
	$P_{1\times1}$ (mW)		6.87		8.94		
	z_s (cm)			1.33			
	z_b (cm)					1.00	
	z_{MI} (cm)	0.88					
	$z_{pii,\alpha}$ (cm)	0.88					
	f_{awf} (MHz)	8.27	8.51		8.51		8.51
Other Information	*prr* (Hz)	9,000.00					
	srr (Hz)	66.00					
	n_{pps}	2.00					
	$I_{pa,\alpha}$ at $z_{pii,\alpha}$ (W/cm^2)	385.14					
	$I_{spta,\alpha}$ at $z_{pii,\alpha}$ or $z_{sii,\alpha}$ (mW/cm^2)	20.53					
	I_{spta} at z_{pii} or z_{sii} (mW/cm^2)	34.03					
	p_r at z_{pii} (MPa)	4.40					
Operating control conditions	Acoustic power	100%	100%		100%		100%
	Display depth	3cm	15cm		3cm		3cm
	B/M Focus position	1.0cm	5.0cm		1.0cm		1.0cm
	B/M Working Frequency	Pen	Pen		HGen		Pen
	B PRF	9000	2000		6000		9000
	M PRF	1000	1000		3000		1000

Transducer Model: L14-6s

Imaging Mode: PW-mode

Index label		MI	TIS		TIB		TIC
			At surface	Below surface	At surface	Below surface	
Maximum index value		1.20	0.32		0.86		0.48
Index component value			0.32	0.21	0.48	0.86	
Acoustic Parameters	$p_{r,\alpha}$ at z_{MI} (MPa)	3.11					
	P (mW)		10.06		10.06		10.06
	$P_{1\times1}$ (mW)		10.06		10.06		
	z_s (cm)			0.88			
	z_b (cm)					1.65	
	z_{MI} (cm)	0.69					
	$z_{pii,\alpha}$ (cm)	0.69					
	f_{awf} (MHz)	6.70	6.77		6.77		6.77
Other Information	prr (Hz)	699.00					
	srr (Hz)	/					
	n_{pps}	/					
	$I_{pa,\alpha}$ at $z_{pii,\alpha}$ (W/cm^2)	346.82					
	$I_{spta,\alpha}$ at $z_{pii,\alpha}$ or $z_{sii,\alpha}$ (mW/cm^2)	173.84					
	I_{spta} at z_{pii} or z_{sii} (mW/cm^2)	262.89					
	p_r at z_{pii} (MPa)	3.36					
Operating control conditions	Acoustic power	100%	100%		100%		100%
	Display depth	3cm	15cm		15cm		15cm
	SV Position	1.0cm	2.0cm		2.0cm		2.0cm
	Working Frequency	Res	Res		Res		Res
	PRF	699	17993		17993		17993
	SV	0.5mm	0.5mm		0.5mm		0.5mm

Transducer Model: L14-6s

Imaging Mode: B+PW-mode

Index label		MI	TIS		TIB		TIC
			At surface	Below surface	At surface	Below surface	
Maximum index value		1.29	0.36		0.91		0.60
Index component value			0.36	0.26	0.36	0.91	
Acoustic Parameters	$p_{r,\alpha}$ at z_{MI} (MPa)	3.35					
	P (mW)		17.69		18.29		18.59
	$P_{1\times1}$ (mW)		10.74		10.85		
	z_s (cm)			0.88			
	z_b (cm)					0.88	
	z_{MI} (cm)	0.88					
	$z_{pii,\alpha}$ (cm)	0.88					
	f_{awf} (MHz)	6.73	8.02		8.02		8.02
Other Information	prr (Hz)	699.00					
	srr (Hz)	174.00					
	n_{pps}	/					
	$I_{pa,\alpha}$ at $z_{pii,\alpha}$ (W/cm^2)	505.23					
	$I_{spta,\alpha}$ at $z_{pii,\alpha}$ or $z_{sii,\alpha}$ (mW/cm^2)	247.57					
	I_{spta} at z_{pii} or z_{sii} (mW/cm^2)	373.37					
	p_r at z_{pii} (MPa)	4.11					
Operating control conditions	Acoustic power	100%	100%		100%		100%
	Display depth	3cm	15cm		15cm		15cm
	B Focus Position	1.0cm	2.0cm		2.0cm		2.0cm
	SV Position	1.0cm	2.0cm		2.0cm		2.0cm
	B Working Frequency	Pen	Pen		HRes		HRes
	PW Working Frequency	Res	Res		Res		Res
	B PRF	11199	519		522		522
	PW PRF	699	4989		4988		4988
	PW SV	0.5mm	0.5mm		0.5mm		0.5mm

Transducer Model: L14-6s

Imaging Mode: Color+B-Mode / Power+B-Mode

Index label		MI	TIS		TIB		TIC
			At surface	Below surface	At surface	Below surface	
Maximum index value		1.39	0.13		0.13		0.31
Index component value			0.13	0.13	0.13	0.13	
Acoustic Parameters	$p_{r,\alpha}$ at z_{MI} (MPa)	3.41					
	P (mW)		15.70		16.00		17.30
	$P_{1\times1}$ (mW)		3.06		3.12		
	z_s (cm)			/			
	z_b (cm)					/	
	z_{MI} (cm)	0.88					
	$z_{pii,\alpha}$ (cm)	0.88					
	f_{awf} (MHz)	6.06	10.35		10.35		10.35
Other Information	prr (Hz)	640.00					
	srr (Hz)	10.00					
	n_{pps}	39.00					
	$I_{pa,\alpha}$ at $z_{pii,\alpha}$ (W/cm^2)	482.60					
	$I_{spta,\alpha}$ at $z_{pii,\alpha}$ or $z_{sii,\alpha}$ (mW/cm^2)	7.28					
	I_{spta} at z_{pii} or z_{sii} (mW/cm^2)	10.54					
	p_r at z_{pii} (MPa)	4.10					
Operating control conditions	Acoustic power	100%	100%		100%		100%
	Display depth	15cm	15cm		15cm		15cm
	B Focus Position	1.0cm	5.0cm		5.0cm		5.0cm
	Color Sampling Gate Position	1.0cm	5.0cm		5.0cm		5.0cm
	B Working Frequency	HPen	Res		Res		Pen
	C Working Frequency	Gen	Res		Res		Res
	B PRF	3723	1527		1527		1527
	Color PRF	640	6286		6286		6286

Transducer Model: L14-6s

Imaging Mode: Color+B+PW-Mode/Power+B+PW-Mode

Index label		MI	TIS		TIB		TIC
			At surface	Below surface	At surface	Below surface	
Maximum index value		0.97	0.43		1.01		0.80
Index component value			0.43	0.33	0.44	1.01	
Acoustic Parameters	$p_{r,\alpha}$ at z_{MI} (MPa)	2.77					
	P (mW)		16.91		17.91		20.51
	$P_{1\times1}$ (mW)		13.11		13.54		
	z_s (cm)			0.88			
	z_b (cm)					1.56	
	z_{MI} (cm)	0.60					
	$z_{pii,\alpha}$ (cm)	0.60					
	f_{awf} (MHz)	8.10	7.15		7.15		7.15
Other Information	prr (Hz)	278.00					
	srr (Hz)	4.00					
	n_{pps}	2.24					
	$I_{pa,\alpha}$ at $z_{pii,\alpha}$ (W/cm^2)	239.70					
	$I_{spta,\alpha}$ at $z_{pii,\alpha}$ or $z_{sii,\alpha}$ (mW/cm^2)	0.65					
	I_{spta} at z_{pii} or z_{sii} (mW/cm^2)	0.92					
	p_r at z_{pii} (MPa)	2.85					
Operating control conditions	Acoustic power	100%	100%		100%		100%
	Display depth	3cm	15cm		15cm		15cm
	B Focus Position	1.0cm	2.0cm		2.0cm		2.0cm
	Color SG Position	1.0cm	2.0cm		2.0cm		2.0cm
	PW SV Position	1.0cm	2.0cm		2.0cm		2.0cm
	B Working Frequency	Pen	HRes		HRes		HRes
	C Working Frequency	Gen	Res		Res		Res
	PW Working Frequency	Pen	Res		Res		Res
	B PRF	278	506		506		506
	C PRF	1224	92		92		92
	PW PRF	5008	4967		4967		4967
	PW SV	0.5mm	0.5mm		0.5mm		0.5mm

J.9 L16-4Hs

Transducer Model: L16-4Hs

Imaging Mode: M-mode

Index label		MI	TIS		TIB		TIC
			At surface	Below surface	At surface	Below surface	
Maximum index value		1.48	0.13		0.36		0.22
Index component value			0.13	0.11	0.33	0.36	
Acoustic Parameters	$p_{r,\alpha}$ at z_{MI} (MPa)	4.29					
	P (mW)		7.12		7.12		7.12
	$P_{1\times1}$ (mW)		4.45		7.12		
	z_s (cm)			1.44			
	z_b (cm)					1.00	
	z_{MI} (cm)	0.79					
	$z_{pii,\alpha}$ (cm)	0.79					
	f_{awf} (MHz)	8.43	6.30		6.30		6.30
Other Information	*prr* (Hz)	1,000.00					
	srr (Hz)	/					
	n_{pps}	/					
	$I_{pa,\alpha}$ at $z_{pii,\alpha}$ (W/cm^2)	282.42					
	$I_{spta,\alpha}$ at $z_{pii,\alpha}$ or $z_{sii,\alpha}$ (mW/cm^2)	42.66					
	I_{spta} at z_{pii} or z_{sii} (mW/cm^2)	67.49					
	p_r at z_{pii} (MPa)	5.40					
Operating control conditions	Acoustic power	100%	100%		100%		100%
	Display depth	15cm	15cm		15cm		15cm
	Focus position	1.0cm	5.0cm		1.5cm		4.5cm
	Working Frequency	Pen	HGen		HGen		HGen
	PRF	1000	3000		3000		3000

Transducer Model: L16-4Hs

Imaging Mode: B-mode

Index label		MI	TIS		TIB		TIC
			At surface	Below surface	At surface	Below surface	
Maximum index value		1.27	0.09		0.15		0.17
Index component value			0.09	0.09	0.15	0.11	
Acoustic Parameters	$p_{r,\alpha}$ at z_{MI} (MPa)	3.17					
	P (mW)		5.20		6.40		7.10
	$P_{1\times1}$ (mW)		2.02		2.48		
	z_s (cm)			/			
	z_b (cm)					/	
	z_{MI} (cm)	0.88					
	$z_{pii,\alpha}$ (cm)	0.88					
	f_{awf} (MHz)	6.18	9.21		9.21		9.21
Other Information	*prr* (Hz)	4,268.00					
	srr (Hz)	11.00					
	n_{pps}	2.00					
	$I_{pa,\alpha}$ at $z_{pii,\alpha}$ (W/cm^2)	433.27					
	$I_{spta,\alpha}$ at $z_{pii,\alpha}$ or $z_{sii,\alpha}$ (mW/cm^2)	3.92					
	I_{spta} at z_{pii} or z_{sii} (mW/cm^2)	5.72					
	p_r at z_{pii} (MPa)	3.83					
Operating control conditions	Acoustic power	100%	100%		100%		100%
	Display depth	15cm	15cm		15cm		15cm
	Focus position	1.0cm	5.0cm		5.0cm		5.0cm
	Working Frequency	HGen	Pen		HRes		Pen
	PRF	4268	4247		4247		4247

Transducer Model: L16-4Hs

Imaging Mode: B+M-mode

Index label		MI	TIS		TIB		TIC
			At surface	Below surface	At surface	Below surface	
Maximum index value		1.30	0.10		0.12		0.17
Index component value			0.10	0.10	0.12	0.12	
Acoustic Parameters	$p_{r,\alpha}$ at z_{MI} (MPa)	3.24					
	P (mW)		5.43		6.53		7.13
	$P_{1\times1}$ (mW)		2.11		2.54		
	z_s (cm)			1.44			
	z_b (cm)					1.44	
	z_{MI} (cm)	0.88					
	$z_{pii,\alpha}$ (cm)	0.88					
	f_{awf} (MHz)	6.20	10.07		10.07		10.07
Other Information	*prr* (Hz)	3,750.00					
	srr (Hz)	9.00					
	n_{pps}	2.09					
	$I_{pa,\alpha}$ at $z_{pii,\alpha}$ (W/cm^2)	425.86					
	$I_{spta,\alpha}$ at $z_{pii,\alpha}$ or $z_{sii,\alpha}$ (mW/cm^2)	3.16					
	I_{spta} at z_{pii} or z_{sii} (mW/cm^2)	4.62					
	p_r at z_{pii} (MPa)	3.91					
Operating control conditions	Acoustic power	100%	100%		100%		100%
	Display depth	15cm	15cm		15cm		3cm
	B/M Focus position	1.0cm	5.0cm		5.0cm		1.0cm
	B/M Working Frequency	HGen	Gen		HRes		Pen
	B PRF	3750	2000		3750		9000
	M PRF	375	1000		375		1000

Transducer Model: L16-4Hs

Imaging Mode: PW-mode

Index label		MI	TIS		TIB		TIC
			At surface	Below surface	At surface	Below surface	
Maximum index value		1.21	0.20		0.37		0.27
Index component value			0.20	0.13	0.37	0.15	
Acoustic Parameters	$p_{r,\alpha}$ at z_{MI} (MPa)	2.73					
	P (mW)		7.71		7.71		7.71
	$P_{1\times1}$ (mW)		6.22		7.71		
	z_s (cm)			1.33			
	z_b (cm)					1.44	
	z_{MI} (cm)	0.79					
	$z_{pii,\alpha}$ (cm)	0.79					
	f_{awf} (MHz)	5.10	6.67		6.67		6.67
Other Information	prr (Hz)	699.00					
	srr (Hz)	/					
	n_{pps}	/					
	$I_{pa,\alpha}$ at $z_{pii,\alpha}$ (W/cm^2)	279.36					
	$I_{spta,\alpha}$ at $z_{pii,\alpha}$ or $z_{sii,\alpha}$ (mW/cm^2)	145.12					
	I_{spta} at z_{pii} or z_{sii} (mW/cm^2)	193.59					
	p_r at z_{pii} (MPa)	3.14					
Operating control conditions	Acoustic power	100%	100%		100%		100%
	Display depth	3cm	15cm		15cm		15cm
	SV Position	1.0cm	5.0cm		1.5cm		4.0cm
	Working Frequency	Pen	Res		Res		Res
	PRF	699	10397		5699		11997
	SV	0.5mm	0.5mm		0.5mm		0.5mm

Transducer Model: L16-4Hs

Imaging Mode: B+PW-mode

Index label		MI	TIS		TIB		TIC
			At surface	Below surface	At surface	Below surface	
Maximum index value		1.26	0.46		0.56		0.71
Index component value			0.46	0.40	0.56	0.51	
Acoustic Parameters	$p_{r,\alpha}$ at z_{MI} (MPa)	2.85					
	P (mW)		13.29		14.49		15.19
	$P_{1\times1}$ (mW)		11.92		14.49		
	z_s (cm)			1.33			
	z_b (cm)					1.44	
	z_{MI} (cm)	0.79					
	$z_{pii,\alpha}$ (cm)	0.79					
	f_{awf} (MHz)	5.10	9.38		9.38		9.38
Other Information	prr (Hz)	699.00					
	srr (Hz)	49.00					
	n_{pps}	/					
	$I_{pa,\alpha}$ at $z_{pii,\alpha}$ (W/cm^2)	271.59					
	$I_{spta,\alpha}$ at $z_{pii,\alpha}$ or $z_{sii,\alpha}$ (mW/cm^2)	141.42					
	I_{spta} at z_{pii} or z_{sii} (mW/cm^2)	186.62					
	p_r at z_{pii} (MPa)	3.28					
Operating control conditions	Acoustic power	100%	100%		100%		100%
	Display depth	15cm	15cm		15cm		15cm
	B Focus Position	1.0cm	5.0cm		1.5cm		4.0cm
	SV Position	1.0cm	5.0cm		1.5cm		4.0cm
	B Working Frequency	Pen	Pen		Pen		Pen
	PW Working Frequency	Pen	Res		Res		Res
	B PRF	3499	134		134		134
	PW PRF	699	5505		5505		5505
	PW SV	0.5mm	0.5mm		0.5mm		0.5mm

Transducer Model: L16-4Hs

Imaging Mode: Color+B-Mode / Power+B-Mode

Index label		MI	TIS		TIB		TIC
			At surface	Below surface	At surface	Below surface	
Maximum index value		1.44	0.12		0.16		0.30
Index component value			0.12	0.12	0.16	0.16	
Acoustic Parameters	$p_{r,\alpha}$ at z_{MI} (MPa)	3.26					
	P (mW)		8.10		10.00		12.90
	$P_{1\times1}$ (mW)		3.16		4.71		
	z_s (cm)			/			
	z_b (cm)					/	
	z_{MI} (cm)	0.79					
	$z_{pii,\alpha}$ (cm)	0.79					
	f_{awf} (MHz)	5.11	9.26		9.26		9.26
Other Information	prr (Hz)	541.00					
	srr (Hz)	12.00					
	n_{pps}	39.00					
	$I_{pa,\alpha}$ at $z_{pii,\alpha}$ (W/cm^2)	348.22					
	$I_{spta,\alpha}$ at $z_{pii,\alpha}$ or $z_{sii,\alpha}$ (mW/cm^2)	9.25					
	I_{spta} at z_{pii} or z_{sii} (mW/cm^2)	12.21					
	p_r at z_{pii} (MPa)	3.74					
Operating control conditions	Acoustic power	100%	100%		100%		100%
	Display depth	15cm	15cm		15cm		15cm
	B Focus Position	1.0cm	3.5cm		4.5cm		3.5cm
	Color Sampling Gate Position	1.0cm	3.5cm		4.5cm		3.5cm
	B Working Frequency	HPen	Pen		HRes		Pen
	C Working Frequency	Pen	Gen		Gen		Gen
	B PRF	3538	1648		3190		1648
	Color PRF	541	4995		2354		4995

Transducer Model: L16-4Hs

Imaging Mode: Color+B+PW-Mode/Power+B+PW-Mode

Index label		MI	TIS		TIB		TIC
			At surface	Below surface	At surface	Below surface	
Maximum index value		0.96	0.62		0.93		0.96
Index component value			0.62	0.54	0.73	0.93	
Acoustic Parameters	$p_{r,\alpha}$ at z_{MI} (MPa)	2.77					
	P (mW)		18.28		19.68		19.48
	$P_{1\times1}$ (mW)		16.48		19.68		
	z_s (cm)			1.33			
	z_b (cm)					1.00	
	z_{MI} (cm)	0.69					
	$z_{pii,\alpha}$ (cm)	0.69					
	f_{awf} (MHz)	8.27	9.35		9.35		9.35
Other Information	prr (Hz)	315.00					
	srr (Hz)	6.00					
	n_{pps}	1.29					
	$I_{pa,\alpha}$ at $z_{pii,\alpha}$ (W/cm^2)	281.39					
	$I_{spta,\alpha}$ at $z_{pii,\alpha}$ or $z_{sii,\alpha}$ (mW/cm^2)	0.64					
	I_{spta} at z_{pii} or z_{sii} (mW/cm^2)	1.03					
	p_r at z_{pii} (MPa)	3.24					
Operating control conditions	Acoustic power	100%	100%		100%		100%
	Display depth	15cm	15cm		15cm		15cm
	B Focus Position	1.0cm	5.0cm		1.5cm		4.0cm
	Color SG Position	1.0cm	5.0cm		1.5cm		4.0cm
	PW SV Position	1.0cm	5.0cm		1.5cm		4.0cm
	B Working Frequency	Pen	Pen		Pen		Pen
	C Working Frequency	Pen	Res		Res		Res
	PW Working Frequency	Pen	Res		Res		Res
	B PRF	315	107		107		107
	C PRF	208	407		395		407
	PW PRF	5156	5172		5364		5172
	PW SV	0.5mm	0.5mm		0.5mm		0.5mm

J.10 L20-5s

Transducer Model: L20-5s

Imaging Mode: M-mode

Index label		MI	TIS		TIB		TIC
			At surface	Below surface	At surface	Below surface	
Maximum index value		1.00	0.08		0.13		0.13
Index component value			0.08	0.05	0.09	0.13	
Acoustic Parameters	$p_{r,\alpha}$ at z_{MI} (MPa)	2.72					
	P (mW)		1.92		1.92		1.92
	$P_{1\times1}$ (mW)		1.92		1.92		
	z_s (cm)			0.82			
	z_b (cm)					1.75	
	z_{MI} (cm)	1.52					
	$z_{pii,\alpha}$ (cm)	1.52					
	f_{awf} (MHz)	7.33	8.54		8.54		8.54
Other Information	*prr* (Hz)	3,000.00					
	srr (Hz)	/					
	n_{pps}	/					
	$I_{pa,\alpha}$ at $z_{pii,\alpha}$ (W/cm^2)	102.07					
	$I_{spta,\alpha}$ at $z_{pii,\alpha}$ or $z_{sii,\alpha}$ (mW/cm^2)	76.78					
	I_{spta} at z_{pii} or z_{sii} (mW/cm^2)	172.15					
	p_r at z_{pii} (MPa)	3.78					
Operating control conditions	Acoustic power	100%	100%		100%		100%
	Display depth	21cm	21cm		21cm		5cm
	Focus position	1.5cm	1.5cm		1.5cm		0.5cm
	Working Frequency	HPen	HGen		HGen		HGen
	PRF	3000	3000		3000		3000

Transducer Model: L20-5s

Imaging Mode: B-mode

Index label		MI	TIS		TIB		TIC
			At surface	Below surface	At surface	Below surface	
Maximum index value		0.27	0.64		0.83		0.86
Index component value			0.64	0.64	0.83	0.64	
Acoustic Parameters	$p_{r,\alpha}$ at z_{MI} (MPa)	0.92					
	P (mW)		43.00		42.90		44.40
	$P_{1\times1}$ (mW)		14.85		14.82		
	z_s (cm)			/			
	z_b (cm)					/	
	z_{MI} (cm)	1.61					
	$z_{pii,\alpha}$ (cm)	1.61					
	f_{awf} (MHz)	11.92	9.03		9.03		9.03
Other Information	*prr* (Hz)	11,997.00					
	srr (Hz)	74.00					
	n_{pps}	2.00					
	$I_{pa,\alpha}$ at $z_{pii,\alpha}$ (W/cm^2)	24.14					
	$I_{spta,\alpha}$ at $z_{pii,\alpha}$ or $z_{sii,\alpha}$ (mW/cm^2)	0.82					
	I_{spta} at z_{pii} or z_{sii} (mW/cm^2)	3.13					
	p_r at z_{pii} (MPa)	1.70					
Operating control conditions	Acoustic power	100%	100%		100%		100%
	Display depth	5cm	5cm		5cm		5cm
	Focus position	1.0cm	0.5cm		0.5cm		0.5cm
	Working Frequency	Res	HRes		HRes		HRes
	PRF	11997	11997		11997		11997

Transducer Model: L20-5s

Imaging Mode: B+M-mode

Index label		MI	TIS		TIB		TIC
			At surface	Below surface	At surface	Below surface	
Maximum index value		0.50	0.50		0.52		0.72
Index component value			0.50	0.49	0.52	0.49	
Acoustic Parameters	$p_{r,\alpha}$ at z_{MI} (MPa)	1.35					
	P (mW)		34.86		35.66		33.76
	$P_{1\times1}$ (mW)		12.86		13.14		
	z_s (cm)			0.67			
	z_b (cm)					1.17	
	z_{MI} (cm)	1.80					
	$z_{pii,\alpha}$ (cm)	1.80					
	f_{awf} (MHz)	7.30	8.28		8.28		8.28
Other Information	prr (Hz)	375.00					
	srr (Hz)	7.00					
	n_{pps}	/					
	$I_{pa,\alpha}$ at $z_{pii,\alpha}$ (W/cm^2)	65.36					
	$I_{spta,\alpha}$ at $z_{pii,\alpha}$ or $z_{sii,\alpha}$ (mW/cm^2)	6.17					
	I_{spta} at z_{pii} or z_{sii} (mW/cm^2)	15.34					
	p_r at z_{pii} (MPa)	2.13					
Operating control conditions	Acoustic power	100%	100%		100%		100%
	Display depth	21cm	5cm		5cm		5cm
	B/M Focus position	1.5cm	0.5cm		0.5cm		0.5cm
	B/M Working Frequency	HPen	HGen		Gen		HGen
	B PRF	3000	6000		9000		6000
	M PRF	375	3000		1000		3000

Transducer Model: L20-5s

Imaging Mode: PW-mode

Index label		MI	TIS		TIB		TIC
			At surface	Below surface	At surface	Below surface	
Maximum index value		0.97	0.48		0.52		0.42
Index component value			0.48	0.18	0.52	0.52	
Acoustic Parameters	$p_{r,\alpha}$ at z_{MI} (MPa)	2.90					
	P (mW)		7.67		7.67		7.67
	$P_{1\times1}$ (mW)		7.67		7.67		
	z_s (cm)			1.08			
	z_b (cm)					0.89	
	z_{MI} (cm)	0.89					
	$z_{pii,\alpha}$ (cm)	0.89					
	f_{awf} (MHz)	8.97	13.22		13.22		13.22
Other Information	prr (Hz)	699.00					
	srr (Hz)	/					
	n_{pps}	/					
	$I_{pa,\alpha}$ at $z_{pii,\alpha}$ (W/cm^2)	342.19					
	$I_{spta,\alpha}$ at $z_{pii,\alpha}$ or $z_{sii,\alpha}$ (mW/cm^2)	163.06					
	I_{spta} at z_{pii} or z_{sii} (mW/cm^2)	284.75					
	p_r at z_{pii} (MPa)	3.74					
Operating control conditions	Acoustic power	100%	100%		100%		100%
	Display depth	21cm	21cm		5cm		21cm
	SV Position	1.5cm	5.0cm		1.0cm		2.0cm
	Working Frequency	Pen	Res		Pen		Res
	PRF	699	5699		23995		17993
	SV	0.5mm	0.5mm		0.5mm		0.5mm

Transducer Model: L20-5s

Imaging Mode: B+PW-mode

Index label		MI	TIS		TIB		TIC
			At surface	Below surface	At surface	Below surface	
Maximum index value		0.34	0.79		0.76		0.96
Index component value			0.79	0.73	0.76	0.68	
Acoustic Parameters	$p_{r,\alpha}$ at z_{MI} (MPa)	1.08					
	P (mW)		46.32		44.92		44.82
	$P_{1\times1}$ (mW)		17.02		16.54		
	z_s (cm)			0.67			
	z_b (cm)					0.94	
	z_{MI} (cm)	1.98					
	$z_{pii,\alpha}$ (cm)	1.98					
	f_{awf} (MHz)	10.00	13.37		13.37		13.37
Other Information	prr (Hz)	2,799.00					
	srr (Hz)	34.00					
	n_{pps}	1.09					
	$I_{pa,\alpha}$ at $z_{pii,\alpha}$ (W/cm^2)	43.57					
	$I_{spta,\alpha}$ at $z_{pii,\alpha}$ or $z_{sii,\alpha}$ (mW/cm^2)	0.84					
	I_{spta} at z_{pii} or z_{sii} (mW/cm^2)	3.30					
	p_r at z_{pii} (MPa)	2.13					
Operating control conditions	Acoustic power	100%	100%		100%		100%
	Display depth	21cm	5cm		5cm		5cm
	B Focus Position	1.5cm	1.0cm		1.0cm		1.0cm
	SV Position	1.5cm	1.0cm		1.0cm		1.0cm
	B Working Frequency	Pen	HRes		HRes		HRes
	PW Working Frequency	Pen	Res		Pen		Res
	B PRF	2799	11199		11199		11199
	PW PRF	699	699		699		699
	PW SV	0.5mm	0.5mm		0.5mm		0.5mm

Transducer Model: L20-5s

Imaging Mode: Color+B-Mode / Power+B-Mode

Index label		MI	TIS		TIB		TIC
			At surface	Below surface	At surface	Below surface	
Maximum index value		0.79	0.61		0.64		0.68
Index component value			0.61	0.61	0.64	0.64	
Acoustic Parameters	$p_{r,\alpha}$ at z_{MI} (MPa)	2.63					
	P (mW)		37.40		39.10		35.10
	$P_{1\times1}$ (mW)		13.01		13.60		
	z_s (cm)			/			
	z_b (cm)					/	
	z_{MI} (cm)	0.50					
	$z_{pii,\alpha}$ (cm)	0.50					
	f_{awf} (MHz)	11.08	11.08		11.08		11.08
Other Information	prr (Hz)	4,305.00					
	srr (Hz)	6.00					
	n_{pps}	39.00					
	$I_{pa,\alpha}$ at $z_{pii,\alpha}$ (W/cm^2)	248.41					
	$I_{spta,\alpha}$ at $z_{pii,\alpha}$ or $z_{sii,\alpha}$ (mW/cm^2)	1.03					
	I_{spta} at z_{pii} or z_{sii} (mW/cm^2)	2.41					
	p_r at z_{pii} (MPa)	3.86					
Operating control conditions	Acoustic power	100%	100%		100%		100%
	Display depth	21cm	21cm		21cm		5cm
	B Focus Position	1.5cm	0.5cm		0.5cm		1.0cm
	Color Sampling Gate Position	1.5cm	0.5cm		0.5cm		1.0cm
	B Working Frequency	HPen	Gen		Gen		HRes
	C Working Frequency	Gen	Gen		Gen		Gen
	B PRF	2473	1552		1552		4918
	Color PRF	4305	8106		8106		8560

Transducer Model: L20-5s

Imaging Mode: Color+B+PW-Mode/Power+B+PW-Mode

Index label		MI	TIS		TIB		TIC
			At surface	Below surface	At surface	Below surface	
Maximum index value		0.45	1.24		1.12		1.04
Index component value			1.24	0.95	1.12	0.95	
Acoustic Parameters	$p_{r,\alpha}$ at z_{MI} (MPa)	1.53					
	P (mW)		46.11		47.01		44.81
	$P_{1\times1}$ (mW)		20.82		21.12		
	z_s (cm)			0.99			
	z_b (cm)					0.89	
	z_{MI} (cm)	1.39					
	$z_{pii,\alpha}$ (cm)	1.39					
	f_{awf} (MHz)	11.42	13.28		13.28		13.28
Other Information	prr (Hz)	979.00					
	srr (Hz)	3.00					
	n_{pps}	10.14					
	$I_{pa,\alpha}$ at $z_{pii,\alpha}$ (W/cm^2)	70.32					
	$I_{spta,\alpha}$ at $z_{pii,\alpha}$ or $z_{sii,\alpha}$ (mW/cm^2)	0.18					
	I_{spta} at z_{pii} or z_{sii} (mW/cm^2)	0.53					
	p_r at z_{pii} (MPa)	2.57					
Operating control conditions	Acoustic power	100%	100%		100%		100%
	Display depth	21cm	21cm		21cm		21cm
	B Focus Position	1.5cm	4.5cm		1.0cm		4.5cm
	Color SG Position	1.5cm	4.5cm		1.0cm		4.5cm
	PW SV Position	1.5cm	4.5cm		1.0cm		4.5cm
	B Working Frequency	Pen	Gen		HRes		Gen
	C Working Frequency	Gen	Gen		Res		Gen
	PW Working Frequency	Pen	Res		Pen		Res
	B PRF	200	159		319		159
	C PRF	979	841		542		841
	PW PRF	4968	4951		4915		4951
	PW SV	0.5mm	0.5mm		0.5mm		0.5mm

J.11 P4-2s

Transducer Model: P4-2s

Imaging Mode: M-mode

Index label		MI	TIS		TIB		TIC
			At surface	Below surface	At surface	Below surface	
Maximum index value		1.47	0.44		1.95		0.98
Index component value			0.27	0.44	0.89	1.95	
Acoustic Parameters	$p_{r,\alpha}$ at z_{MI} (MPa)	2.11					
	P (mW)		67.19		55.76		68.78
	$P_{1\times1}$ (mW)		27.77		28.81		
	z_s (cm)			2.74			
	z_b (cm)					4.80	
	z_{MI} (cm)	4.05					
	$z_{pii,\alpha}$ (cm)	4.05					
	f_{awf} (MHz)	2.06	2.04		1.86		2.03
Other Information	prr (Hz)	1,000.00					
	srr (Hz)	/					
	n_{pps}	/					
	$I_{pa,\alpha}$ at $z_{pii,\alpha}$ (W/cm^2)	285.86					
	$I_{spta,\alpha}$ at $z_{pii,\alpha}$ or $z_{sii,\alpha}$ (mW/cm^2)	296.97					
	I_{spta} at z_{pii} or z_{sii} (mW/cm^2)	530.41					
	p_r at z_{pii} (MPa)	2.82					
Operating control conditions	Acoustic power	100%	100%		100%		100%
	Display depth	15cm	15cm		15cm		15cm
	Focus position	5.0cm	9.0cm		7.0cm		9.0cm
	Working Frequency	HRes	HRes		HPen		HRes
	PRF	1000	1000		2000		1000

Transducer Model: P4-2s

Imaging Mode: B-mode

Index label		MI	TIS		TIB		TIC
			At surface	Below surface	At surface	Below surface	
Maximum index value		1.18	1.57		4.22		4.43
Index component value			1.57	1.57	4.22	1.62	
Acoustic Parameters	$p_{r,\alpha}$ at z_{MI} (MPa)	1.89					
	P (mW)		186.27		187.59		196.74
	$P_{1\times1}$ (mW)		147.83		148.88		
	z_s (cm)			/			
	z_b (cm)					/	
	z_{MI} (cm)	4.50					
	$z_{pii,\alpha}$ (cm)	4.50					
	f_{awf} (MHz)	2.56	2.23		2.28		1.85
Other Information	*prr* (Hz)	4,315.00					
	srr (Hz)	52.00					
	n_{pps}	2.00					
	$I_{pa,\alpha}$ at $z_{pii,\alpha}$ (W/cm^2)	258.32					
	$I_{spta,\alpha}$ at $z_{pii,\alpha}$ or $z_{sii,\alpha}$ (mW/cm^2)	20.84					
	I_{spta} at z_{pii} or z_{sii} (mW/cm^2)	47.35					
	p_r at z_{pii} (MPa)	2.72					
Operating control conditions	Acoustic power	100%	100%		100%		100%
	Display depth	15cm	15cm		15cm		15cm
	Focus position	5.0cm	3.0cm		3.0cm		3.0cm
	Working Frequency	Res	Pen		Pen		HPen
	PRF	4315	4315		4315		4315

Transducer Model: P4-2s

Imaging Mode: B+M-mode

Index label		MI	TIS		TIB		TIC
			At surface	Below surface	At surface	Below surface	
Maximum index value		1.18	1.58		2.81		3.96
Index component value			1.58	1.57	1.63	2.81	
Acoustic Parameters	$p_{r,\alpha}$ at z_{MI} (MPa)	1.88					
	P (mW)		203.27		262.02		175.93
	$P_{1\times1}$ (mW)		161.32		154.73		
	z_s (cm)			1.77			
	z_b (cm)					4.35	
	z_{MI} (cm)	4.56					
	$z_{pii,\alpha}$ (cm)	4.56					
	f_{awf} (MHz)	2.56	2.06		2.22		1.84
Other Information	*prr* (Hz)	1,000.00					
	srr (Hz)	24.00					
	n_{pps}	/					
	$I_{pa,\alpha}$ at $z_{pii,\alpha}$ (W/cm^2)	225.81					
	$I_{spta,\alpha}$ at $z_{pii,\alpha}$ or $z_{sii,\alpha}$ (mW/cm^2)	117.59					
	I_{spta} at z_{pii} or z_{sii} (mW/cm^2)	267.35					
	p_r at z_{pii} (MPa)	2.63					
Operating control conditions	Acoustic power	100%	100%		100%		100%
	Display depth	15cm	15cm		15cm		15cm
	B/M Focus position	5.0cm	3.0cm		6.0cm		3.0cm
	B/M Working Frequency	Res	HRes		Pen		HPen
	B PRF	2000	2000		2000		3500
	M PRF	1000	1000		1000		500

Transducer Model: P4-2s

Imaging Mode: PW-mode/TVD-mode

Index label		MI	TIS		TIB		TIC
			At surface	Below surface	At surface	Below surface	
Maximum index value		0.74	1.14		2.77		1.78
Index component value			0.99	1.14	1.80	2.77	
Acoustic Parameters	$p_{r,\alpha}$ at z_{MI} (MPa)	1.19					
	P (mW)		141.82		109.48		108.42
	$P_{1\times1}$ (mW)		80.86		60.34		
	z_s (cm)			2.33			
	z_b (cm)					5.09	
	z_{MI} (cm)	1.97					
	$z_{pii,\alpha}$ (cm)	1.97					
	f_{awf} (MHz)	2.57	2.56		2.02		2.02
Other Information	*prr* (Hz)	5,299.00					
	srr (Hz)	/					
	n_{pps}	/					
	$I_{pa,\alpha}$ at $z_{pii,\alpha}$ (W/cm^2)	54.37					
	$I_{spta,\alpha}$ at $z_{pii,\alpha}$ or $z_{sii,\alpha}$ (mW/cm^2)	410.94					
	I_{spta} at z_{pii} or z_{sii} (mW/cm^2)	759.50					
	p_r at z_{pii} (MPa)	1.28					
Operating control conditions	Acoustic power	100%	100%		100%		100%
	Display depth	15cm	15cm		15cm		15cm
	SV Position	3.0cm	12.0cm		13.0cm		13.0cm
	Working Frequency	Res	Res		Pen		Pen
	PRF	5299	5299		4800		4800
	SV	1.0mm	1.0mm		1.0mm		1.0mm

Transducer Model: P4-2s

Imaging Mode: B+PW-mode/B+TVD-mode

Index label		MI	TIS		TIB		TIC
			At surface	Below surface	At surface	Below surface	
Maximum index value		1.18	1.16		2.95		2.22
Index component value			1.02	1.16	0.77	2.95	
Acoustic Parameters	$p_{r,\alpha}$ at z_{MI} (MPa)	1.89					
	P (mW)		142.30		151.04		127.92
	$P_{1\times1}$ (mW)		85.94		78.65		
	z_s (cm)			2.33			
	z_b (cm)					5.31	
	z_{MI} (cm)	4.50					
	$z_{pii,\alpha}$ (cm)	4.50					
	f_{awf} (MHz)	2.57	2.56		2.21		2.02
Other Information	prr (Hz)	538.00					
	srr (Hz)	10.00					
	n_{pps}	1.43					
	$I_{pa,\alpha}$ at $z_{pii,\alpha}$ (W/cm^2)	227.64					
	$I_{spta,\alpha}$ at $z_{pii,\alpha}$ or $z_{sii,\alpha}$ (mW/cm^2)	3.56					
	I_{spta} at z_{pii} or z_{sii} (mW/cm^2)	7.99					
	p_r at z_{pii} (MPa)	2.63					
Operating control conditions	Acoustic power	100%	100%		100%		100%
	Display depth	15cm	15cm		15cm		15cm
	B Focus Position	5.0cm	3.0cm		13.0cm		3.0cm
	SV Position	3.0cm	12.0cm		13.0cm		13.0cm
	B Working Frequency	Res	Pen		Pen		HPen
	PW Working Frequency	Pen	Res		Pen		Pen
	B PRF	538	538		536		536
	PW PRF	4637	4637		4202		4202
	PW SV	1.0mm	1.0mm		1.0mm		1.0mm

Transducer Model: P4-2s

Imaging Mode: Color+B-Mode / Power+B-Mode /TVI+B/TEI+B

Index label		MI	TIS		TIB		TIC
			At surface	Below surface	At surface	Below surface	
Maximum index value		1.23	1.08		1.18		2.68
Index component value			1.08	1.08	1.18	1.18	
Acoustic Parameters	$p_{r,\alpha}$ at z_{MI} (MPa)	1.89					
	P (mW)		135.70		147.87		134.65
	$P_{1\times1}$ (mW)		99.08		108.40		
	z_s (cm)			/			
	z_b (cm)					/	
	z_{MI} (cm)	2.02					
	$z_{pii,\alpha}$ (cm)	2.02					
	f_{awf} (MHz)	2.37	2.31		2.31		2.31
Other Information	prr (Hz)	2,111.00					
	srr (Hz)	31.00					
	n_{pps}	1.19					
	$I_{pa,\alpha}$ at $z_{pii,\alpha}$ (W/cm^2)	162.65					
	$I_{spta,\alpha}$ at $z_{pii,\alpha}$ or $z_{sii,\alpha}$ (mW/cm^2)	8.43					
	I_{spta} at z_{pii} or z_{sii} (mW/cm^2)	14.01					
	p_r at z_{pii} (MPa)	2.06					
Operating control conditions	Acoustic power	100%	100%		100%		100%
	Display depth	15cm	15cm		15cm		15cm
	B Focus Position	3.0cm	3.0cm		3.0cm		3.0cm
	Color Sampling Gate Position	3.0cm	7.0cm		7.0cm		7.0cm
	B Working Frequency	Gen	Pen		Pen		HPen
	C Working Frequency	Pen	Gen		Gen		Gen
	B PRF	2111	1421		1421		1421
	Color PRF	6332	4342		4342		4342

Transducer Model: P4-2s

Imaging Mode: Color+B+PW-Mode/Power+B+PW-Mode //TVI+B+TVD/ TEI+B+TVD

Index label		MI	TIS		TIB		TIC
			At surface	Below surface	At surface	Below surface	
Maximum index value		0.64	1.09		2.82		2.60
Index component value			0.98	1.09	0.87	2.82	
Acoustic Parameters	$p_{r,\alpha}$ at z_{MI} (MPa)	1.06					
	P (mW)		141.20		144.93		150.32
	$P_{1\times1}$ (mW)		84.32		87.15		
	z_s (cm)			2.33			
	z_b (cm)					5.01	
	z_{MI} (cm)	2.17					
	$z_{pii,\alpha}$ (cm)	2.17					
	f_{awf} (MHz)	2.77	2.56		2.43		2.31
Other Information	prr (Hz)	437.00					
	srr (Hz)	8.00					
	n_{pps}	1.07					
	$I_{pa,\alpha}$ at $z_{pii,\alpha}$ (W/cm^2)	42.59					
	$I_{spta,\alpha}$ at $z_{pii,\alpha}$ or $z_{sii,\alpha}$ (mW/cm^2)	0.56					
	I_{spta} at z_{pii} or z_{sii} (mW/cm^2)	1.08					
	p_r at z_{pii} (MPa)	1.19					
Operating control conditions	Acoustic power	100%	100%		100%		100%
	Display depth	15cm	15cm		15cm		15cm
	B Focus Position	3.0cm	12.0cm		12.0cm		13.0cm
	Color SG Position	3.0cm	12.0cm		12.0cm		13.0cm
	PW SV Position	3.0cm	12.0cm		12.0cm		13.0cm
	B Working Frequency	Res	HRes		HRes		HRes
	C Working Frequency	Gen	Res		Res		Gen
	PW Working Frequency	Pen	Res		Pen		Pen
	B PRF	437	196		196		194
	C PRF	959	449		449		445
	PW PRF	4307	4345		4345		3902
	PW SV	1.0mm	1.0mm		1.0mm		1.0mm

Transducer Model: P4-2s

Imaging Mode: CM/ TVM / B+CM/B+TVM

Index label		MI	TIS		TIB		TIC
			At surface	Below surface	At surface	Below surface	
Maximum index value		1.45	1.20		3.51		2.77
Index component value			1.00	1.20	0.93	3.51	
Acoustic Parameters	$p_{r,\alpha}$ at z_{MI} (MPa)	2.18					
	P (mW)		158.78		154.31		160.71
	$P_{1\times1}$ (mW)		91.78		86.46		
	z_s (cm)			2.35			
	z_b (cm)					5.17	
	z_{MI} (cm)	2.22					
	$z_{pii,\alpha}$ (cm)	2.22					
	f_{awf} (MHz)	2.27	2.28		2.28		2.28
Other Information	*prr* (Hz)	167.00					
	srr (Hz)	/					
	n_{pps}	/					
	$I_{pa,\alpha}$ at $z_{pii,\alpha}$ (W/cm^2)	264.46					
	$I_{spta,\alpha}$ at $z_{pii,\alpha}$ or $z_{sii,\alpha}$ (mW/cm^2)	26.56					
	I_{spta} at z_{pii} or z_{sii} (mW/cm^2)	38.77					
	p_r at z_{pii} (MPa)	2.66					
Operating control conditions	Acoustic power	100%	100%		100%		100%
	Display depth	15cm	15cm		15cm		15cm
	M Focus Position	3.0cm	3.0cm		3.0cm		3.0cm
	CM Focus Position	3.0cm	12.0cm		13.0cm		11.0cm
	M Working Frequency	Pen	Pen		HRes		HRes
	CM Working Frequency	Pen	Gen		Gen		Gen
	M PRF	167	167		167		167
	CM PRF	1833	1833		1833		1833

Transducer Model: P4-2s

Imaging Mode: CW-mode

Index label		MI	TIS		TIB		TIC
			At surface	Below surface	At surface	Below surface	
Maximum index value		0.08	1.05		3.82		3.11
Index component value			1.05	1.03	3.11	3.82	
Acoustic Parameters	$p_{r,\alpha}$ at z_{MI} (MPa)	0.11					
	P (mW)		138.30		138.30		138.30
	$P_{1\times1}$ (mW)		109.76		109.76		
	z_s (cm)			1.75			
	z_b (cm)					3.10	
	z_{MI} (cm)	3.75					
	$z_{pii,\alpha}$ (cm)	3.75					
	f_{awf} (MHz)	2.00	2.00		2.00		2.00
Other Information	prr (Hz)	/					
	srr (Hz)	/					
	n_{pps}	/					
	$I_{pa,\alpha}$ at $z_{pii,\alpha}$ (W/cm^2)	0.43					
	$I_{spta,\alpha}$ at $z_{pii,\alpha}$ or $z_{sii,\alpha}$ (mW/cm^2)	431.33					
	I_{spta} at z_{pii} or z_{sii} (mW/cm^2)	731.37					
	p_r at z_{pii} (MPa)	0.15					
Operating control conditions	Acoustic power	100%	100%		100%		100%
	Display depth	15cm	15cm		15cm		15cm
	Focus position	8.0cm	8.0cm		8.0cm		8.0cm
	Working Frequency	2	2		2		2

J.12 P7-3s

Transducer Model: P7-3s

Imaging Mode: M-mode

Index label		MI	TIS		TIB		TIC
			At surface	Below surface	At surface	Below surface	
Maximum index value		1.43	0.44		2.16		0.95
Index component value			0.42	0.44	1.19	2.16	
Acoustic Parameters	$p_{r,\alpha}$ at z_{MI} (MPa)	3.16					
	P (mW)		47.79		47.79		47.74
	$P_{1\times1}$ (mW)		31.11		47.79		
	z_s (cm)			2.00			
	z_b (cm)					2.67	
	z_{MI} (cm)	1.64					
	$z_{pii,\alpha}$ (cm)	1.64					
	f_{awf} (MHz)	4.86	2.83		2.83		2.84
Other Information	*prr* (Hz)	1,000.00					
	srr (Hz)	/					
	n_{pps}	/					
	$I_{pa,\alpha}$ at $z_{pii,\alpha}$ (W/cm^2)	337.15					
	$I_{spta,\alpha}$ at $z_{pii,\alpha}$ or $z_{sii,\alpha}$ (mW/cm^2)	88.80					
	I_{spta} at z_{pii} or z_{sii} (mW/cm^2)	156.13					
	p_r at z_{pii} (MPa)	4.05					
Operating control conditions	Acoustic power	100%	100%		100%		100%
	Display depth	21cm	21cm		5cm		21cm
	Focus position	2.0cm	9.0cm		3.0cm		8.0cm
	Working Frequency	Gen	HGen		HGen		HGen
	PRF	1000	1500		3000		1500

Transducer Model: P7-3s

Imaging Mode: B-mode

Index label		MI	TIS		TIB		TIC
			At surface	Below surface	At surface	Below surface	
Maximum index value		1.20	0.33		0.59		0.61
Index component value			0.33	0.33	0.59	0.34	
Acoustic Parameters	$p_{r,\alpha}$ at z_{MI} (MPa)	2.74					
	P (mW)		28.70		29.60		30.40
	$P_{1\times1}$ (mW)		18.68		19.27		
	z_s (cm)			/			
	z_b (cm)					/	
	z_{MI} (cm)	1.54					
	$z_{pii,\alpha}$ (cm)	1.54					
	f_{awf} (MHz)	5.21	3.66		3.66		3.56
Other Information	*prr* (Hz)	2,660.00					
	srr (Hz)	35.00					
	n_{pps}	2.00					
	$I_{pa,\alpha}$ at $z_{pii,\alpha}$ (W/cm^2)	313.14					
	$I_{spta,\alpha}$ at $z_{pii,\alpha}$ or $z_{sii,\alpha}$ (mW/cm^2)	8.28					
	I_{spta} at z_{pii} or z_{sii} (mW/cm^2)	14.58					
	p_r at z_{pii} (MPa)	3.52					
Operating control conditions	Acoustic power	100%	100%		100%		100%
	Display depth	21cm	21cm		21cm		21cm
	Focus position	2.0cm	5.0cm		9.0cm		8.0cm
	Working Frequency	Gen	Pen		HGen		Pen
	PRF	2660	2660		2280		2660

Transducer Model: P7-3s

Imaging Mode: B+M-mode

Index label		MI	TIS		TIB		TIC
			At surface	Below surface	At surface	Below surface	
Maximum index value		1.29	0.36		0.48		0.71
Index component value			0.36	0.36	0.36	0.48	
Acoustic Parameters	$p_{r,\alpha}$ at z_{MI} (MPa)	2.88					
	P (mW)		32.33		32.03		35.40
	$P_{1\times1}$ (mW)		21.05		20.85		
	z_s (cm)			2.01			
	z_b (cm)					3.87	
	z_{MI} (cm)	1.64					
	$z_{pii,\alpha}$ (cm)	1.64					
	f_{awf} (MHz)	4.94	3.64		3.64		3.56
Other Information	*prr* (Hz)	2,000.00					
	srr (Hz)	25.00					
	n_{pps}	2.17					
	$I_{pa,\alpha}$ at $z_{pii,\alpha}$ (W/cm^2)	413.55					
	$I_{spta,\alpha}$ at $z_{pii,\alpha}$ or $z_{sii,\alpha}$ (mW/cm^2)	8.07					
	I_{spta} at z_{pii} or z_{sii} (mW/cm^2)	14.26					
	p_r at z_{pii} (MPa)	3.71					
Operating control conditions	Acoustic power	100%	100%		100%		100%
	Display depth	21cm	21cm		21cm		21cm
	B/M Focus position	2.0cm	5.0cm		9.0cm		8.0cm
	B/M Working Frequency	Gen	Pen		HGen		Pen
	B PRF	2000	2000		1875		2000
	M PRF	250	250		375		250

Transducer Model: P7-3s

Imaging Mode: PW-mode/TVD-mode

Index label		MI	TIS		TIB		TIC
			At surface	Below surface	At surface	Below surface	
Maximum index value		1.32	1.18		2.46		2.33
Index component value			1.18	0.68	2.46	0.90	
Acoustic Parameters	$p_{r,\alpha}$ at z_{MI} (MPa)	2.18					
	P (mW)		61.52		61.52		58.36
	$P_{1\times1}$ (mW)		61.52		61.52		
	z_s (cm)			2.00			
	z_b (cm)					2.92	
	z_{MI} (cm)	0.80					
	$z_{pii,\alpha}$ (cm)	0.80					
	f_{awf} (MHz)	2.71	4.04		4.04		4.01
Other Information	prr (Hz)	699.00					
	srr (Hz)	/					
	n_{pps}	/					
	$I_{pa,\alpha}$ at $z_{pii,\alpha}$ (W/cm^2)	153.18					
	$I_{spta,\alpha}$ at $z_{pii,\alpha}$ or $z_{sii,\alpha}$ (mW/cm^2)	151.11					
	I_{spta} at z_{pii} or z_{sii} (mW/cm^2)	175.53					
	p_r at z_{pii} (MPa)	2.35					
Operating control conditions	Acoustic power	100%	100%		100%		100%
	Display depth	5cm	21cm		21cm		21cm
	SV Position	2.0cm	10.0cm		4.0cm		4.0cm
	Working Frequency	Pen	Res		Res		Res
	PRF	699	5699		5699		5699
	SV	0.5mm	0.5mm		0.5mm		0.5mm

Transducer Model: P7-3s

Imaging Mode: B+PW-mode/B+TVD-mode

Index label		MI	TIS		TIB		TIC
			At surface	Below surface	At surface	Below surface	
Maximum index value		1.40	1.37		2.38		2.80
Index component value			1.37	0.95	1.36	2.38	
Acoustic Parameters	$p_{r,\alpha}$ at z_{MI} (MPa)	2.74					
	P (mW)		84.57		83.97		73.48
	$P_{1\times1}$ (mW)		73.19		72.80		
	z_s (cm)			2.00			
	z_b (cm)					2.92	
	z_{MI} (cm)	3.49					
	$z_{pii,\alpha}$ (cm)	3.49					
	f_{awf} (MHz)	3.86	4.01		4.01		4.05
Other Information	*prr* (Hz)	1,399.00					
	srr (Hz)	14.00					
	n_{pps}	1.43					
	$I_{pa,\alpha}$ at $z_{pii,\alpha}$ (W/cm^2)	393.31					
	$I_{spta,\alpha}$ at $z_{pii,\alpha}$ or $z_{sii,\alpha}$ (mW/cm^2)	6.04					
	I_{spta} at z_{pii} or z_{sii} (mW/cm^2)	15.36					
	p_r at z_{pii} (MPa)	4.09					
Operating control conditions	Acoustic power	100%	100%		100%		100%
	Display depth	21cm	21cm		21cm		5cm
	B Focus Position	4.0cm	10.0cm		11.0cm		3.0cm
	SV Position	4.0cm	10.0cm		11.0cm		3.0cm
	B Working Frequency	Pen	Pen		HPen		Pen
	PW Working Frequency	Pen	Res		Pen		Gen
	B PRF	1399	324		281		703
	PW PRF	699	4989		4988		5235
	PW SV	0.5mm	0.5mm		0.5mm		0.5mm

Transducer Model: P7-3s

Imaging Mode: Color+B-Mode / Power+B-Mode /TVI+B/TEI+B

Index label		MI	TIS		TIB		TIC
			At surface	Below surface	At surface	Below surface	
Maximum index value		1.37	1.22		1.25		2.34
Index component value			1.22	1.22	1.25	1.25	
Acoustic Parameters	$p_{r,\alpha}$ at z_{MI} (MPa)	2.25					
	P (mW)		94.50		96.10		98.10
	$P_{1\times1}$ (mW)		76.83		78.19		
	z_s (cm)			/			
	z_b (cm)					/	
	z_{MI} (cm)	2.01					
	$z_{pii,\alpha}$ (cm)	2.01					
	f_{awf} (MHz)	2.71	3.56		3.56		3.55
Other Information	prr (Hz)	1,356.00					
	srr (Hz)	30.00					
	n_{pps}	11.00					
	$I_{pa,\alpha}$ at $z_{pii,\alpha}$ (W/cm^2)	194.54					
	$I_{spta,\alpha}$ at $z_{pii,\alpha}$ or $z_{sii,\alpha}$ (mW/cm^2)	24.63					
	I_{spta} at z_{pii} or z_{sii} (mW/cm^2)	35.89					
	p_r at z_{pii} (MPa)	2.72					
Operating control conditions	Acoustic power	100%	100%		100%		100%
	Display depth	5cm	21cm		21cm		21cm
	B Focus Position	2.0cm	8.0cm		8.0cm		8.0cm
	Color Sampling Gate Position	2.0cm	8.0cm		8.0cm		8.0cm
	B Working Frequency	Pen	Pen		Pen		Pen
	C Working Frequency	Pen	Gen		Gen		Gen
	B PRF	1868	1405		1405		1405
	Color PRF	1356	1020		1020		1020

Transducer Model: P7-3s

Imaging Mode: Color+B+PW-Mode/Power+B+PW-Mode //TVI+B+TVD/ TEI+B+TVD

Index label		MI	TIS		TIB		TIC
			At surface	Below surface	At surface	Below surface	
Maximum index value		1.21	1.93		2.15		2.96
Index component value			1.93	1.65	1.95	2.15	
Acoustic Parameters	$p_{r,\alpha}$ at z_{MI} (MPa)	2.39					
	P (mW)		120.63		122.33		117.54
	$P_{1\times1}$ (mW)		107.64		108.90		
	z_s (cm)			2.00			
	z_b (cm)					2.39	
	z_{MI} (cm)	2.29					
	$z_{pii,\alpha}$ (cm)	2.29					
	f_{awf} (MHz)	3.89	4.51		4.51		4.43
Other Information	prr (Hz)	391.00					
	srr (Hz)	8.00					
	n_{pps}	1.07					
	$I_{pa,\alpha}$ at $z_{pii,\alpha}$ (W/cm^2)	253.37					
	$I_{spta,\alpha}$ at $z_{pii,\alpha}$ or $z_{sii,\alpha}$ (mW/cm^2)	2.21					
	I_{spta} at z_{pii} or z_{sii} (mW/cm^2)	4.18					
	p_r at z_{pii} (MPa)	3.07					
Operating control conditions	Acoustic power	100%	100%		100%		100%
	Display depth	21cm	21cm		21cm		21cm
	B Focus Position	2.0cm	11.0cm		11.0cm		11.0cm
	Color SG Position	2.0cm	11.0cm		11.0cm		11.0cm
	PW SV Position	2.0cm	11.0cm		11.0cm		11.0cm
	B Working Frequency	Pen	Gen		Res		Gen
	C Working Frequency	Pen	Res		Gen		Gen
	PW Working Frequency	Pen	Gen		Pen		Gen
	B PRF	391	322		318		318
	C PRF	269	228		225		225
	PW PRF	4572	4699		4644		4644
	PW SV	0.5mm	0.5mm		0.5mm		0.5mm

Transducer Model: P7-3s

Imaging Mode: CM/ TVM / B+CM/B+TVM

Index label		MI	TIS		TIB		TIC
			At surface	Below surface	At surface	Below surface	
Maximum index value		1.34	1.29		2.79		2.27
Index component value			1.29	0.93	1.29	2.79	
Acoustic Parameters	$p_{r,\alpha}$ at z_{MI} (MPa)	2.21					
	P (mW)		93.74		93.74		97.14
	$P_{1\times1}$ (mW)		82.89		82.89		
	z_s (cm)			2.00			
	z_b (cm)					2.79	
	z_{MI} (cm)	2.01					
	$z_{pii,\alpha}$ (cm)	2.01					
	f_{awf} (MHz)	2.72	3.73		3.73		3.46
Other Information	prr (Hz)	1,500.00					
	srr (Hz)	/					
	n_{pps}	/					
	$I_{pa,\alpha}$ at $z_{pii,\alpha}$ (W/cm^2)	182.21					
	$I_{spta,\alpha}$ at $z_{pii,\alpha}$ or $z_{sii,\alpha}$ (mW/cm^2)	382.28					
	I_{spta} at z_{pii} or z_{sii} (mW/cm^2)	563.75					
	p_r at z_{pii} (MPa)	2.48					
Operating control conditions	Acoustic power	100%	100%		100%		100%
	Display depth	5cm	21cm		21cm		21cm
	M Focus Position	2.0cm	11.0cm		10.0cm		9.0cm
	CM Focus Position	2.0cm	11.0cm		10.0cm		9.0cm
	M Working Frequency	Pen	Pen		Pen		Pen
	CM Working Frequency	Pen	Gen		Pen		Gen
	M PRF	125	125		125		125
	CM PRF	1500	1500		1500		1500

Transducer Model: P7-3s

Imaging Mode: CW-mode

Index label		MI	TIS		TIB		TIC
			At surface	Below surface	At surface	Below surface	
Maximum index value		0.07	0.45		1.60		1.33
Index component value			0.45	0.37	1.33	1.60	
Acoustic Parameters	$p_{r,\alpha}$ at z_{MI} (MPa)	0.12					
	P (mW)		38.29		38.29		38.29
	$P_{1\times1}$ (mW)		38.29		38.29		
	z_s (cm)			1.22			
	z_b (cm)					2.11	
	z_{MI} (cm)	2.11					
	$z_{pii,\alpha}$ (cm)	2.11					
	f_{awf} (MHz)	2.49	2.49		2.49		2.49
Other Information	prr (Hz)	/					
	srr (Hz)	/					
	n_{pps}	/					
	$I_{pa,\alpha}$ at $z_{pii,\alpha}$ (W/cm^2)	0.24					
	$I_{spta,\alpha}$ at $z_{pii,\alpha}$ or $z_{sii,\alpha}$ (mW/cm^2)	240.43					
	I_{spta} at z_{pii} or z_{sii} (mW/cm^2)	450.37					
	p_r at z_{pii} (MPa)	0.15					
Operating control conditions	Acoustic power	100%	100%		100%		100%
	Display depth	8.0cm	8.0cm		8.0cm		8.0cm
	Focus position	5.0cm	5.0cm		5.0cm		5.0cm
	Working Frequency	2.5	2.5		2.5		2.5

J.13 P7-3Ts

Transducer Model: P7-3Ts

Imaging Mode: M-mode

Index label		MI	TIS		TIB		TIC
			At surface	Below surface	At surface	Below surface	
Maximum index value		0.90	0.12		0.56		0.56
Index component value			0.12	0.10	0.56	0.29	
Acoustic Parameters	$p_{r,\alpha}$ at z_{MI} (MPa)	1.78					
	P (mW)		7.43		7.43		7.43
	$P_{1\times1}$ (mW)		7.43		7.43		
	z_s (cm)			0.80			
	z_b (cm)					2.76	
	z_{MI} (cm)	1.43					
	$z_{pii,\alpha}$ (cm)	1.43					
	f_{awf} (MHz)	3.95	3.45		3.45		3.45
Other Information	*prr* (Hz)	500.00					
	srr (Hz)	/					
	n_{pps}	/					
	$I_{pa,\alpha}$ at $z_{pii,\alpha}$ (W/cm^2)	62.36					
	$I_{spta,\alpha}$ at $z_{pii,\alpha}$ or $z_{sii,\alpha}$ (mW/cm^2)	15.12					
	I_{spta} at z_{pii} or z_{sii} (mW/cm^2)	22.34					
	p_r at z_{pii} (MPa)	2.13					
Operating control conditions	Acoustic power	100%	100%		100%		100%
	Display depth	21cm	21cm		21cm		21cm
	Focus position	3.0cm	6.0cm		6.0cm		6.0cm
	Working Frequency	Pen	HRes		HRes		HRes
	PRF	500	2000		2000		2000

Transducer Model: P7-3Ts

Imaging Mode: B-mode

Index label		MI	TIS		TIB		TIC
			At surface	Below surface	At surface	Below surface	
Maximum index value		0.68	0.10		0.50		0.50
Index component value			0.10	0.10	0.50	0.10	
Acoustic Parameters	$p_{r,\alpha}$ at z_{MI} (MPa)	1.35					
	P (mW)		6.60		6.60		6.60
	$P_{1\times1}$ (mW)		6.60		6.60		
	z_s (cm)			/			
	z_b (cm)					/	
	z_{MI} (cm)	1.37					
	$z_{pii,\alpha}$ (cm)	1.37					
	f_{awf} (MHz)	3.91	3.20		3.20		3.20
Other Information	*prr* (Hz)	1,076.00					
	srr (Hz)	20.00					
	n_{pps}	2.00					
	$I_{pa,\alpha}$ at $z_{pii,\alpha}$ (W/cm^2)	62.45					
	$I_{spta,\alpha}$ at $z_{pii,\alpha}$ or $z_{sii,\alpha}$ (mW/cm^2)	1.82					
	I_{spta} at z_{pii} or z_{sii} (mW/cm^2)	2.68					
	p_r at z_{pii} (MPa)	1.63					
Operating control conditions	Acoustic power	100%	100%		100%		100%
	Display depth	21cm	21cm		21cm		21cm
	Focus position	3.0cm	6.0cm		6.0cm		6.0cm
	Working Frequency	Pen	HPen		HPen		HPen
	PRF	1076	2153		2153		2153

Transducer Model: P7-3Ts

Imaging Mode: B+M-mode

Index label		MI	TIS		TIB		TIC
			At surface	Below surface	At surface	Below surface	
Maximum index value		0.84	0.13		0.14		0.45
Index component value			0.13	0.13	0.13	0.14	
Acoustic Parameters	$p_{r,\alpha}$ at z_{MI} (MPa)	1.67					
	P (mW)		5.94		5.94		5.94
	$P_{1\times1}$ (mW)		5.94		5.94		
	z_s (cm)			0.80			
	z_b (cm)					3.42	
	z_{MI} (cm)	1.28					
	$z_{pii,\alpha}$ (cm)	1.28					
	f_{awf} (MHz)	3.94	4.61		4.61		4.61
Other Information	prr (Hz)	750.00					
	srr (Hz)	13.00					
	n_{pps}	2.17					
	$I_{pa,\alpha}$ at $z_{pii,\alpha}$ (W/cm^2)	100.27					
	$I_{spta,\alpha}$ at $z_{pii,\alpha}$ or $z_{sii,\alpha}$ (mW/cm^2)	1.82					
	I_{spta} at z_{pii} or z_{sii} (mW/cm^2)	2.63					
	p_r at z_{pii} (MPa)	1.91					
Operating control conditions	Acoustic power	100%	100%		100%		100%
	Display depth	21cm	21cm		21cm		21cm
	B/M Focus position	3.0cm	6.0cm		6.0cm		6.0cm
	B/M Working Frequency	Pen	Gen		HPen		HPen
	B PRF	750	750		1000		1750
	M PRF	125	125		1000		250

Transducer Model: P7-3Ts

Imaging Mode: PW-mode/TVD-mode

Index label		MI	TIS		TIB		TIC
			At surface	Below surface	At surface	Below surface	
Maximum index value		0.88	0.21		0.86		1.48
Index component value			0.21	0.17	0.86	0.33	
Acoustic Parameters	$p_{r,\alpha}$ at z_{MI} (MPa)	1.60					
	P (mW)		11.28		11.28		11.28
	$P_{1\times1}$ (mW)		11.28		11.28		
	z_s (cm)			0.80			
	z_b (cm)					3.22	
	z_{MI} (cm)	1.16					
	$z_{pii,\alpha}$ (cm)	1.16					
	f_{awf} (MHz)	3.35	3.98		3.98		3.98
Other Information	prr (Hz)	699.00					
	srr (Hz)	/					
	n_{pps}	/					
	$I_{pa,\alpha}$ at $z_{pii,\alpha}$ (W/cm^2)	106.28					
	$I_{spta,\alpha}$ at $z_{pii,\alpha}$ or $z_{sii,\alpha}$ (mW/cm^2)	74.05					
	I_{spta} at z_{pii} or z_{sii} (mW/cm^2)	97.10					
	p_r at z_{pii} (MPa)	1.81					
Operating control conditions	Acoustic power	100%	100%		100%		100%
	Display depth	5cm	21cm		21cm		5cm
	SV Position	3.0cm	8.0cm		6.0cm		2.0cm
	Working Frequency	Gen	Res		Pen		Pen
	PRF	699	7099		5699		699
	SV	0.5mm	0.5mm		0.5mm		0.5mm

Transducer Model: P7-3Ts

Imaging Mode: B+PW-mode/B+TVD-mode

Index label		MI	TIS		TIB		TIC
			At surface	Below surface	At surface	Below surface	
Maximum index value		0.76	0.26		1.42		1.29
Index component value			0.26	0.24	0.26	1.42	
Acoustic Parameters	$p_{r,\alpha}$ at z_{MI} (MPa)	1.25					
	P (mW)		16.94		16.94		16.94
	$P_{1\times1}$ (mW)		16.94		16.94		
	z_s (cm)			0.80			
	z_b (cm)					2.55	
	z_{MI} (cm)	2.84					
	$z_{pii,\alpha}$ (cm)	2.84					
	f_{awf} (MHz)	2.76	3.95		3.95		3.95
Other Information	prr (Hz)	699.00					
	srr (Hz)	7.00					
	n_{pps}	/					
	$I_{pa,\alpha}$ at $z_{pii,\alpha}$ (W/cm^2)	89.72					
	$I_{spta,\alpha}$ at $z_{pii,\alpha}$ or $z_{sii,\alpha}$ (mW/cm^2)	87.31					
	I_{spta} at z_{pii} or z_{sii} (mW/cm^2)	153.93					
	p_r at z_{pii} (MPa)	1.62					
Operating control conditions	Acoustic power	100%	100%		100%		100%
	Display depth	21cm	21cm		21cm		21cm
	B Focus Position	6.0cm	6.0cm		6.0cm		6.0cm
	SV Position	6.0cm	6.0cm		6.0cm		6.0cm
	B Working Frequency	Pen	Pen		Pen		Pen
	PW Working Frequency	Pen	Pen		Pen		Pen
	B PRF	1399	2099		134		1399
	PW PRF	699	699		5385		699
	PW SV	0.5mm	0.5mm		0.5mm		0.5mm

Transducer Model: P7-3Ts

Imaging Mode: Color+B-Mode / Power+B-Mode /TVI+B/TEI+B

Index label		MI	TIS		TIB		TIC
			At surface	Below surface	At surface	Below surface	
Maximum index value		0.52	0.20		0.20		1.00
Index component value			0.20	0.20	0.20	0.20	
Acoustic Parameters	$p_{r,\alpha}$ at z_{MI} (MPa)	1.04					
	P (mW)		10.40		10.40		10.40
	$P_{1\times1}$ (mW)		10.40		10.40		
	z_s (cm)			/			
	z_b (cm)					/	
	z_{MI} (cm)	3.56					
	$z_{pii,\alpha}$ (cm)	3.56					
	f_{awf} (MHz)	3.93	4.60		4.60		4.60
Other Information	prr (Hz)	1,210.00					
	srr (Hz)	11.00					
	n_{pps}	1.19					
	$I_{pa,\alpha}$ at $z_{pii,\alpha}$ (W/cm^2)	61.66					
	$I_{spta,\alpha}$ at $z_{pii,\alpha}$ or $z_{sii,\alpha}$ (mW/cm^2)	0.93					
	I_{spta} at z_{pii} or z_{sii} (mW/cm^2)	2.53					
	p_r at z_{pii} (MPa)	1.63					
Operating control conditions	Acoustic power	100%	100%		100%		100%
	Display depth	21cm	21cm		21cm		21cm
	B Focus Position	6.0cm	6.0cm		6.0cm		5.0cm
	Color Sampling Gate Position	6.0cm	6.0cm		6.0cm		5.0cm
	B Working Frequency	Pen	Gen		Gen		Gen
	C Working Frequency	Pen	Gen		Gen		Gen
	B PRF	1210	1944		1944		261
	Color PRF	2118	1696		1696		1161

Transducer Model: P7-3Ts

Imaging Mode: Color+B+PW-Mode/Power+B+PW-Mode //TVI+B+TVD/ TEI+B+TVD

Index label		MI	TIS		TIB		TIC
			At surface	Below surface	At surface	Below surface	
Maximum index value		0.56	0.32		0.56		2.47
Index component value			0.32	0.30	0.32	0.56	
Acoustic Parameters	$p_{r,\alpha}$ at z_{MI} (MPa)	1.11					
	P (mW)		19.00		19.00		19.00
	$P_{1\times1}$ (mW)		19.00		19.00		
	z_s (cm)			0.80			
	z_b (cm)					2.55	
	z_{MI} (cm)	3.49					
	$z_{pii,\alpha}$ (cm)	3.49					
	f_{awf} (MHz)	3.95	4.60		4.60		4.60
Other Information	prr (Hz)	355.00					
	srr (Hz)	3.00					
	n_{pps}	1.07					
	$I_{pa,\alpha}$ at $z_{pii,\alpha}$ (W/cm^2)	79.54					
	$I_{spta,\alpha}$ at $z_{pii,\alpha}$ or $z_{sii,\alpha}$ (mW/cm^2)	0.32					
	I_{spta} at z_{pii} or z_{sii} (mW/cm^2)	0.84					
	p_r at z_{pii} (MPa)	1.73					
Operating control conditions	Acoustic power	100%	100%		100%		100%
	Display depth	21cm	21cm		21cm		21cm
	B Focus Position	6.0cm	6.0cm		6.0cm		2.0cm
	Color SG Position	6.0cm	6.0cm		6.0cm		2.0cm
	PW SV Position	6.0cm	6.0cm		6.0cm		2.0cm
	B Working Frequency	Pen	Gen		Pen		Gen
	C Working Frequency	Pen	Gen		Pen		Gen
	PW Working Frequency	Pen	Pen		Pen		Pen
	B PRF	355	307		355		416
	C PRF	185	319		185		425
	PW PRF	4500	4656		4500		4511
	PW SV	0.5mm	0.5mm		0.5mm		0.5mm

Transducer Model: P7-3Ts

Imaging Mode: CM/ TVM / B+CM/B+TVM

Index label		MI	TIS		TIB		TIC
			At surface	Below surface	At surface	Below surface	
Maximum index value		0.60	0.07		0.14		0.45
Index component value			0.07	0.06	0.07	0.14	
Acoustic Parameters	$p_{r,\alpha}$ at z_{MI} (MPa)	1.20					
	P (mW)		3.80		3.80		3.80
	$P_{1\times1}$ (mW)		3.80		3.80		
	z_s (cm)			0.80			
	z_b (cm)					1.03	
	z_{MI} (cm)	0.80					
	$z_{pii,\alpha}$ (cm)	0.80					
	f_{awf} (MHz)	4.02	5.31		5.31		5.31
Other Information	*prr* (Hz)	166.00					
	srr (Hz)	/					
	n_{pps}	/					
	$I_{pa,\alpha}$ at $z_{pii,\alpha}$ (W/cm^2)	51.06					
	$I_{spta,\alpha}$ at $z_{pii,\alpha}$ or $z_{sii,\alpha}$ (mW/cm^2)	3.10					
	I_{spta} at z_{pii} or z_{sii} (mW/cm^2)	3.87					
	p_r at z_{pii} (MPa)	1.34					
Operating control conditions	Acoustic power	100%	100%		100%		100%
	Display depth	21cm	21cm		5cm		5cm
	M Focus Position	2.0cm	10.0cm		3.0cm		3.0cm
	CM Focus Position	2.0cm	10.0cm		3.0cm		3.0cm
	M Working Frequency	Pen	Res		Res		Res
	CM Working Frequency	Pen	Res		Res		Res
	M PRF	166	166		250		125
	CM PRF	1333	1333		2000		2000

Transducer Model: P7-3Ts

Imaging Mode: CW-mode

Index label		MI	TIS		TIB		TIC
			At surface	Below surface	At surface	Below surface	
Maximum index value		0.05	0.86		3.90		3.90
Index component value			0.86	0.66	3.90	2.04	
Acoustic Parameters	$p_{r,\alpha}$ at z_{MI} (MPa)	0.12					
	P (mW)		36.29		36.29		36.29
	$P_{1\times1}$ (mW)		36.29		36.29		
	z_s (cm)			0.80			
	z_b (cm)					1.64	
	z_{MI} (cm)	1.64					
	$z_{pii,\alpha}$ (cm)	1.64					
	f_{awf} (MHz)	5.00	5.00		5.00		5.00
Other Information	prr (Hz)	/					
	srr (Hz)	/					
	n_{pps}	/					
	$I_{pa,\alpha}$ at $z_{pii,\alpha}$ (W/cm^2)	0.50					
	$I_{spta,\alpha}$ at $z_{pii,\alpha}$ or $z_{sii,\alpha}$ (mW/cm^2)	503.09					
	I_{spta} at z_{pii} or z_{sii} (mW/cm^2)	1,050.80					
	p_r at z_{pii} (MPa)	0.17					
Operating control conditions	Acoustic power	100%	100%		100%		100%
	Display depth	5.0cm	5.0cm		5.0cm		5.0cm
	Focus position	2.0cm	2.0cm		2.0cm		2.0cm
	Working Frequency	2.5	2.5		2.5		2.5

J.14 P10-4s

Transducer Model: P10-4s

Imaging Mode: M-mode

Index label		MI	TIS		TIB		TIC
			At surface	Below surface	At surface	Below surface	
Maximum index value		1.33	0.10		0.20		0.17
Index component value			0.10	0.07	0.18	0.20	
Acoustic Parameters	$p_{r,\alpha}$ at z_{MI} (MPa)	3.32					
	P (mW)		4.84		4.84		4.84
	$P_{1\times1}$ (mW)		3.78		4.84		
	z_s (cm)			1.44			
	z_b (cm)					1.10	
	z_{MI} (cm)	0.61					
	$z_{pii,\alpha}$ (cm)	0.61					
	f_{awf} (MHz)	6.25	5.42		5.42		5.42
Other Information	*prr* (Hz)	1,000.00					
	srr (Hz)	/					
	n_{pps}	/					
	$I_{pa,\alpha}$ at $z_{pii,\alpha}$ (W/cm^2)	366.17					
	$I_{spta,\alpha}$ at $z_{pii,\alpha}$ or $z_{sii,\alpha}$ (mW/cm^2)	78.89					
	I_{spta} at z_{pii} or z_{sii} (mW/cm^2)	102.73					
	p_r at z_{pii} (MPa)	3.79					
Operating control conditions	Acoustic power	100%	100%		100%		100%
	Display depth	13cm	13cm		13cm		13cm
	Focus position	1.0cm	5.0cm		2.5cm		3.0cm
	Working Frequency	Res	Pen		HPen		HPen
	PRF	1000	1000		1000		1000

Transducer Model: P10-4s

Imaging Mode: B-mode

Index label		MI	TIS		TIB		TIC
			At surface	Below surface	At surface	Below surface	
Maximum index value		1.15	0.46		0.64		0.79
Index component value			0.46	0.46	0.64	0.46	
Acoustic Parameters	$p_{r,\alpha}$ at z_{MI} (MPa)	2.85					
	P (mW)		23.00		23.00		23.00
	$P_{1\times1}$ (mW)		17.97		17.97		
	z_s (cm)			/			
	z_b (cm)					/	
	z_{MI} (cm)	0.56					
	$z_{pii,\alpha}$ (cm)	0.56					
	f_{awf} (MHz)	6.12	5.39		5.39		5.39
Other Information	*prr* (Hz)	4,358.00					
	srr (Hz)	44.00					
	n_{pps}	2.00					
	$I_{pa,\alpha}$ at $z_{pii,\alpha}$ (W/cm^2)	261.90					
	$I_{spta,\alpha}$ at $z_{pii,\alpha}$ or $z_{sii,\alpha}$ (mW/cm^2)	7.28					
	I_{spta} at z_{pii} or z_{sii} (mW/cm^2)	9.39					
	p_r at z_{pii} (MPa)	3.01					
Operating control conditions	Acoustic power	100%	100%		100%		100%
	Display depth	13cm	13cm		13cm		13cm
	Focus position	1.0cm	5.0cm		5.0cm		3.0cm
	Working Frequency	Res	Pen		Pen		HPen
	PRF	4358	4358		4358		3632

Transducer Model: P10-4s

Imaging Mode: B+M-mode

Index label		MI	TIS		TIB		TIC
			At surface	Below surface	At surface	Below surface	
Maximum index value		1.23	0.52		0.57		0.89
Index component value			0.52	0.51	0.52	0.57	
Acoustic Parameters	$p_{r,\alpha}$ at z_{MI} (MPa)	2.43					
	P (mW)		25.91		25.91		25.91
	$P_{1\times1}$ (mW)		20.24		20.24		
	z_s (cm)			1.44			
	z_b (cm)					1.44	
	z_{MI} (cm)	1.44					
	$z_{pii,\alpha}$ (cm)	1.44					
	f_{awf} (MHz)	3.89	5.40		5.40		5.40
Other Information	prr (Hz)	500.00					
	srr (Hz)	25.00					
	n_{pps}	/					
	$I_{pa,\alpha}$ at $z_{pii,\alpha}$ (W/cm^2)	509.98					
	$I_{spta,\alpha}$ at $z_{pii,\alpha}$ or $z_{sii,\alpha}$ (mW/cm^2)	121.17					
	I_{spta} at z_{pii} or z_{sii} (mW/cm^2)	178.65					
	p_r at z_{pii} (MPa)	2.95					
Operating control conditions	Acoustic power	100%	100%		100%		100%
	Display depth	13cm	13cm		13cm		13cm
	B/M Focus position	2.0cm	5.0cm		5.0cm		3.0cm
	B/M Working Frequency	HPen	Pen		Pen		HPen
	B PRF	2500	3000		3000		2500
	M PRF	500	500		500		500

Transducer Model: P10-4s

Imaging Mode: PW-mode/TVD-mode

Index label		MI	TIS		TIB		TIC
			At surface	Below surface	At surface	Below surface	
Maximum index value		1.14	0.82		2.51		1.20
Index component value			0.82	0.53	1.70	2.51	
Acoustic Parameters	$p_{r,\alpha}$ at z_{MI} (MPa)	2.29					
	P (mW)		30.61		30.61		30.61
	$P_{1\times1}$ (mW)		30.61		30.61		
	z_s (cm)			1.10			
	z_b (cm)					1.62	
	z_{MI} (cm)	0.50					
	$z_{pii,\alpha}$ (cm)	0.50					
	f_{awf} (MHz)	4.02	5.63		5.63		5.63
Other Information	prr (Hz)	699.00					
	srr (Hz)	/					
	n_{pps}	/					
	$I_{pa,\alpha}$ at $z_{pii,\alpha}$ (W/cm^2)	234.54					
	$I_{spta,\alpha}$ at $z_{pii,\alpha}$ or $z_{sii,\alpha}$ (mW/cm^2)	147.52					
	I_{spta} at z_{pii} or z_{sii} (mW/cm^2)	173.10					
	p_r at z_{pii} (MPa)	2.20					
Operating control conditions	Acoustic power	100%	100%		100%		100%
	Display depth	3.5cm	13cm		13cm		13cm
	SV Position	1.0cm	4.5cm		2.0cm		4.5cm
	Working Frequency	Pen	Res		Res		Res
	PRF	699	5699		17993		5699
	SV	0.5mm	0.5mm		0.5mm		0.5mm

Transducer Model: P10-4s

Imaging Mode: B+PW-mode/B+TVD-mode

Index label		MI	TIS		TIB		TIC
			At surface	Below surface	At surface	Below surface	
Maximum index value		1.30	1.14		3.22		1.64
Index component value			1.14	0.91	1.27	3.22	
Acoustic Parameters	$p_{r,\alpha}$ at z_{MI} (MPa)	2.69					
	P (mW)		48.80		48.80		48.80
	$P_{1\times1}$ (mW)		43.57		48.80		
	z_s (cm)			1.10			
	z_b (cm)					0.76	
	z_{MI} (cm)	1.39					
	$z_{pii,\alpha}$ (cm)	1.39					
	f_{awf} (MHz)	4.30	5.54		5.54		5.54
Other Information	*prr* (Hz)	2,799.00					
	srr (Hz)	34.00					
	n_{pps}	1.43					
	$I_{pa,\alpha}$ at $z_{pii,\alpha}$ (W/cm^2)	470.28					
	$I_{spta,\alpha}$ at $z_{pii,\alpha}$ or $z_{sii,\alpha}$ (mW/cm^2)	20.35					
	I_{spta} at z_{pii} or z_{sii} (mW/cm^2)	31.66					
	p_r at z_{pii} (MPa)	3.20					
Operating control conditions	Acoustic power	100%	100%		100%		100%
	Display depth	13cm	13cm		3.5cm		13cm
	B Focus Position	2.0cm	5.0cm		1.5cm		5.0cm
	SV Position	2.0cm	5.0cm		1.5cm		5.0cm
	B Working Frequency	HGen	Pen		Pen		Pen
	PW Working Frequency	Pen	Res		Pen		Res
	B PRF	2799	3499		897		3499
	PW PRF	699	699		5265		699
	PW SV	0.5mm	0.5mm		0.5mm		0.5mm

Transducer Model: P10-4s

Imaging Mode: Color+B-Mode / Power+B-Mode /TVI+B/TEI+B

Index label		MI	TIS		TIB		TIC
			At surface	Below surface	At surface	Below surface	
Maximum index value		1.10	1.08		1.08		1.48
Index component value			1.08	1.08	1.08	1.08	
Acoustic Parameters	$p_{r,\alpha}$ at z_{MI} (MPa)	2.75					
	P (mW)		51.20		51.20		51.20
	$P_{1\times1}$ (mW)		43.44		43.44		
	z_s (cm)			/			
	z_b (cm)					/	
	z_{MI} (cm)	0.56					
	$z_{pii,\alpha}$ (cm)	0.56					
	f_{awf} (MHz)	6.29	5.40		5.40		5.40
Other Information	prr (Hz)	2,073.00					
	srr (Hz)	20.00					
	n_{pps}	1.19					
	$I_{pa,\alpha}$ at $z_{pii,\alpha}$ (W/cm^2)	237.81					
	$I_{spta,\alpha}$ at $z_{pii,\alpha}$ or $z_{sii,\alpha}$ (mW/cm^2)	2.98					
	I_{spta} at z_{pii} or z_{sii} (mW/cm^2)	3.80					
	p_r at z_{pii} (MPa)	3.11					
Operating control conditions	Acoustic power	100%	100%		100%		100%
	Display depth	13cm	13cm		13cm		13cm
	B Focus Position	1.0cm	6.0cm		6.0cm		6.0cm
	Color Sampling Gate Position	1.0cm	6.0cm		6.0cm		6.0cm
	B Working Frequency	Res	Pen		Pen		Pen
	C Working Frequency	Pen	Gen		Gen		Pen
	B PRF	2073	1587		1587		1369
	Color PRF	5446	4127		4127		3561

Transducer Model: P10-4s

Imaging Mode: Color+B+PW-Mode/Power+B+PW-Mode //TVI+B+TVD/ TEI+B+TVD

Index label		MI	TIS		TIB		TIC
			At surface	Below surface	At surface	Below surface	
Maximum index value		1.10	1.71		2.30		2.26
Index component value			1.71	1.48	1.79	2.30	
Acoustic Parameters	$p_{r,\alpha}$ at z_{MI} (MPa)	2.35					
	P (mW)		65.84		65.84		65.84
	$P_{1\times1}$ (mW)		63.16		65.84		
	z_s (cm)			1.10			
	z_b (cm)					2.05	
	z_{MI} (cm)	1.11					
	$z_{pii,\alpha}$ (cm)	1.11					
	f_{awf} (MHz)	4.59	5.92		5.92		5.92
Other Information	prr (Hz)	400.00					
	srr (Hz)	6.00					
	n_{pps}	1.07					
	$I_{pa,\alpha}$ at $z_{pii,\alpha}$ (W/cm^2)	231.03					
	$I_{spta,\alpha}$ at $z_{pii,\alpha}$ or $z_{sii,\alpha}$ (mW/cm^2)	1.76					
	I_{spta} at z_{pii} or z_{sii} (mW/cm^2)	2.56					
	p_r at z_{pii} (MPa)	2.75					
Operating control conditions	Acoustic power	100%	100%		100%		100%
	Display depth	13cm	13cm		13cm		13cm
	B Focus Position	2.0cm	4.5cm		3.0cm		4.5cm
	Color SG Position	2.0cm	4.5cm		3.0cm		4.5cm
	PW SV Position	2.0cm	4.5cm		3.0cm		4.5cm
	B Working Frequency	HRes	Gen		Pen		Gen
	C Working Frequency	Pen	Res		Pen		Res
	PW Working Frequency	Pen	Res		Pen		Res
	B PRF	400	417		441		417
	C PRF	1094	1042		1207		1042
	PW PRF	4484	4504		4477		4504
	PW SV	0.5mm	0.5mm		0.5mm		0.5mm

Transducer Model: P10-4s

Imaging Mode: CM/ TVM / B+CM/B+TVM

Index label		MI	TIS		TIB		TIC
			At surface	Below surface	At surface	Below surface	
Maximum index value		0.93	0.28		0.41		0.34
Index component value			0.28	0.17	0.30	0.41	
Acoustic Parameters	$p_{r,\alpha}$ at z_{MI} (MPa)	2.10					
	P (mW)		11.07		11.07		11.07
	$P_{1\times1}$ (mW)		10.57		11.07		
	z_s (cm)			1.44			
	z_b (cm)					1.02	
	z_{MI} (cm)	0.50					
	$z_{pii,\alpha}$ (cm)	0.50					
	f_{awf} (MHz)	5.09	5.89		5.89		5.89
Other Information	prr (Hz)	1,333.00					
	srr (Hz)	/					
	n_{pps}	/					
	$I_{pa,\alpha}$ at $z_{pii,\alpha}$ (W/cm^2)	189.18					
	$I_{spta,\alpha}$ at $z_{pii,\alpha}$ or $z_{sii,\alpha}$ (mW/cm^2)	178.99					
	I_{spta} at z_{pii} or z_{sii} (mW/cm^2)	213.39					
	p_r at z_{pii} (MPa)	2.29					
Operating control conditions	Acoustic power	100%	100%		100%		100%
	Display depth	3.5cm	13cm		3.5cm		13cm
	M Focus Position	1.0cm	5.5cm		1.0cm		5.5cm
	CM Focus Position	1.0cm	5.5cm		1.0cm		5.5cm
	M Working Frequency	HPen	Gen		Gen		Pen
	CM Working Frequency	Gen	Res		Gen		Res
	M PRF	83	125		125		125
	CM PRF	1333	2000		2000		2000

Transducer Model: P10-4s

Imaging Mode: CW-mode

Index label		MI	TIS		TIB		TIC
			At surface	Below surface	At surface	Below surface	
Maximum index value		0.05	0.85		1.57		1.42
Index component value			0.85	0.60	1.42	1.57	
Acoustic Parameters	$p_{r,\alpha}$ at z_{MI} (MPa)	0.11					
	P (mW)		35.80		35.80		35.80
	$P_{1\times1}$ (mW)		35.80		35.80		
	z_s (cm)			1.03			
	z_b (cm)					1.84	
	z_{MI} (cm)	2.30					
	$z_{pii,\alpha}$ (cm)	2.30					
	f_{awf} (MHz)	5.00	5.00		5.00		5.00
Other Information	*prr* (Hz)	/					
	srr (Hz)	/					
	n_{pps}	/					
	$I_{pa,\alpha}$ at $z_{pii,\alpha}$ (W/cm^2)	0.38					
	$I_{spta,\alpha}$ at $z_{pii,\alpha}$ or $z_{sii,\alpha}$ (mW/cm^2)	381.62					
	I_{spta} at z_{pii} or z_{sii} (mW/cm^2)	883.22					
	p_r at z_{pii} (MPa)	0.15					
Operating control conditions	Acoustic power	100%	100%		100%		100%
	Display depth	5cm	5cm		5cm		5cm
	Focus position	3.0cm	3.0cm		3.0cm		3.0cm
	Working Frequency	5	5		5		5

J.15 SP5-11s

Transducer Model: SP5-1s

Imaging Mode: M-mode

Index label		MI	TIS		TIB		TIC
			At surface	Below surface	At surface	Below surface	
Maximum index value		1.53	0.10		0.96		0.24
Index component value			0.06	0.10	0.27	0.96	
Acoustic Parameters	$p_{r,\alpha}$ at z_{MI} (MPa)	2.11					
	P (mW)		16.72		16.72		16.72
	$P_{1\times1}$ (mW)		6.91		8.64		
	z_s (cm)			2.70			
	z_b (cm)					5.45	
	z_{MI} (cm)	0.50					
	$z_{pii,\alpha}$ (cm)	0.50					
	f_{awf} (MHz)	1.89	1.76		1.76		1.76
Other Information	prr (Hz)	1,000.00					
	srr (Hz)	/					
	n_{pps}	/					
	$I_{pa,\alpha}$ at $z_{pii,\alpha}$ (W/cm^2)	161.11					
	$I_{spta,\alpha}$ at $z_{pii,\alpha}$ or $z_{sii,\alpha}$ (mW/cm^2)	154.14					
	I_{spta} at z_{pii} or z_{sii} (mW/cm^2)	164.56					
	p_r at z_{pii} (MPa)	2.18					
Operating control conditions	Acoustic power	100%	100%		100%		100%
	Display depth	5cm	21cm		21cm		21cm
	Focus position	1.0cm	9.0cm		7.0cm		9.0cm
	Working Frequency	HRes	HGen		HGen		HGen
	PRF	1000	2000		2000		2000

Transducer Model: SP5-1s

Imaging Mode: B-mode

Index label		MI	TIS		TIB		TIC
			At surface	Below surface	At surface	Below surface	
Maximum index value		1.47	0.66		1.55		1.47
Index component value			0.66	0.66	1.55	0.66	
Acoustic Parameters	$p_{r,\alpha}$ at z_{MI} (MPa)	2.05					
	P (mW)		103.40		103.40		103.40
	$P_{1\times1}$ (mW)		47.49		47.49		
	z_s (cm)			/			
	z_b (cm)					/	
	z_{MI} (cm)	0.50					
	$z_{pii,\alpha}$ (cm)	0.50					
	f_{awf} (MHz)	1.94	2.93		2.93		2.93
Other Information	*prr* (Hz)	3,193.00					
	srr (Hz)	38.00					
	n_{pps}	2.00					
	$I_{pa,\alpha}$ at $z_{pii,\alpha}$ (W/cm^2)	134.45					
	$I_{spta,\alpha}$ at $z_{pii,\alpha}$ or $z_{sii,\alpha}$ (mW/cm^2)	12.68					
	I_{spta} at z_{pii} or z_{sii} (mW/cm^2)	13.56					
	p_r at z_{pii} (MPa)	2.12					
Operating control conditions	Acoustic power	100%	100%		100%		100%
	Display depth	21cm	21cm		21cm		21cm
	Focus position	1.0cm	8.0cm		8.0cm		9.0cm
	Working Frequency	Pen	Pen		Pen		HGen
	PRF	3193	3193		3193		3193

Transducer Model: SP5-1s

Imaging Mode: B+M-mode

Index label		MI	TIS		TIB		TIC
			At surface	Below surface	At surface	Below surface	
Maximum index value		1.51	0.79		0.98		1.71
Index component value			0.76	0.79	0.76	0.98	
Acoustic Parameters	$p_{r,\alpha}$ at z_{MI} (MPa)	2.10					
	P (mW)		119.72		119.72		119.72
	$P_{1\times1}$ (mW)		54.99		54.99		
	z_s (cm)			2.65			
	z_b (cm)					5.48	
	z_{MI} (cm)	0.50					
	$z_{pii,\alpha}$ (cm)	0.50					
	f_{awf} (MHz)	1.95	2.91		2.91		2.91
Other Information	*prr* (Hz)	2,000.00					
	srr (Hz)	23.00					
	n_{pps}	2.17					
	$I_{pa,\alpha}$ at $z_{pii,\alpha}$ (W/cm^2)	146.60					
	$I_{spta,\alpha}$ at $z_{pii,\alpha}$ or $z_{sii,\alpha}$ (mW/cm^2)	8.29					
	I_{spta} at z_{pii} or z_{sii} (mW/cm^2)	8.86					
	p_r at z_{pii} (MPa)	2.17					
Operating control conditions	Acoustic power	100%	100%		100%		100%
	Display depth	21cm	21cm		21cm		21cm
	B/M Focus position	1.0cm	8.0cm		8.0cm		9.0cm
	B/M Working Frequency	Pen	Pen		Pen		Pen
	B PRF	2000	2000		2000		2000
	M PRF	500	500		500		500

Transducer Model: SP5-1s

Imaging Mode: PW-mode/TVD-mode

Index label		MI	TIS		TIB		TIC
			At surface	Below surface	At surface	Below surface	
Maximum index value		1.39	0.81		4.29		1.40
Index component value			0.81	0.73	1.62	4.29	
Acoustic Parameters	$p_{r,\alpha}$ at z_{MI} (MPa)	1.96					
	P (mW)		80.50		80.50		80.50
	$P_{1\times1}$ (mW)		63.89		63.89		
	z_s (cm)			1.83			
	z_b (cm)					2.22	
	z_{MI} (cm)	0.67					
	$z_{pii,\alpha}$ (cm)	0.67					
	f_{awf} (MHz)	1.98	2.67		2.67		2.67
Other Information	prr (Hz)	699.00					
	srr (Hz)	/					
	n_{pps}	/					
	$I_{pa,\alpha}$ at $z_{pii,\alpha}$ (W/cm^2)	142.77					
	$I_{spta,\alpha}$ at $z_{pii,\alpha}$ or $z_{sii,\alpha}$ (mW/cm^2)	186.19					
	I_{spta} at z_{pii} or z_{sii} (mW/cm^2)	203.96					
	p_r at z_{pii} (MPa)	2.05					
Operating control conditions	Acoustic power	100%	100%		100%		100%
	Display depth	5cm	21cm		21cm		21cm
	SV Position	1.0cm	3.0cm		4.0cm		10.0cm
	Working Frequency	Pen	Res		Gen		Gen
	PRF	699	5699		11997		5699
	SV	0.5mm	0.5mm		0.5mm		0.5mm

Transducer Model: SP5-1s

Imaging Mode: B+PW-mode/B+TVD-mode

Index label		MI	TIS		TIB		TIC
			At surface	Below surface	At surface	Below surface	
Maximum index value		1.25	1.10		1.15		2.60
Index component value			1.06	1.10	1.15	1.15	
Acoustic Parameters	$p_{r,\alpha}$ at z_{MI} (MPa)	1.75					
	P (mW)		167.18		104.20		167.18
	$P_{1\times1}$ (mW)		89.51		82.70		
	z_s (cm)			2.22			
	z_b (cm)					4.28	
	z_{MI} (cm)	0.94					
	$z_{pii,\alpha}$ (cm)	0.94					
	f_{awf} (MHz)	1.94	2.92		2.92		2.92
Other Information	prr (Hz)	393.00					
	srr (Hz)	7.00					
	n_{pps}	1.43					
	$I_{pa,\alpha}$ at $z_{pii,\alpha}$ (W/cm^2)	106.35					
	$I_{spta,\alpha}$ at $z_{pii,\alpha}$ or $z_{sii,\alpha}$ (mW/cm^2)	1.83					
	I_{spta} at z_{pii} or z_{sii} (mW/cm^2)	2.13					
	p_r at z_{pii} (MPa)	1.83					
Operating control conditions	Acoustic power	100%	100%		100%		100%
	Display depth	21cm	21cm		21cm		21cm
	B Focus Position	2.0cm	8.0cm		4.0cm		9.0cm
	SV Position	2.0cm	8.0cm		4.0cm		9.0cm
	B Working Frequency	Pen	Pen		HPen		HGen
	PW Working Frequency	Pen	Pen		Gen		Gen
	B PRF	393	2799		311		393
	PW PRF	4989	699		4989		4989
	PW SV	0.5mm	0.5mm		0.5mm		0.5mm

Transducer Model: SP5-1s

Imaging Mode: Color+B-Mode / Power+B-Mode /TVI+B/TEI+B

Index label		MI	TIS		TIB		TIC
			At surface	Below surface	At surface	Below surface	
Maximum index value		1.46	1.09		1.09		2.82
Index component value			1.09	1.09	1.09	1.09	
Acoustic Parameters	$p_{r,\alpha}$ at z_{MI} (MPa)	2.02					
	P (mW)		159.80		159.80		159.80
	$P_{1\times1}$ (mW)		84.89		84.89		
	z_s (cm)			/			
	z_b (cm)					/	
	z_{MI} (cm)	0.50					
	$z_{pii,\alpha}$ (cm)	0.50					
	f_{awf} (MHz)	1.92	2.90		2.90		2.90
Other Information	prr (Hz)	902.00					
	srr (Hz)	14.00					
	n_{pps}	1.19					
	$I_{pa,\alpha}$ at $z_{pii,\alpha}$ (W/cm^2)	133.21					
	$I_{spta,\alpha}$ at $z_{pii,\alpha}$ or $z_{sii,\alpha}$ (mW/cm^2)	4.67					
	I_{spta} at z_{pii} or z_{sii} (mW/cm^2)	4.99					
	p_r at z_{pii} (MPa)	2.09					
Operating control conditions	Acoustic power	100%	100%		100%		100%
	Display depth	21cm	21cm		21cm		21cm
	B Focus Position	1.0cm	8.0cm		8.0cm		6.0cm
	Color Sampling Gate Position	1.0cm	8.0cm		8.0cm		6.0cm
	B Working Frequency	Pen	Pen		Pen		HRes
	C Working Frequency	Pen	Res		Res		Pen
	B PRF	902	1795		1795		902
	Color PRF	1490	2667		2667		1490

Transducer Model: SP5-1s

Imaging Mode: Color+B+PW-Mode/Power+B+PW-Mode //TVI+B+TVD/ TEI+B+TVD

Index label		MI	TIS		TIB		TIC
			At surface	Below surface	At surface	Below surface	
Maximum index value		1.47	1.05		2.41		2.02
Index component value			1.05	1.04	0.77	2.41	
Acoustic Parameters	$p_{r,\alpha}$ at z_{MI} (MPa)	2.05					
	P (mW)		118.96		118.96		118.96
	$P_{1\times1}$ (mW)		94.41		70.21		
	z_s (cm)			1.72			
	z_b (cm)					2.17	
	z_{MI} (cm)	0.50					
	$z_{pii,\alpha}$ (cm)	0.50					
	f_{awf} (MHz)	1.94	2.66		2.66		2.66
Other Information	prr (Hz)	443.00					
	srr (Hz)	8.00					
	n_{pps}	1.07					
	$I_{pa,\alpha}$ at $z_{pii,\alpha}$ (W/cm^2)	134.27					
	$I_{spta,\alpha}$ at $z_{pii,\alpha}$ or $z_{sii,\alpha}$ (mW/cm^2)	2.65					
	I_{spta} at z_{pii} or z_{sii} (mW/cm^2)	2.83					
	p_r at z_{pii} (MPa)	2.12					
Operating control conditions	Acoustic power	100%	100%		100%		100%
	Display depth	21cm	21cm		21cm		21cm
	B Focus Position	1.0cm	2.0cm		8.0cm		8.0cm
	Color SG Position	1.0cm	2.0cm		8.0cm		8.0cm
	PW SV Position	1.0cm	2.0cm		8.0cm		8.0cm
	B Working Frequency	Pen	Gen		HPen		HRes
	C Working Frequency	Pen	Pen		Res		Pen
	PW Working Frequency	Pen	Gen		Gen		Gen
	B PRF	443	443		287		294
	C PRF	583	583		494		507
	PW PRF	4599	4599		4598		4585
	PW SV	0.5mm	0.5mm		0.5mm		0.5mm

Transducer Model: SP5-1s

Imaging Mode: CM/ TVM / B+CM/B+TVM

Index label		MI	TIS		TIB		TIC
			At surface	Below surface	At surface	Below surface	
Maximum index value		1.27	0.49		2.04		1.10
Index component value			0.39	0.49	0.65	2.04	
Acoustic Parameters	$p_{r,\alpha}$ at z_{MI} (MPa)	1.77					
	P (mW)		71.39		71.39		71.39
	$P_{1\times1}$ (mW)		34.38		56.66		
	z_s (cm)			3.09			
	z_b (cm)					6.23	
	z_{MI} (cm)	0.50					
	$z_{pii,\alpha}$ (cm)	0.50					
	f_{awf} (MHz)	1.94	2.43		2.43		2.43
Other Information	prr (Hz)	125.00					
	srr (Hz)	/					
	n_{pps}	/					
	$I_{pa,\alpha}$ at $z_{pii,\alpha}$ (W/cm^2)	98.63					
	$I_{spta,\alpha}$ at $z_{pii,\alpha}$ or $z_{sii,\alpha}$ (mW/cm^2)	10.20					
	I_{spta} at z_{pii} or z_{sii} (mW/cm^2)	10.91					
	p_r at z_{pii} (MPa)	1.83					
Operating control conditions	Acoustic power	100%	100%		100%		100%
	Display depth	5cm	21cm		5cm		21cm
	M Focus Position	1.0cm	16.0cm		1.0cm		16.0cm
	CM Focus Position	1.0cm	16.0cm		1.0cm		16.0cm
	M Working Frequency	Pen	Pen		HPen		HRes
	CM Working Frequency	Res	Res		Res		Res
	M PRF	125	125		500		125
	CM PRF	1625	1625		6500		1625

Transducer Model: SP5-1s

Imaging Mode: CW-mode

Index label		MI	TIS		TIB		TIC
			At surface	Below surface	At surface	Below surface	
Maximum index value		0.08	0.98		3.77		2.69
Index component value			0.98	0.95	2.69	3.77	
Acoustic Parameters	$p_{r,\alpha}$ at z_{MI} (MPa)	0.11					
	P (mW)		130.11		130.11		130.11
	$P_{1\times1}$ (mW)		103.26		103.26		
	z_s (cm)			1.92			
	z_b (cm)					3.46	
	z_{MI} (cm)	3.46					
	$z_{pii,\alpha}$ (cm)	3.46					
	f_{awf} (MHz)	2.00	2.00		2.00		2.00
Other Information	prr (Hz)	/					
	srr (Hz)	/					
	n_{pps}	/					
	$I_{pa,\alpha}$ at $z_{pii,\alpha}$ (W/cm^2)	0.44					
	$I_{spta,\alpha}$ at $z_{pii,\alpha}$ or $z_{sii,\alpha}$ (mW/cm^2)	440.05					
	I_{spta} at z_{pii} or z_{sii} (mW/cm^2)	728.25					
	p_r at z_{pii} (MPa)	0.15					
Operating control conditions	Acoustic power	100%	100%		100%		100%
	Display depth	5.0cm	5.0cm		5.0cm		5.0cm
	Focus position	4.0cm	4.0cm		4.0cm		4.0cm
	Working Frequency	2	2		2		2