VeLED E5
VeLED E5W
VeLED E5M
VeLED E3W
VeLED E3M

LED Examination Lights

Operator's Manual

© Copyright 2025 Shenzhen Mindray Animal Medical Technology Co., Ltd. All rights reserved.

Release time: 2025-01

Revision: 1.0

IMPORTANT!

The product is for veterinary use only.

Intellectual Property Statement

Shenzhen Mindray Animal Medical Technology CO., Ltd. (hereinafter called Mindray Animal Medical) owns the intellectual property rights to this Mindray device and this manual. This manual may refer to information protected by copyrights or patents and does not convey any license under the patent rights or copyright of Mindray Animal Medical, or of others.

Mindray Animal Medical intends to maintain the contents of this manual as confidential information. Disclosure of the information in this manual in any manner whatsoever without the written permission of Mindray Animal Medical is strictly forbidden.

Release, amendment, reproduction, distribution, rental, adaption and translation or any other derivative work of this manual in any manner whatsoever without the written permission of Mindray Animal Medical is strictly forbidden.

mindray, MINDRAY, MINDRAY, are the registered trademarks or trademarks owned by Shenzhen Mindray Bio-Medical Electronics Co., Ltd. All other trademarks that appear in this manual are used only for editorial purposes without the intention of improperly using them. They are the property of their respective owners.

Responsibility on the Manufacturer Party

Contents of this manual are subject to changes without prior notice.

All information contained in this manual is believed to be correct. Mindray Animal Medical shall not be liable for errors contained herein nor for incidental or consequential damages in connection with the furnishing, performance, or use of this manual.

Mindray Animal Medical is responsible for the effects on safety, reliability and performance of this product, only if:

- all installation operations, expansions, changes, modifications and repairs of this product are conducted by Mindray Animal Medical authorized personnel;
- the electrical installation of the relevant room complies with the applicable national and local requirements;
- the product is used in accordance with the instructions for use.

WARNING

- **This equipment must be operated by skilled/trained clinical professionals.**
- **It is important for the hospital or organization that employs this equipment to carry out a reasonable service/maintenance plan. Neglect of this may result in machine breakdown or personal injury.**

Warranty

THIS WARRANTY IS EXCLUSIVE AND IS IN LIEU OF ALL OTHER WARRANTIES, EXPRESSED OR IMPLIED, INCLUDING WARRANTIES OF MERCHANTABILITY OR FITNESS FOR ANY PARTICULAR PURPOSE.

Exemptions

Mindray Animal Medical's obligation or liability under this warranty does not include any transportation or other charges or liability for direct, indirect or consequential damages or delay resulting from the improper use or application of the device or the use of parts or accessories not approved by Mindray Animal Medical or repairs by people other than Mindray Animal Medical authorized personnel.

This warranty shall not extend to

- Malfunction or damage caused by improper use or man-made failure.
- Malfunction or damage caused by unstable or out-of-range power input.
- Malfunction or damage caused by force majeure such as fire and earthquake.
- Malfunction or damage caused by improper operation or repair by unqualified or unauthorized service people.
- Malfunction of the instrument or part whose serial number is not legible enough.
- Others not caused by instrument or part itself.

Company Contact

Manufacturer:	Shenzhen Mindray Animal Medical Technology Co., Ltd.
Address:	Room 702, Tower 4, YESUN Intelligent Community III, No.1301-88 Guanguang Road, Xinlan Community, Guanlan Street, Longhua District, Shenzhen 518110, P.R.China
Website:	www.mindrayanimal.com
E-mail Address:	service@mindrayanimal.com
Tel:	+86 755-33997000

Preface

Manual Purpose

This manual contains the instructions necessary to operate the product safely and in accordance with its function and intended use. Observance of this manual is a prerequisite for proper product performance and correct operation and ensures animal and operator safety.

This manual is based on the maximum configuration and therefore some contents may not apply to your product. If you have any question, please contact us.

This manual is an integral part of the product. It should always be kept close to the equipment so that it can be obtained conveniently when needed.

Intended Audience

This manual is geared for clinical professionals who are expected to perform daily operations of the product, maintain and troubleshoot the product and learn how to use the product.

Illustrations

All illustrations in this manual serve as examples only. They may not necessarily reflect the setup or data displayed on your equipment.

Conventions

- ***Italic text*** is used in this manual to quote the referenced chapters or sections.
- ***Bold text*** is used to indicate the screen texts.
- → is used to indicate operational procedures.

This page intentionally left blank.

Contents

1 Safety ..... 1 - 1

1.1 Safety Information ..... 1 - 1

1.1.1 Warning ..... 1 - 1

1.1.2 Caution ..... 1 - 4

1.1.3 Note ..... 1 - 4

1.2 Equipment Symbols ..... 1 - 5

2 Equipment Introduction ..... 2 - 1

2.1 Intended Use ..... 2 - 1

2.1.1 Intended Purpose ..... 2 - 1

2.1.2 Intended Users ..... 2 - 1

2.1.3 Intended Animal Population ..... 2 - 1

2.1.4 Intended Medical Conditions ..... 2 - 1

2.1.5 Contra-indications ..... 2 - 1

2.1.6 Side-effects ..... 2 - 1

2.2 Main Components ..... 2 - 3

3 Daily Operations ..... 3 - 1

3.1 Preparations ..... 3 - 1

3.2 VeLED E5 / VeLED E5W / VeLED E3W ..... 3 - 1

3.3 VeLED E5M / VeLED E3M ..... 3 - 1

3.3.1 Warning Label (VeLED E5M / VeLED E3M) ..... 3 - 4

3.4 Using Lighthead ..... 3 - 5

3.4.1 Installing/Removing Sterilizable Handle ..... 3 - 5

3.4.2 Adjusting Lighthead Position ..... 3 - 6

3.4.3 Adjusting Single-functional Handle (Optional) ..... 3 - 8

3.4.4 Using Touch Keypad ..... 3 - 9

3.4.5 Using Backup Power Supply (Optional) ..... 3 - 10

4 Cleaning and Disinfection ..... 4 - 1

4.1 Safety Information ..... 4 - 1

4.2 Cleaning ..... 4 - 2

4.2.1 Preparation before Cleaning ..... 4 - 2

4.2.2 Cleaning Procedure ..... 4 - 2

4.3 Disinfection ..... 4 - 3

4.3.1 Recommended Disinfectants ..... 4 - 3

4.3.2 Disinfection ..... 4 - 5

4.4 Sterilization of Sterilizable Handle ..... 4 - 6

5 Maintenance ..... 5 - 1

5.1 Maintenance Safety Information ..... 5 - 1

5.2 Maintenance Schedule ..... 5 - 2
5.3 Maintaining Backup Power Supply (Optional) ..... 5 - 3
5.3.1 Maintenance Period ..... 5 - 3
5.3.2 Maintenance Method ..... 5 - 3
5.4 Adjusting Spring Arm ..... 5 - 4
5.5 Disposal ..... 5 - 6

6 Troubleshooting ..... 6 - 1
6.1 Common Error ..... 6 - 1

A Product Specifications ..... A - 1
A.1 Safety SpecificationsProduct Classification ..... A - 1
A.1.1 Environmental Specifications ..... A - 1
A.2 Power Supply Specifications ..... A - 2
A.2.1 Power Supply ..... A - 2
A.2.2 Input Power ..... A - 2
A.2.3 Lighthead Power ..... A - 3
A.2.4 Power Consumption of All Light Sources ..... A - 3
A.2.5 Fuse ..... A - 3
A.2.6 Battery Module ..... A - 3
A.3 Optical Performance ..... A - 5
A.4 Degree of Rotation/Reach ..... A - 7

B Accessories and Parts List ..... B - 1

D EMC ..... D - 1

1 Safety

1.1 Safety Information

WARNING

- **Indicates a potential hazard or unsafe practice that, if not avoided, could result in death or serious injury.**

CAUTION

- **Indicates a potential hazard or unsafe practice that, if not avoided, could result in minor personal injury or product/property damage.**

NOTE

- **Provides application tips or other useful information to ensure that you get the most from your product.**

1.1.1 Warning

WARNING

- **The equipment is to be used for its intended purposes only. Do not use it for other purposes.**
- **The equipment is to be installed by personnel authorized by Mindray Animal Medical only.**
- **The equipment is to be operated by trained personnel only.**
- **Before using the equipment, be sure to read and fully understand this manual.**
- **Keep this manual in the vicinity of the equipment so that it can be obtained conveniently when needed.**
- **To avoid the risk of electric shock, the equipment must only be connected to a mains supply with protective earth.**
- **When installing the examination light, make sure that it is connected to a switch that can shut off the mains supply. This switch is not included in the examination light.**

- **Do not use the LED examination lights in an MRI environment.**
- **To avoid explosion hazard, do not use the equipment in the presence of oxygen-rich atmospheres, flammable anesthetics, or other flammable agents.**
- **Use and store the equipment within the specified temperature, humidity, and atmospheric pressure.**
- **Before putting the equipment into operation, the user must verify that the equipment, connecting cables and accessories are in correct working order and operating condition.**
- **Do not touch the animal and live parts simultaneously. Otherwise, animal injury may occur.**
- **Devices connected to the equipment must meet the requirements of the applicable IEC standards (e.g. IEC 62368-1 safety standards for audio/video, information and communication technology equipment and IEC 60601-1 safety standards for medical electrical equipment). The system configuration must meet the requirements of the IEC 60601-1 medical electrical systems standard. Any personnel who connect devices to the equipment's signal input/output port are responsible for providing evidence that the safety certification of the devices has been performed in accordance to the IEC 60601-1. If you have any questions, please contact Mindray Animal Medical.**
- **Be sure to operate the equipment as instructed in this manual. Warranty does not cover damage caused by non-compliance.**
- **Device service or maintenance should be completed by the authorized personnel only. Warranty does not cover damage caused by unapproved service or maintenance.**
- **Before maintaining or servicing the examination light, be sure to shut off the mains supply first.**
- **Be sure to only use accessories made by Mindray Animal Medical. Accessories produced by other manufacturers must not be used as they may cause personal injury. If accessories of other manufacturers must be used, their use should be expressly permitted by Mindray Animal Medical.**
- **Before using accessories, be sure to read the operator's manual thoroughly.**
- **Do not open the equipment housings.**
- **No modification of this device is allowed.**
- **Do not use agents containing alcohol where high-frequency equipment is being used. Neglect of this may cause fire hazard.**
- **There may be a risk of infection if the examination light is under the complicated and changeable medical conditions. Follow the hospital requirements and refer to "Cleaning and Disinfection" chapter to clean/disinfect the examination light.**

- **At the end of its service life, the equipment, as well as its accessories, must be disposed of in compliance with the local regulations. If you have any questions concerning disposal of the equipment, please contact Mindray Animal Medical.**
- **For disposal of parts and accessories, unless otherwise specified, follow local regulations regarding disposal of hospital waste.**
- **Dispose of the package material as per the applicable waste control regulations. Keep it out of children's reach.**
- **Make sure the electrical installation of building complies with the requirements of IEC 60364-7-710.**
- **When moving the examination light, be aware that your view of the area you are moving to may be obscured by the examination light. Carelessness when moving the unit can result in personal injury and/or device damage.**
- **When moving the lighthead, avoid collisions among the lighthead, arms (swivel arms / spring arms / flexible arms), and other devices or parts, which may cause personal injury and/or property damage.**
- **Do not place objects on the lightheads or the arms. Otherwise, these objects may fall off and cause personal injury and/or property damage.**
- **Do not direct the light source towards human eyes. Otherwise, it may cause personal injury.**
- **Long-time exposure to the light source may cause eye fatigue. Be sure to select a proper illuminance level for long-time surgeries.**
- **This product emits possibly hazardous optical radiation. Do not stare at the light emitted from the surgical luminaire. Eye injury may occur.**
- **Be sure to adjust the illuminance level based on the needs of the operation.**
- **After each sterilization and before each new use of the sterilizable handle, be sure to check if it has any sign of wear, such as cracking and color fading, and install it correctly until it clicks.**
- **Before connecting any equipment to the examination light, make sure the equipment is suitable for use within the animal environment.**
- **If an LED card is defective, be sure to contact the customer service department authorized by Mindray Animal Medical.**
- **Do not position the mobile examination light in the place where it is difficult to operate the disconnection device.**
- **The mobile examination light is disconnected from the mains power by means of detaching the plug. Do not locate the mobile light in a place where it is difficult to operate the mains plug.**
- **The examination light may be used together with other manufacturers' devices (e.g. displays). Be sure to refer to each manufacturer's instructions for how to use the device.**

1.1.2 Caution

CAUTION

- **Exercise caution when transporting or moving the equipment. Do not damage it during transportation or movement.**
- **Always install or carry the equipment or accessories properly to avoid damage caused by drop, impact, strong vibration or other mechanical force.**
- **Check the screws for components and parts regularly to prevent them falling off.**
- **Be sure to use spare parts supplied by Mindray Animal Medical only.**
- **The portable or mobile RF communication device can affect operation of medical devices. Make sure that the examination light is installed in a proper environment.**
- **Do not use cleaning solutions containing chloride ions. Otherwise, the device may be damaged.**
- **Use of spare parts other than those supplied by Mindray Animal Medical, especially such electrical parts as cables, batteries, bulbs, may compromise EMC performance of the examination light.**

1.1.3 Note

NOTE

- **Contents of this manual are based on the full configuration of the examination light. Some of them may not apply to your operatinglight. Use your light according to the actual configuration. If you have any questions, contact the customer service department authorized by Mindray Animal Medical or your local distributor.**
- **Training materials are available. Be sure to contact Mindray Animal Medical or your local distributor for them.**
- **The software was developed in compliance with IEC 62304. The possibility of hazards arising from software errors is minimized.**
- **The equipment software copyright is solely owned by Mindray Animal Medical. No organization or individual shall resort to modifying, copying, or exchanging it or to any other infringement on it in any form or by any means without due permission.**
- **Batteries are recommended to be replaced regularly. The battery must only be replaced by personnel authorized by Mindray Animal Medical.**
- **The optical radiation emitted by this product complies with the exposure limits for reducing the risk of photobiological hazards in IEC 60601-2-41.**

1.2 Equipment Symbols

Some symbols may not appear on your equipment.

Symbol	Description	Symbol	Description
	Refer to instruction manual/booklet		Caution
	Protective earth (ground)		Earth (ground)
	Alternating current		Direct current
	On/Off		Battery indicator
	Input		Stand-by
SN	Serial number		Manufacturer
	Date of manufacture		Anti-static
	This way up		Keep dry
	Fragile, handle with care		Stacking limit by number
	Do not roll		Temperature limit

Symbol	Description	Symbol	Description
	Humidity limitation		Atmospheric pressure limitation
	Recyclable		CE marking
	The following definition of the WEEE label applies to EU member states only: the use of this symbol indicates that waste electrical and electronic equipment must not be disposed of as unsorted municipal waste and must be collected separately. By ensuring that this product is disposed of correctly, you will help prevent bringing potential negative consequences to the environment and human health. For more detailed information with regard to returning and recycling this product, please consult the distributor from whom you purchased the product.		

The general meanings assigned to the geometric shape, safety color and contrast color for the safety sign are as follows:

Geometric shape	Meaning	Safety color	Contrast color	Graphical symbol color
	Mandatory action	Blue	White	White

This page intentionally left blank.

2 Equipment Introduction

2.1 Intended Use

2.1.1 Intended Purpose

The LED examination light and LED examination light (mobile) are intended for the diagnosis, treatment or examination procedure in the operating room, treatment room, recovery room, induction room and so on.

2.1.2 Intended Users

The device may only be operated by medically trained staff.

2.1.3 Intended Animal Population

The LED examination light and LED examination light (mobile) are intended for animals who are in examination /treatment procedures.

2.1.4 Intended Medical Conditions

The device is to be used in healthcare facilities by clinical professionals or under their guidance.
It is not intended for home use.

2.1.5 Contra-indications

None.

2.1.6 Side-effects

According to the conclusion of clinical evaluation and residual risk evaluation, for the intended animals, there are no known side effects that can occur during or after the use of the medical device. And there is no need for the operator to make extra preparations. Thus, no residual risk associated with using the medical device should be disclosed.

See the table below for all the available models and their configurations.

Model	Configuration
VeLED E5	Single lighthead
VeLED E5W	Single lighthead

Model	Configuration
VeLED E5M	Mobile
VeLED E3W	Single lighthead
VeLED E3M	Mobile

WARNING

- **Contents of this manual are based on the full configuration of the LED examination light. Some of them may not apply to your LED examination light. Use your examination light according to the actual configuration. If you have any questions, contact the customer service department authorized by Mindray Animal Medical or your local distributor.**

2.2 Main Components

The main components of LED examination lights are shown in the figures below.

■ VeLED E5

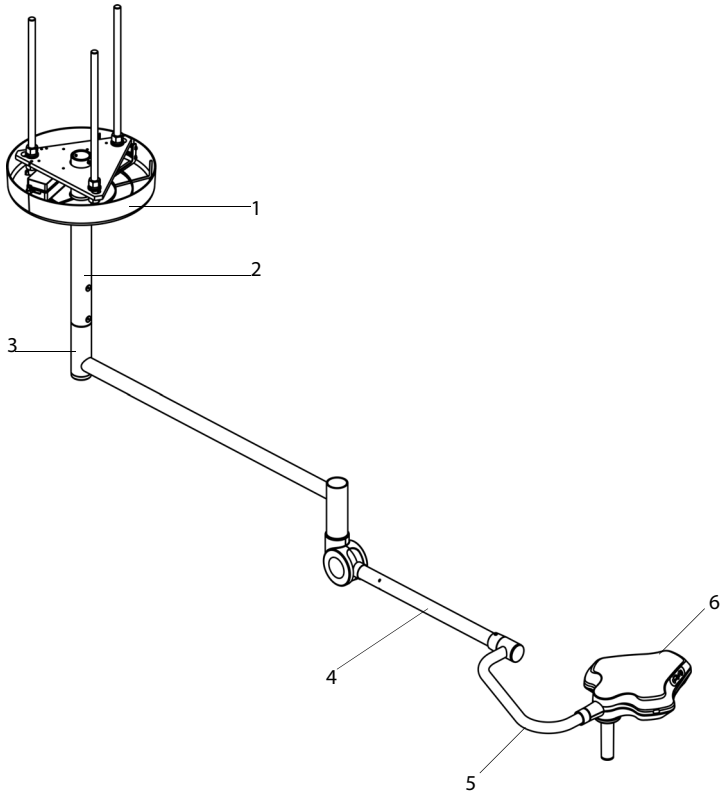

1. Ceiling cover
2. Flange tube
3. Swivel arm assembly
4. Spring arm
5. Gimbal joint
6. Lighthead

■ VeLED E5W

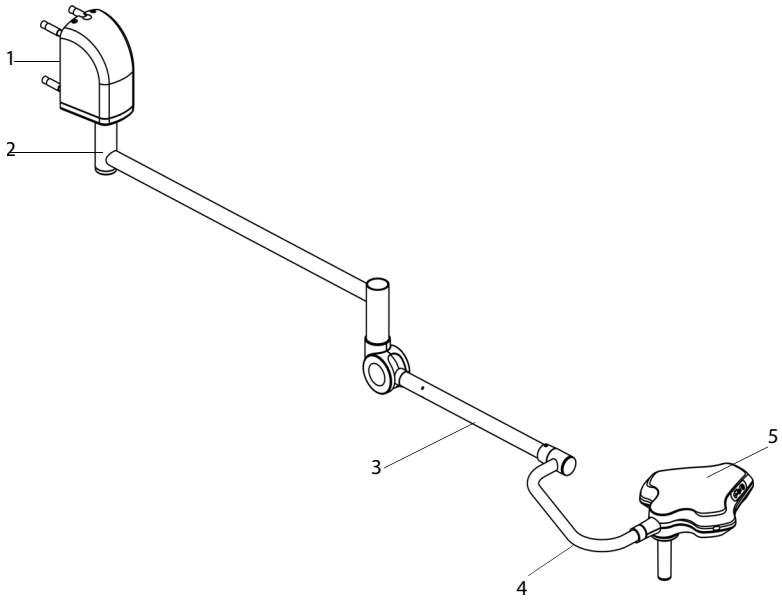

1. Base
2. Swivel arm assembly
3. Spring arm
4. Gimbal joint
5. Lighthead

■ VeLED E3W

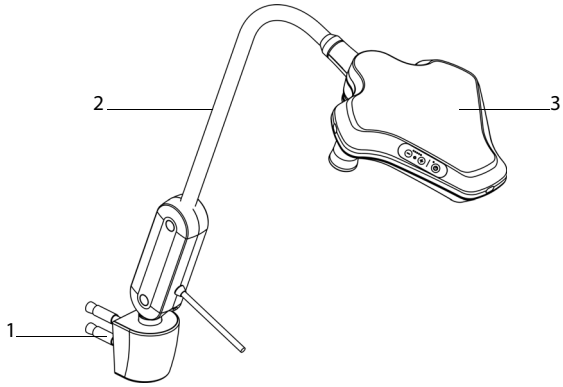

1. Base
2. Flexible arm
3. Lighthead

■ VeLED E5M

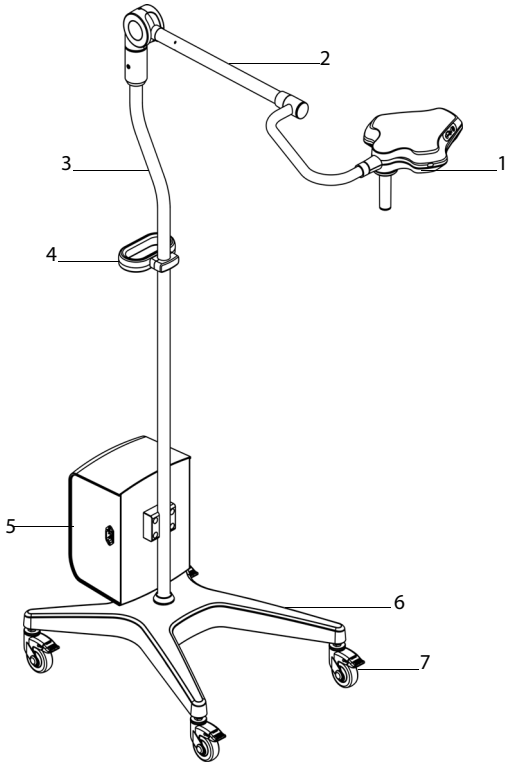

1. Lighthead
2. Gimbal joint
3. Spring arm
4. Pole
5. Handle
6. Battery module (optional)
7. Base
8. Castor

■ VeLED E3M

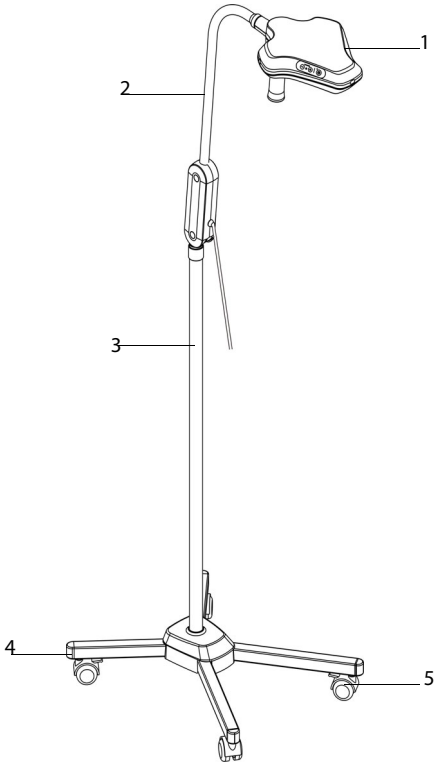

1. Lighthead
2. Flexible arm
3. Pole
4. Base
5. Castor

◆ VeLED E5 / VeLED E5W / VeLED E5M lighthead

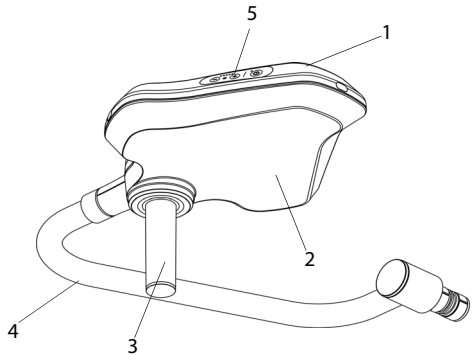

1. Lamp housing hood
2. Glass
3. Non-functional handle / Single-functional handle (optional)
4. Gimbal joint
5. Touch keypad

◆ VeLED E3W / VeLED E3M lighthead

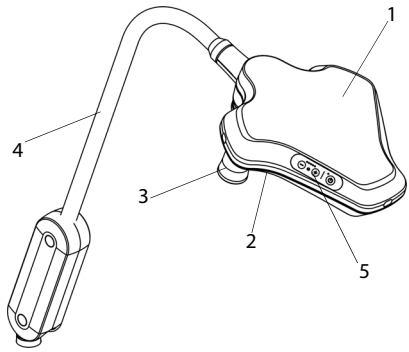

1. Lamp housing hood
2. Glass
3. Non-functional handle / Single-functional handle (optional)
4. Flexible arm

5. Touch keypad

* The sterilizable handle is optional for both the non-functional handle and the single-functional handle.

This page intentionally left blank.

3 Daily Operations

3.1 Preparations

Each time before using the LED examination light,

1. Make sure the sterilizable handle is sterilized. See chapter ***4.4 Sterilization of Sterilizable Handle*** for details.
2. Check and make sure:

- the indoor power supply is normal.
- the indoor temperature and humidity are in compliance with the operating conditions of the light.
- the arms (swivel arms / spring arms / flexible arms) and the lightheads are not damaged.
- the arms and the lightheads can stay at the desired positions.
- the lightheads function normally.
- the backup power supply (optional) is switched on.

3.2 VeLED E5 / VeLED E5W / VeLED E3W

The LED examination light is pre-wired and ready for use, as soon as the mains power is switched on.

3.3 VeLED E5M / VeLED E3M

Each time before using VeLED E5M,

1. Make sure the battery is charged, and the power supply is switched on.

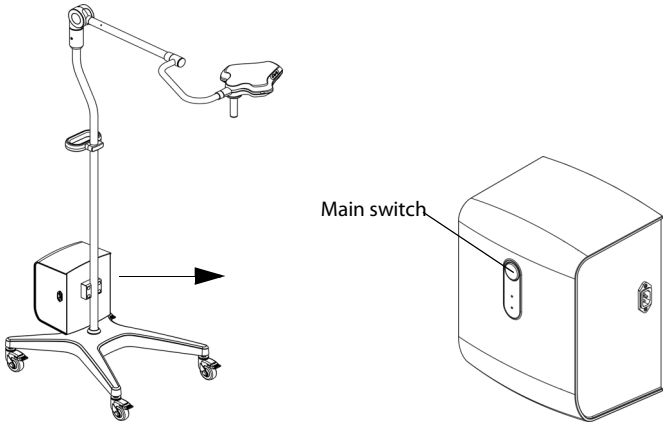

2. Lower the lighthead then slowly and carefully move the mobile light to the desired position.

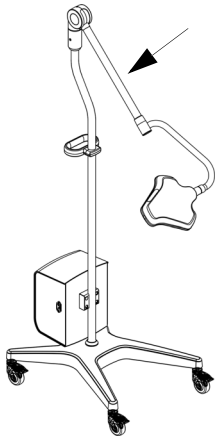

3. Lock the castors.

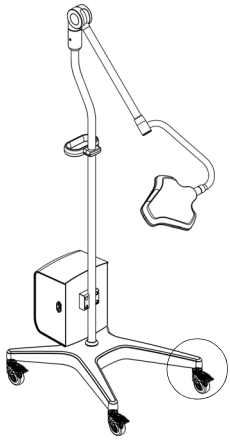

Each time before using VeLED E3M,

1. Slowly and carefully move the mobile light to the desired position.
2. Insert the plug into an electrical socket.
3. Lock the castors.

WARNING

- **Be sure to lock the castors before using the VeLED E5M / VeLED E3M examination light. Otherwise, the mobile light may slip and cause personal injury and/or property damage.**
- **Do not lean on the spring arm. Otherwise, the lighthead may swing and cause personal injury and/or property damage.**

3.3.1 Warning Label (VeLED E5M / VeLED E3M)

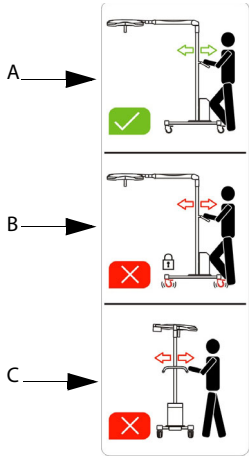

The warning labels mean:

A: The correct way to move the examination light. Be sure to use the handle on the pole to move the mobile examination light in the indicated direction when the castors are unlocked.

B: Do not move the mobile examination light when the castors are locked.

C: Do not try to move the mobile examination light by exerting force from either side.

WARNING

- **Be sure to tidy up the power cables in the process of moving and in the desired position. Otherwise, it may cause stumbling.**
- **When the mobile examination light is in the desired position, be sure to lock the castors before using the VeLED E5M / VeLED E3M examination light. Otherwise, the mobile light may slip and cause personal injury and/or property damage.**
- **Be sure to move the mobile examination light on smooth ground. Make sure the moving speed is not over the walking speed. Otherwise, it may cause personal injury and device damage.**

CAUTION

- **Do not stand on the base.**
- **Do not use the sterilizable handle to move the mobile examination light.**

3.4 Using Lighthead

You can:

1. Use the non-functional handle / single-functional handle to adjust the lighthead position.
2. Use the single-functional handle / touch keypad to operate the lighthead.

WARNING

- **Do not direct the light source towards human eyes. Otherwise, it may cause personal injury.**
- **Do not lean on the spring arm. Otherwise, the lighthead may swing and cause personal injury and/or property damage.**
- **Be sure to adjust the illuminance level based on the needs of the operation.**
- **Be sure to install the sterilizable handle to the lighthead before use.**
- **Make sure the sterilizable handle is sterilized each time before use.**
- **The sterilizable handle shall be used by sterile personnel only. Do not touch the area outside of the sterilizable handle when using it. Otherwise, it may cause infection.**
- **If the sterilizable handle falls off during the operation, it might infect the operative wound. Make sure the sterilizable handle is properly and reliably installed.**
- **Before using the sterilizable handle, make sure no water or liquid remains on the central handle.**
- **Make sure the sterilizable handle is sterilized each time after use.**

3.4.1 Installing/Removing Sterilizable Handle

Sterilizable handles include non-functional handle and single-functional handle, which are installed and removed in the same way.

To install the sterilizable handle:

1. Slide the sterilizable handle onto the central handle of the lighthead.
2. Push the sterilizable handle upward until it clicks.
3. Pull the sterilizable handle downward to make sure it is not loose.

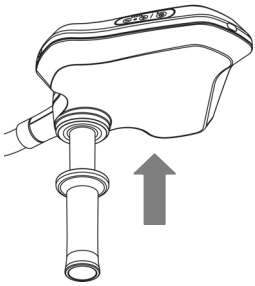

To remove the sterilizable handle:

1. Grab the lighthead with one hand.
2. Grab the handle with the other hand. Press the button (1) at the bottom and pull the handle downward.

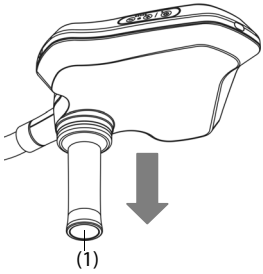

3.4.2 Adjusting Lighthead Position

The sterile person can only use the non-functional handle / single-functional handle to move the lighthead.

- VeLED E5 / VeLED E5W / VeLED E5M

■ VeLED E3W / VeLED E3M

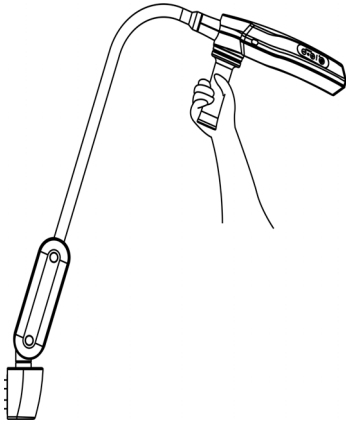

WARNING

- **Exercise caution when adjusting the lighthead position. Do not pull the spring arms beyond their limits.**
- **When moving the lighthead, avoid collisions among the lighthead, arms (swivel arms / spring arms / flexible arms), and other devices or parts, which may cause personal injury and/or property damage.**
- **To avoid the risk of infection, only the sterile personnel may touch the sterilizable handle during the operations.**

3.4.3 Adjusting Single-functional Handle (Optional)

3.4.3.1 Adjusting Illuminance

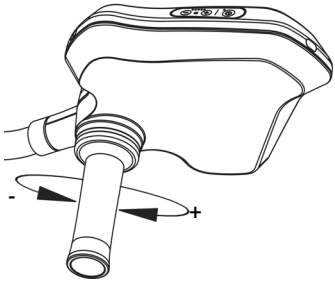

- Increase the illuminance : Rotate the handle counterclockwise (in the "+" direction).
  - Rotate the handle once, the illuminance increases by one level.
  - Rotate the handle continuously, the illuminance increases continuously.
  - When the illuminance reaches the maximum level, rotate the handle, the illuminance is unchanged.
- Decrease the illuminance: Rotate the handle clockwise (in the "-" direction).
  - Rotate the handle once, the illuminance decreases by one level.
  - Rotate the handle continuously, the illuminance decreases continuously.
  - When the illuminance decreases to the minimum level, rotate the handle, the illuminance is unchanged.

WARNING

- **The sterilizable handle shall be used by sterile personnel only. Do not touch the area outside of the sterilizable handle when using it. Otherwise, it may cause infection.**

3.4.4 Using Touch Keypad

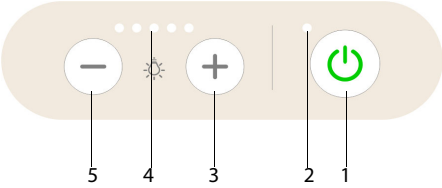

1. Standby
2. Power-on indicator
3. Illuminance up
4. Illuminance level indicator
5. Illuminance down

3.4.4.1 Turn on/off the Lighthead

- When the examination light is powered on, press (1) to turn on the lighthead and press (1) again to turn off the lighthead.
- Once the lighthead is turned on or off, the brightness will change smoothly.

NOTE

- **When turning the lighthead on after powering off, the lighthead will automatically remember the lighthead status before the last power-off.**

3.4.4.2 Adjusting the Illuminance

- Press (3) to increase the illuminance.
- Press (5) to decrease the illuminance.
- The illuminance is five-level adjustable. Check the illuminance level by the illuminance level indicators (4).

NOTE

- **The lighthead can automatically calculate a coefficient for illuminance compensation according to the service time and change of state, ensuring an effective illuminance in the life circle.**

3.4.4.3 Indicator Definitions

Indicator	State	Definition
Power-on indicator	Green	The examination light is AC powered.
	Orange and flashing	Voltage to the lighthead is too low.
	The power-on indicator is orange and flashing and illuminance level indicators are flashing.	Communication error of the examination light system.

3.4.5 Using Backup Power Supply (Optional)

CAUTION

- **Make sure the battery module is switched off if you have finished use for the day or you are not going to use it for several days (e.g. for weekends or holidays). Otherwise, the battery may be exhausted and damaged.**

NOTE

- **If the battery is low, please charge it in time.**

3.4.5.1 Battery Module for VeLED E5M

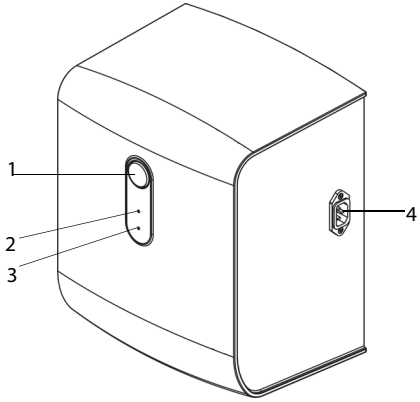

1. Main switch
2. AC indicator
3. Battery indicator
4. Power connector

1. To use the battery module, turn on the main switch.
2. To use the mains supply, connect the power connector to the mains supply and then turn on the main switch.
3. To charge the battery module, connect the power connector to the mains supply.
4. Check the working status of the battery module by the indicators. See the table below for details.

Indicator	State	Definition
AC indicator	Green	Mains supply is connected to the lighthead and functions normally.

Indicator	State	Definition
Battery indicator	Green and flashing	The battery is charging.
	Off	Charging is done.
	Green	The battery module powers the lighthead and functions normally.
	Orange and flashing	The battery is low.

4 Cleaning and Disinfection

4.1 Safety Information

The product must be cleaned and disinfected after every use or at least once a week.

WARNING

- **Use only Mindray Animal Medical approved cleaners and disinfectants and methods listed in this chapter to clean or disinfect your equipment. Warranty does not cover damage caused by unapproved substances or methods.**
- **Do not mix disinfecting solutions as hazardous gases may result.**
- **Do not use the ultraviolet disinfection method and the alcohol disinfectant at the same time, which may cause personal injury and/or property damage.**
- **We make no claims regarding the efficacy of the listed chemicals or methods as a means for controlling infection. For the method to control infection, consult your hospital's infection control officer or epidemiologist.**
- **Agents containing alcohol can form explosive vapor mixtures and ignite where high-frequency equipment is being used. Do not use the cleaners or disinfectants containing alcohol where high-frequency surgical equipment may be used.**
- **Always wear gloves for cleaning and disinfection. Neglect of this may cause infection.**
- **Be sure to disconnect the power supply before cleaning and disinfection.**
- **The responsible hospital or institution shall carry out all cleaning and disinfection procedures specified in this chapter.**

CAUTION

- **Do not clean/disinfect the examination light mechanically.**
- **Never immerse any part of the equipment or accessories in liquids.**
- **Particles of grime may become encapsulated and lead to the product not reaching the desired germ-reduction after disinfection. Before disinfection, the product must be cleaned thoroughly of contamination and encapsulated particles of grime and then be dried.**

- **Any contact of cleaners or disinfectants with connectors may cause corrosion.**
- **Do not pour or spray any liquid directly on the equipment or accessories or permit fluid to seep into live parts inside the equipment.**
- **If you spill liquid on the equipment or accessories, disconnect the power supply, dry the equipment and contact your service personnel.**
- **Improper cleaning/disinfection can damage the examination light. Do not spray the cleaning agent/disinfectant directly into the joints or gaps. Do not use high pressure to clean/disinfect components.**
- **Never use abrasive materials (such as steel wool or silver polish), or strong solvent (such as acetone or acetone-based cleaners) for cleaning.**
- **Do not use polish or steel cleaner to clean or disinfect stainless steel surfaces.**
- **Dilute and use the cleaners or disinfectants according to the manufacturer's instructions.**
- **Disinfectants containing chlorine or hyperoxide are not recommended for aluminum parts with anodized surfaces. Long-term use of these disinfectants may corrode the metal parts, hence compromising safety and effectiveness of the device.**

NOTE

- **Be sure to follow the related national hygiene and disinfection regulations to carry out cleaning and disinfection procedures.**
- **Check the equipment or accessories after cleaning and disinfecting. Stop use if there is any sign of wear or damage.**
- **Clean or disinfect the equipment surface at room temperature. Be sure to follow the disinfectants' instruction if the disinfectants have special temperature requirements for disinfection.**

4.2 Cleaning

4.2.1 Preparation before Cleaning

Switch off the examination light, and wait until it cools down completely.

4.2.2 Cleaning Procedure

1. Use a piece of lint-free clean cloth to wipe off the dust gently and thoroughly.
2. Use a piece of lint-free cloth moistened with cleaner (clean water or soap solution) to wipe the surface.
3. Use a piece of disposable lint-free cloth moistened with water to clean the surface.

4. Use a piece of dry lint-free cloth to wipe the surface dry.

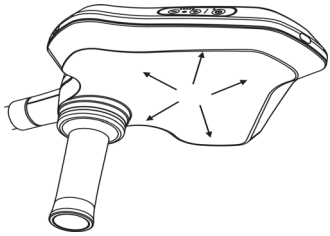

CAUTION

- **When cleaning the lighthead glass, be sure to wipe from the inside to the outside along the radius, as the figure above shows. Do not wipe back and forth or in circles. Otherwise, the glass surface may be damaged.**

NOTE

- **Use proper amount of the cleaning agent to clean the examination light, and remove any excessive agent by the dry cloth.**
- **Be sure to disinfect the equipment after cleaning.**

4.3 Disinfection

4.3.1 Recommended Disinfectants

Disinfect the equipment as required in your hospital's servicing schedule. Cleaning the equipment before disinfection is recommended. Always dilute and use disinfectants according to the manufacturer's instructions. The following table lists approved disinfectants:

Product name	Product type	Manufacturer
Alpet® D2 Surface Sanitizing Wipes	Wipes	BEST SANITIZERS INC™.
CIDEX® OPA	Liquid	Gilag GmbH International Advanced Sterilization products
Clorox Dispatch® Hospital Cleaner Disinfectant Towels with Bleach	Wipes	Clorox professional products company

Product name	Product type	Manufacturer
Clorox Healthcare® Bleach Germicidal Wipes	Wipes	Clorox professional products company
Metrex CaviCide1™	Liquid, spray	METERX® RESEARCH
Metrex CaviWipes™	Wipes	METERX® RESEARCH
PDI Sani-Cloth® AF3 Germicidal Disposable Wipe	Wipes	PDI Inc.
PDI Sani-Cloth® Bleach Germicidal Disposable Wipe	Wipes	PDI Inc.
PDI Sani-Cloth® HB Germicidal Disposable Wipe	Wipes	PDI Inc.
PDI Sani-Cloth® Plus Germicidal Disposable Wipe	Wipes	PDI Inc.
PDI Super Sani-Cloth® Germicidal Disposable Wipe	Wipes	PDI Inc.
Virex® II 256 (1:256)	Liquid	Diversey Inc
JIAN ZHI SU Disinfectant Tablets	Tablet	Beijing ChangJiangMai Medical Science Technology Co. Ltd
JIAN ZHI SU Surface Disinfectant Spray	Liquid, spray	Beijing ChangJiangMai Medical Science Technology Co. Ltd
JIAN ZHI SU Disinfectant, Double-chain Quaternary Ammonium	Liquid	Beijing ChangJiangMai Medical Science Technology Co. Ltd
DIAN'ERKANG Surface Wipes	Wipes	Shanghai Likang Disinfectant Hi-Tech Co., Ltd
DIAN'ERKANG Surface Disinfectant	Liquid	Shanghai Likang Disinfectant Hi-Tech Co., Ltd
DIAN'ERKANG Disinfectant Spray	Liquid, spray	Shanghai Likang Disinfectant Hi-Tech Co., Ltd
Clinell® Universal Wipes	Wipes	GAMA Healthcare Ltd
Clinell ® Sporicidal Wipes	Wipes	GAMA Healthcare Ltd
Surfa 'safe	Liquid, spray	ANIOS LABORATORIES

Product name	Product type	Manufacturer
Aniosurf ND premium, 0.25%	Liquid	ANIOS LABORATORIES
Glutaraldehyde, 2%	Liquid	/
Ethanol, 75%	Liquid	/
Isopropanol, 70%	Liquid	/
Hydrogen peroxide, 3%	Liquid	/
Rely+On™ Virkon® High Level surface Disinfectant	Powder	Antec International Ltd
84 disinfectant (2000mg/L available chlorine)	Liquid	/
Trichloroisocyanuric acid (2000mg/L available chlorine)	Liquid	/
Peroxyacetic acid, 1%	Liquid	/
Domiphen, 2000mg/L	Liquid	/

4.3.2 Disinfection

1. Use a piece of lint-free cloth moistened with disinfectant to wipe the surface.
2. Use a piece of disposable lint-free cloth moistened with water to clean the surface.
3. Use a piece of dry lint-free cloth to wipe the surface dry.

CAUTION

- **When disinfecting the lighthead glass, be sure to wipe from the inside to the outside along the radius. Do not wipe back and forth or in circles. Otherwise, the glass surface may be damaged.**
- **Do not disinfect the equipment by fumigation methods. Otherwise, the equipment may be damaged.**

4.4 Sterilization of Sterilizable Handle

Only cleaned and disinfected handles can be sterilized. Before sterilization, make sure the handle is placed in a sterilization pack that complies with ISO 11607. The whole sterilization procedure shall comply with BS EN ISO 17665, with maximum sterilization temperature not over 134°C and holding time not over 7 minutes.

WARNING

- **The sterilizable handle should be installed only right before use.**

CAUTION

- **Do not apply any load to the handle during sterilization. Otherwise, the handle may deform permanently.**
- **The sterilizable handle may wear out after a certain period of service. Be sure to replace the handle if you see any sign of wear, such as cracking, color fading, etc.**

5 Maintenance

Regular maintenance is essential to ensure that the equipment functions properly. This chapter contains information on equipment maintenance method and frequency.

5.1 Maintenance Safety Information

WARNING

- **To avoid electric shock, stop using the equipment if you find the housing has signs of damage. Contact the service personnel for help in that case.**
- **Failure on the part of the responsible individual hospital or institution using this equipment to implement a recommended maintenance schedule may cause undue equipment failure and possible health hazards.**
- **If you have any questions during the inspection, contact the customer service department authorized by Mindray Animal Medical.**
- **The device maintenance that requires disassembling shall be performed by the professional service personnel authorized by Mindray Animal Medical. Otherwise, device failure or personal safety accidents may occur.**
- **The service personnel must be properly qualified and thoroughly familiar with the operation of the equipment.**
- **Before maintaining or servicing the examination light, be sure to shut off the mains supply first.**

CAUTION

- **The equipment and accessories shall not be tested or maintained while in use with an animal.**
- **Disassembly of certain components can affect operation and safety (e.g. when servicing the electrical power supply, when servicing the swivel arm assembly and the spring arms).**

NOTE

- **This equipment contains no user serviceable parts. Refer servicing to qualified service personnel.**
- **The service life of the examination light is 10 years. At the end of its service life, the device, as well as its accessories, must be disposed of in compliance with local governmental or hospital regulations.**
- **The average service life of the LED is 60,000 hours.**
- **If needed, contact Mindray Animal Medical for circuit diagrams, component part lists, descriptions, calibration instructions, or other information concerning the repair of the equipment.**

5.2 Maintenance Schedule

Follow the maintenance schedule or local regulations to perform maintenance. Be sure to clean and disinfect the equipment before test or maintenance. The following table lists the maintenance and testing schedule:

Test/Maintenance Item (user)	Recommended Frequency	Method
The lightheads and the arms (swivel arms / spring arms / flexible arms) are not damaged.	Every day, before first use.	Visual inspection.
The sterilizable handle is not damaged.		Visual inspection.
The arms do not drift and the lightheads can stay at the desired positions.		See ***5.4 Adjusting Spring Arm*** for details.
The lighthead functions normally.		Turn on the lighthead and operate it as described in ***3 Daily Operations***.
The backup power supply is switched on.		See ***5.3 Maintaining Backup Power Supply (Optional)*** for details.
Load capacity of the spring arm is proper.		See ***5.4 Adjusting Spring Arm*** for details.
The touch keypad functions normally.		See ***3.4.4 Using Touch Keypad*** for details.

Test/Maintenance Item (user)	Recommended Frequency	Method
Backup power supply maintenance.	At least once every month.	See ***5.3 Maintaining Backup Power Supply (Optional)*** for details.

Test/Maintenance Item (must be performed by authorized personnel)	Recommended Frequency	Method
Joint stability check.	On- demand service (yearly check is recommended.)	See ***5.4 Adjusting Spring Arm*** for details.
Load capacity of the spring arm is proper.		See ***5.4 Adjusting Spring Arm*** for details.
The device does not shake.		Rotate the device to check whether it shakes.
The illuminance is stable.		Visual inspection.
All the covers and caps are fixed in place.		Visual inspection.
All the screws are tightened.		Check whether screw heads fit closely to the parts through visual inspection and whether screws are tightened using a tool.

5.3 Maintaining Backup Power Supply (Optional)

5.3.1 Maintenance Period

It is recommended that the backup power supply be tested at least once every month to extend their lives.

5.3.2 Maintenance Method

The switchover to the backup power supply is described as below:

1. Charge the battery module (for VeLED E5M). It takes about 10 hours to fully charge the batteries.
2. Turn on the power switch, and shut off the mains supply.

3. Press “Standby” to turn on the lighthead.
4. Check if the lighthead is turned on and the related backup power indicator occurs.

WARNING

- **Do not open the battery, heat the battery above 60 °C, incinerate battery, or short battery terminals. They may ignite, explode, leak or heat up, causing personal injury.**

NOTE

- **Do not use the damaged battery. If the battery is dead, contact the customer service department authorized by Mindray Animal Medical or your local distributor.**
- **Inspect and replace the battery at regular service intervals.**

5.4 Adjusting Spring Arm

CAUTION

- **Before maintaining or servicing the examination light, be sure to shut off the mains supply first.**

If the examination light cannot be positioned at the desired height, you can adjust the load capacity of the spring arm.

1. Insert a 4mm Allen key into the adjusting hole as far as possible.
2. Adjust the hexagon socket screw:

- If the light tends to move upward, turn the Allen key in the “-” direction.
- If the light tends to move downward, turn the Allen key in the “+” direction.

◆ VeLED E5 / VeLED E5W

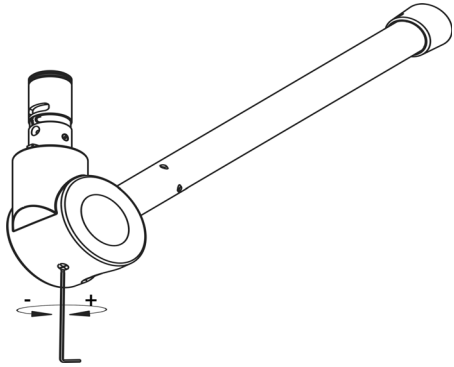

◆ VeLED E5M

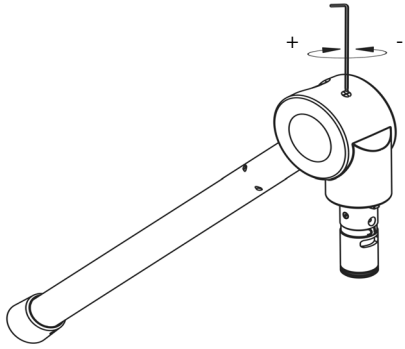

5.5 Disposal

Dispose of the equipment when its service life is reached.

WARNING

- **At the end of its service life, the equipment, as well as its accessories, must be disposed of in compliance with the local regulations. If you have any questions concerning disposal of the equipment, please contact Mindray Animal Medical.**
- **For disposal of parts and accessories, unless otherwise specified, follow local regulations regarding disposal of hospital waste.**
- **Dispose of the package material as per the applicable waste control regulations. Keep it out of children's reach.**

6 Troubleshooting

6.1 Common Error

WARNING

- **The chapter is meant to help you solve common errors only. In case you encounter problems not included in this chapter or following the introduced methods cannot solve the problem, contact the customer service department authorized by Mindray Animal Medical or your local distributor for help. Unauthorized device servicing is not allowed.**
- **Device servicing is to be performed by personnel authorized by Mindray Animal Medical only. Unauthorized device servicing may cause personal injury and/or property damage.**
- **Be sure to disconnect the equipment from AC power when device servicing.**
- **Device servicing and installation should be strictly based on technical data supplied by Mindray Animal Medical. If you are in need of more technical data, contact the customer service department authorized by Mindray Animal Medical or your local distributor.**

Error	Cause	Solution
The lighthead cannot be turned on.	The fuse is broken.	Contact the customer service department authorized by Mindray Animal Medical.
	The power supply is cut off.	Check the power supply.
	Some electronic parts are broken.	Contact the customer service department authorized by Mindray Animal Medical.
The light flickers.	Improper installation.	Contact the customer service department authorized by Mindray Animal Medical.

Error	Cause	Solution
A group of LEDs or one LED does not light up.	The LED is defective.	Contact the customer service department authorized by Mindray Animal Medical.
	The LED wires are defective or disconnected.	
	Some electronic parts are broken.	
The illuminance cannot be adjusted.	Some electronic parts are broken.	Contact the customer service department authorized by Mindray Animal Medical.
The illuminance is too low.	The illuminance setting is too low.	Increase the illuminance. See ***3.4.4.2 Adjusting the Illuminance*** for details.
The battery cannot be charged.	The battery is not connected to mains power.	Connect the mains supply.
	The fuse is broken.	Contact the customer service department authorized by Mindray Animal Medical.
The battery does not work, or does not run as long as the claimed time.	The battery is not fully charged.	Charge the battery.
	The battery is broken.	Contact the customer service department authorized by Mindray Animal Medical.
The glass surface has scratch or cracking.	Incorrect cleaning/ disinfection agents are used or the glass is cleaned before it has completely cooled down.	See ***4.2 Cleaning*** and ***4.3 Disinfection*** for detailed cleaning/disinfection methods.
Service life of the sterilizable handle is shorter.	Incorrect sterilization method is adopted.	Check the sterilization. See ***4.4 Sterilization of Sterilizable Handle*** for details.
The sterilizable handle is worn or cracked.	Its service life has expired.	Replace the sterilizable handle. See ***3.4.1 Installing/Removing Sterilizable Handle*** for details.

Error	Cause	Solution
The sterilizable handle does not engage into the central handle correctly.	Sterilization parameters (temperature, time) exceeded.	See ***4.4 Sterilization of Sterilizable Handle*** for how to sterilize the handle. Make sure the handle clicks into place.
	Its service life has expired.	Replace the sterilizable handle. See ***3.4.1 Installing/Removing Sterilizable Handle*** for details.

This page intentionally left blank.

A Product Specifications

A.1 Safety SpecificationsProduct Classification

According to the protection against electrical shock	Class I, internal electrical power source (optional). No applied part.
According to the protection against harmful ingress of water or particulate matter	IPX0
According to the method(s) of sterilization	By methods validated and described by the manufacturer.
According to the suitability for use in an oxygen rich environment	Not suitable for use in the presence of an oxygen rich environment.
According to the mode of operation	Continuous operation.

WARNING

- **To avoid the risk of electric shock, this equipment must only be connected to a supply mains with protective earth.Where the integrity of the external protective conductor in the installation or its arrangement is in doubt, the examination light shall be operated from its internal electrical power source.**

A.1.1 Environmental Specifications

Item	Temperature (°C)	Humidity (non-condensing)	Atmospheric pressure (kPa)
Operating condition	5-40	15%-95%	70-106

Item	Temperature (°C)	Humidity (non-condensing)	Atmospheric pressure (kPa)
Storage condition	–40-60	10%-95%	50-106

CAUTION

- **During transportation, ensure that the examination light is well protected from rain, snow or mechanical collision.**
- **The examination light should be stored in a room that is dry, draughty and without caustic gas.**

A.2 Power Supply Specifications

A.2.1 Power Supply

AC power	100-240V ～ , ±10%; 50/60Hz, ±1Hz

A.2.2 Input Power

Model	Configuration	Input power
VeLED E5	Single lighthead	100-240V 0.6-0.25A
VeLED E5W	Single lighthead	100-240V 0.6-0.25A
VeLED E3W	Single lighthead	100-240V 0.6-0.25A

Model	Input power	Input power (with battery module)
VeLED E5M	100-240V 0.6-0.25A	100-240V 2.0-0.85A
VeLED E3M	100-240V 0.6-0.25A	/

A.2.3 Lighthead Power

Model	Power
VeLED E5/E5W/E5M	35W
VeLED E3W/E3M	35W

A.2.4 Power Consumption of All Light Sources

Model	Power
VeLED E5/E5W/E5M	25W
VeLED E3W/E3M	25W

A.2.5 Fuse

Item	Common power module	Battery module
Fuse board	250V T 1.6AH	250V T 5AH
Power board	250V T 2AL	250V T 5AH

A.2.6 Battery Module

Power	100-240V,1.4-0.6A
Voltage	24V DC
Runtime	Environment temperature: 25°C; Humidity: 10%~95% VeLED E5M / VeLED E3M: 15h (at level-3 illuminance) 10h (at level-5 illuminance)
Charge time	About 10h

WARNING

- **Replacement of backup batteries by inadequately trained personnel could result in a hazard (such as excessive temperatures, fire or explosion). Make sure the batteries are replaced by personnel authorized by Mindray Animal Medical only.**

CAUTION

- **The examination light is not compatible with the AC 24V power supply. Do not connect them together. Otherwise, the light may be damaged.**
- **It is recommended that the backup batteries be tested at least once every month to extend their lives.**

NOTE

- **Note that the backup battery module provides temporary illumination before the emergency power supply starts.**
- **The output voltage of the battery is 24 V, which is composed of a single 24 V battery or two 12 V batteries depending on the sales region.**

A.3 Optical Performance

Model	VeLED E5/ E5W	VeLED E5M	VeLED E3W	VeLED E3M
Central illuminance (Ec,Ref)[a]	About 70,000 lx	About 70,000 lx	About 60,000 lx	About 60,000 lx
Color temperature[a]	About 4500K	About 4500K	About 4500K	About 4500K
General color rendering index (Ra)[a]	About 99	About 99	About 99	About 99
Specific color rendering index (R9)[a]	About 97	About 97	About 97	About 97
Irradiance (E_{total})[b]	About 370 W/ m^2	About 370 W/ m^2	About 370 W/ m^2	About 370 W/ m^2
E_{total}/Ec,MI	About 3.5 mW/(m^2·lx)	About 3.5 mW/(m^2·lx)	About 3.5 mW/(m^2·lx)	About 3.5 mW/(m^2·lx)
Light field diameter (d10)[a]	About 170mm	About 170mm	About 170mm	About 170mm
d50/ d10[a]	About 50%	About 50%	About 50%	About 50%
Depth of illumination (20%)[a]	About 1500mm	About 1500mm	About 1500mm	About 1500mm
Depth of illumination (60%)[a]	About 1100mm	About 1100mm	About 1100mm	About 1100mm

a: The value test is conducted at a distance of 1m, with the maximum illuminance level and the minimum light field.

b: The value test is conducted at a distance of about 0.7m, with the maximum illuminance level and the minimum light field.

NOTE

- **The optical performance is subject to fluctuations. Due to manufacturing reasons, the real value may slightly differ from the data mentioned above.**
- **The maximum illuminance (Ec) (1m) is measured under the color temperature of about 4500K.**
- **Under the color temperature of about 4500K, the general color rendering index (Ra) is about 99 and the specific color rendering index (R9) is about 97.**
- **Note that the original IEC 60601-2-41 defined Depth of Illumination as the working range around 1,000mm below the emitting surface of the examination light, in which the illuminance reaches at least 20% of the central illuminance. However, the latest version has changed the standard to 60%.**

A.4 Degree of Rotation/Reach

■ VeLED E5

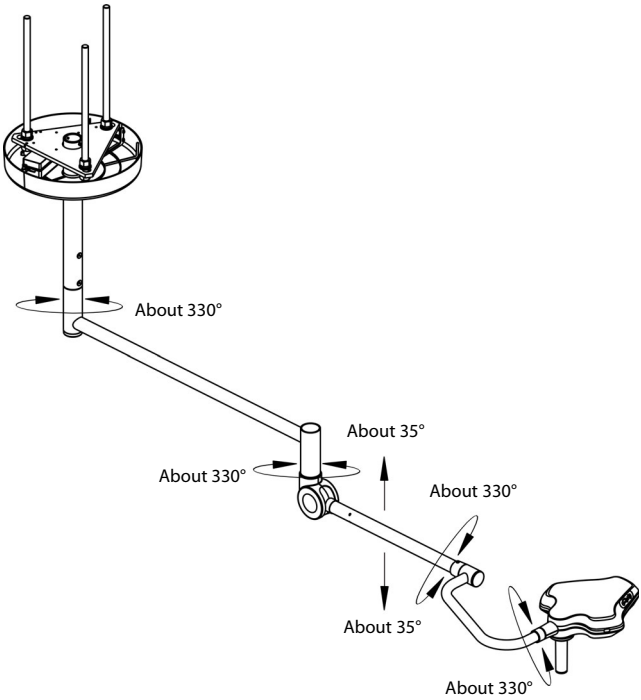

■ VeLED E5W

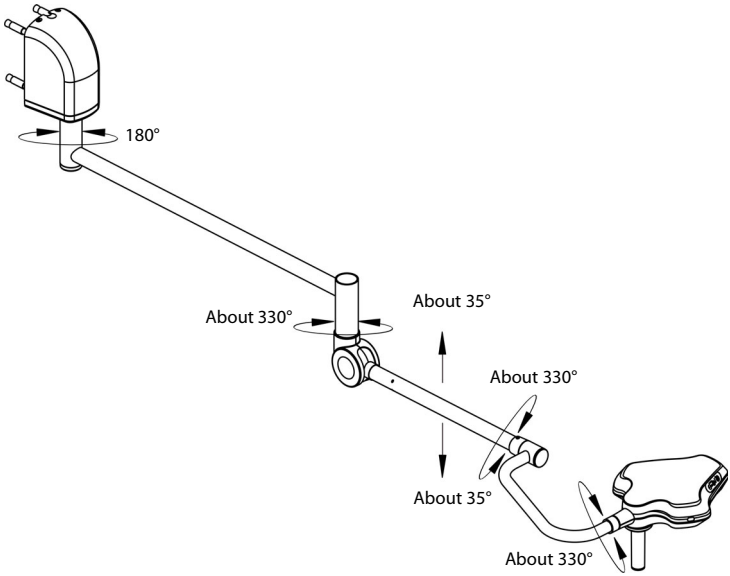

■ VeLED E3W

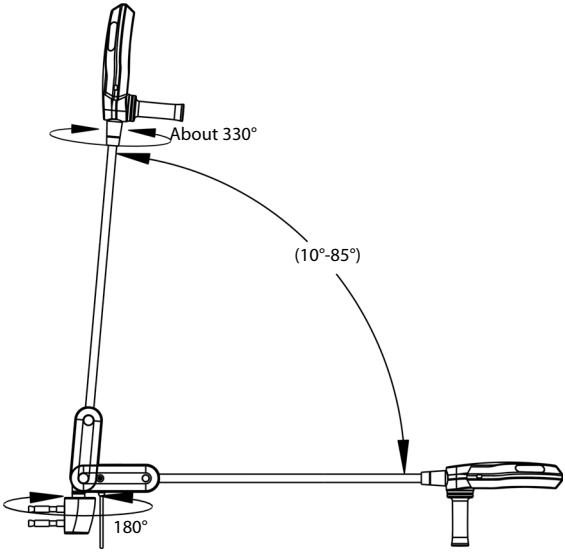

■ VeLED E5M

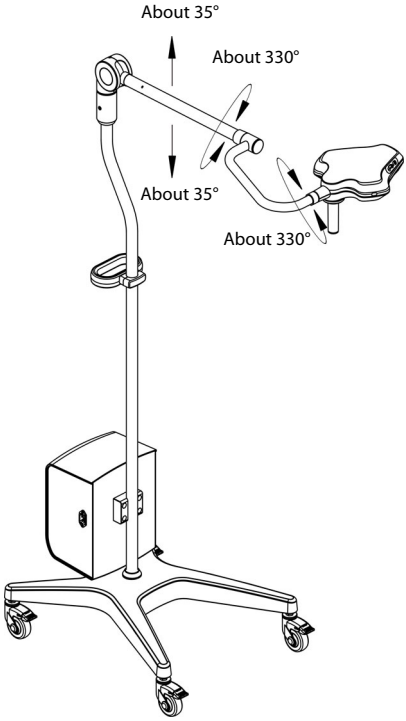

■ VeLED E3M

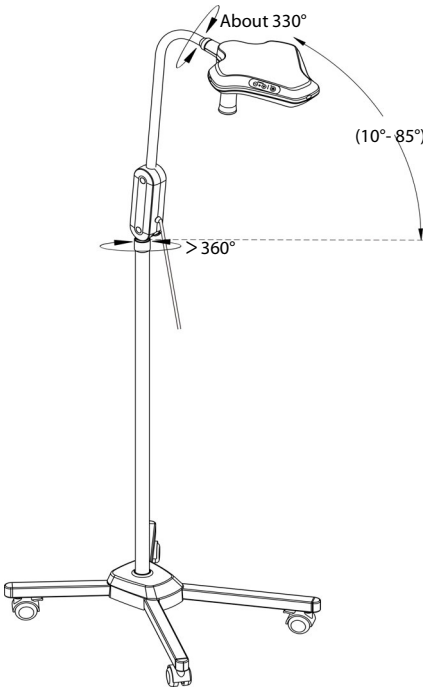

B Accessories and Parts List

NO.	Description
1.	Ceiling fixture
2.	Separate flange tube
3.	Sterilizable handle assembly
4.	Sterilizable handle
5.	Extension power cable

This page intentionally left blank.

D EMC

The equipment complies with the EMC standard IEC 60601-1-2.
Intended environments: this equipment is intended for use in professional healthcare facility EMC environment only.

WARNING

- **The use of unapproved accessories may diminish equipment performance.**
- **The equipment needs special precautions regarding EMC and needs to be installed and put into service according to the EMC information provided below.**
- **Use of this equipment adjacent to or stacked with other equipment should be avoided because it could result in improper operation. If such use is necessary, this equipment and the other equipment should be observed to verify that they are operating normally.**
- **Use of accessories, transducers and cables other than those specified or provided by the manufacturer of this equipment could result in increased electromagnetic emissions or decreased electromagnetic immunity of this equipment and result in improper operation.**
- **Portable RF communications equipment (including peripherals such as antenna cables and external antennas) should be used no closer than 30 cm (12 inches) to any part of the equipment, including cables specified by the manufacturer. Otherwise, degradation of the performance of this device could result.**
- **Other devices may interfere with this equipment even though they meet the requirements of CISPR.**
- **Use of portable or mobile communications devices can degrade the performance of the equipment.**

Guidance and Declaration-Electromagnetic Emissions		
The equipment is intended for use in the electromagnetic environment specified below. The customer or the user of the equipment should assure that it is used in such an environment.		
Emissions test	**Compliance**	**Electromagnetic environment-guidance**
Conducted and radiated RF EMISSIONS CISPR 11	Group 1	The equipment uses RF energy only for its internal function. Therefore, its RF emissions are very low and are not likely to cause any interference in nearby electronic equipment.
Conducted and radiated RF EMISSIONS CISPR 11	Class A	The equipment is suitable for use in all establishments other than domestic and those directly connected to the public low-voltage power supply network that supplies buildings used for domestic purposes.
Harmonic current EMISSIONS IEC 61000-3-2	Not applicable	
Voltage fluctuations and flicker EMISSIONS IEC 61000-3-3	Not applicable	

If the equipment is operated within the electromagnetic environment listed in Table Guidance and Declaration —Electromagnetic Immunity, the equipment will remain safe and provide the following essential performance: provide steady illuminance and irradiance as the essential performance.

Guidance and Declaration-Electromagnetic Immunity			
The equipment is intended for use in the electromagnetic environment specified below. The customer or the user of the equipment should assure that it is used in such an environment.			
Immunity test	**IEC 60601 test level**	**Compliance level**	**Electromagnetic environment - guidance**
Electrostatic discharge (ESD) IEC 61000-4-2	±8 kV contact ±2 kV, ±4 kV, ±8 kV, ±15 kV air	±8 kV contact ±2 kV, ±4 kV, ±8 kV, ±15 kV air	Floors should be wood, concrete or ceramic tile. If floors are covered with synthetic material, the relative humidity should be at least 30%.
Electrical fast transient/ burst IEC 61000-4-4	±2 kV for power supply lines ±1 kV for input/ output lines (length greater than 3 m)	±2 kV for power supply lines ±1 kV for input/ output lines (length greater than 3 m)	Mains power quality should be that of a typical commercial or hospital environment.
Surge IEC 61000-4-5	±0,5 kV, ±1 kV line(s) to line(s) ±0,5 kV, ±1 kV, ±2 kV line(s) to earth	±0,5 kV, ±1 kV line(s) to line(s) ±0,5 kV, ±1 kV, ±2 kV line(s) to earth	
Voltage dips, short interruptions and voltage variation on power supply input voltage IEC 61000-4-11	0 % U_T for 0,5 cycle At 0°, 45°, 90°, 135°, 180°, 225°, 270° and 315° 0 % U_T for 1 cycle and 70 % U_T for 25/30 cycles Cycle at 0° 0 % U_T for 250/ 300 cycle	0 % U_T for 0,5 cycle At 0°, 45°, 90°, 135°, 180°, 225°, 270° and 315° 0 % U_T for 1 cycle and 70 % U_T for 25/30 cycles Cycle at 0° 0 % U_T for 250/ 300 cycle	Mains power quality should be that of a typical commercial or hospital environment. If the user of our product requires continued operation during power mains interruptions, it is recommended that our product be powered from an uninterruptible power supply or a battery.

RATED power frequency magnetic fields IEC 61000-4-8	30 A/m 50 Hz / 60 Hz	30 A/m 50 Hz / 60 Hz	Power frequency magnetic fields should be at levels characteristic of a typical location in a typical commercial or hospital environment.
Note: U_T is the A.C. mains voltage prior to application of the test level.			

Guidance and Declaration-Electromagnetic Immunity			
The equipment is intended for use in the specified electromagnetic environment. The customer or the user of the device should assure that it is used in such an environment as described below.			
Immunity test	**IEC60601 test level**	**Compliance level**	**Electromagnetic environment-guidance**
Conducted disturbances induced by RF fields IEC61000-4-6	3 Vrms 150 kHz to 80 MHz 6 Vrms in ISM bands [a] between 0,15 MHz and 80 MHz	3 Vrms 150 kHz to 80 MHz 6 Vrms in ISM bands [a] between 0,15 MHz and 80 MHz	Portable and mobile RF communications equipment should be used no closer to any part of the device, including cables, than the recommended separation distance calculated from the equation applicable to the frequency of the transmitter. Recommended separation distances: $d = 1.2\sqrt{P}$ $d = 2\sqrt{P}$

Radiated RF EM fields IEC61000-4-3	3 V/m 80 MHz to 2.7 GHz	3 V/m 80 MHz to 2.7 GHz	$d = 1.2\sqrt{P}$ 80 MHz to 800 MHz $d = 2.3\sqrt{P}$ 800 MHz to 2.7 GHz Where P is the maximum output power rating of the transmitter in watts (W) according to the transmitter manufacturer and d is the recommended separation distance in meters (m). Field strengths from fixed RF transmitters, as determined by an electromagnetic site survey [b], should be less than the compliance level in each frequency range [c]. Interference may occur in the vicinity of equipment marked with the following symbol:

Note 1: At 80 MHz to 800 MHz, the higher frequency range applies.
Note 2: These guidelines may not apply in all situations. Electromagnetic propagation is affected by absorption and reflection from structures, objects and people.

[a]: The ISM (industrial, scientific, and medical) bands between 150 kHz and 80 MHz are 6,765 MHz to 6,795 MHz; 13,553 MHz to 13,567 MHz; 26,957 MHz to 27,283 MHz; and 40,66 MHz to 40,70 MHz. The amateur radio bands between 0,15 MHz and 80 MHz are 1,8 MHz to 2,0 MHz, 3,5 MHz to 4,0 MHz, 5,3 MHz to 5,4 MHz, 7 MHz to 7,3 MHz, 10,1 MHz to 10,15 MHz, 14 MHz to 14,2 MHz, 18,07 MHz to 18,17 MHz, 21,0 MHz to 21,4 MHz, 24,89 MHz to 24,99 MHz, 28,0 MHz to 29,7 MHz and 50,0 MHz to 54,0 MHz.

[b]: Field strengths from fixed transmitters, such as base stations for radio (cellular/ cordless) telephones and land mobile radios, amateur radio, AM and FM radio broadcast and TV broadcast cannot be predicted theoretically with accuracy. To assess the electromagnetic environment due to fixed RF transmitters, an electromagnetic site survey should be considered. If the measured field strength in the location in which the device is used exceeds the applicable RF compliance level above, the device should be observed to verify normal operation. If abnormal performance is observed, additional measures may be necessary, such as re-orienting or relocating the device.

[c]: Over the frequency ranges 150 kHz to 80 MHz, field strengths should be less than 3V/ m.

GUIDANCE AND DECLARATION—ELECTROMAGNETIC IMMUNITY			
The equipment is intended for use in the electromagnetic environment specified below. The customer or the user of the equipment should assure that it is used in such an environment.			
Immunity test	**IEC60601 test level**	**Compliance level**	**Electromagnetic environment-guidance**
Proximity magnetic fields IEC 61000-4-39	65 A/m 134,2 kHz Pulse modulation 2,1 kHz	65 A/m 134,2 kHz Pulse modulation 2,1 kHz	/
	7,5 A/m 13,56 MHz Pulse modulation 50 kHz	7,5 A/m 13,56 MHz Pulse modulation 50 kHz	

Test specifications and minimum distances

Recommended separation distances between portable and mobile RF communications equipment and this equipment						
The equipment is intended for use in an electromagnetic environment in which radiated RF disturbances are controlled. The customer or the user of the equipment can help prevent electromagnetic interference by maintaining a minimum distance between portable and mobile RF communications equipment (transmitters) and the equipment as recommended below, according to the maximum output power of the communications equipment. Portable and mobile radio communications equipment (e.g. two-way radio, cellular/ cordless telephones and similar equipment) should be used no closer to any part of this equipment, including cables, than determined according to the following method:						
Test frequency (MHz)	**Band (MHz)**	**Service**	**Modulation**	**Maximum power (W)**	**Distance (m)**	**Immunity test level (V/m)**
385	380 - 390	TETRA 400	Pulse modulation 18Hz	1,8	0,3	27

Recommended separation distances between portable and mobile RF communications equipment and this equipment						
450	430 -470	GMRS 460 FRS 460	FM ±5 kHz deviation 1 kHz sine	2	0,3	28
710	704 - 787	LTE Band 13,17	Pulse modulation 217 Hz	0,2	0,3	9
745						
780						
810	800 - 960	GSM 800/ 900, tetra 800, iDEN 820, CDMA 850, LTE Band 5	Pulse modulation 18 Hz	2	0,3	28
870						
930						
1720	1700 - 1990	GSM 1800, CDMA 1900, GSM 1900, DECT, LTE Band 1, 3, 4, 25; UMTS	Pulse modulation 217 Hz	2	0,3	28
1845						
1970						
2450	2400 - 2570	Bluetooth, WLAN, 802.11 b/ g/n, RFID 2450, LTE Band 7	Pulse modulation 217 Hz	2	0,3	28

Recommended separation distances between portable and mobile RF communications equipment and this equipment						
5240	5100 - 5800	WLAN, 802.11 a/ n	Pulse modulati on 217 Hz	0,2	0,3	9
5500						
5785						

RECOMMENDED SEPARATION DISTANCES BETWEEN PORTABLE AND MOBILE RF COMMUNICATION DEVICE AND THE SYSTEM				
The equipment is intended for use in an electromagnetic environment in which radiated RF disturbance are controlled. The customer or the user of the device can help prevent electromagnetic interference by maintaining a minimum distance between portable and mobile RF communications equipment (transmitters) and the equipment as recommended below, according to the maximum output power of the communication equipment.				
Rated Maximum Output power of Transmitter Watts (W)	**Separation distance according to frequency of transmitter (m)**			
	150kHz-80MHz Out ISM bands $d = 1.2\sqrt{P}$	150kHz-80MHz In ISM bands $d = 2\sqrt{P}$	80MHz-800MHz $d = 1.2\sqrt{P}$	800MHz-2.7GHz $d = 2.3\sqrt{P}$
0.01	0.12	0.20	0.12	0.23
0.10	0.38	0.64	0.38	0.73
1.00	1.20	2.00	1.20	2.30
10.00	3.80	6.40	3.80	7.30
100.00	12.00	20.00	12.00	23.00

For transmitters at a maximum output power not listed above, the recommended separation distance d in meters (m) can be determined using the equation applicable to the frequency of the transmitter, where P is the maximum output power rating of the transmitter in watts (W) according to the transmitter manufacturer.

Note 1: At 80 MHz to 800 MHz, the higher frequency range applies.
Note 2: These guidelines may not apply in all situations. Electromagnetic propagation is affected by absorption and reflection from structures, objects and people.

Cable:

No.	Description	Length (m)	Shielded or not
1	AC power cord	⩽5	Not shielded

This page intentionally left blank.

This page intentionally left blank.

P/N: 046-031063-00(1.0)