VetiPad C1 Plus

Veterinary Digital Detector and Imaging System

Operator's Manual

©2025 Shenzhen Mindray Animal Medical Technology Co., Ltd. All Rights Reserved.

For this Operator's Manual, the issue date is 2025-03.

IMPORTANT!

The system is veterinary use only.

Intellectual Property Statement

Shenzhen Mindray Animal Medical Technology Co., Ltd. (hereinafter called Mindray Animal Medical) owns the intellectual property rights to this product and this manual. This manual may refer to information protected by copyright or patents and does not convey any license under the patent rights or copyright of Mindray Animal Medical, or of others.

Mindray Animal Medical intends to maintain the contents of this manual as confidential information. Disclosure of the information in this manual in any manner whatsoever without the written permission of Mindray Animal Medical is strictly forbidden.

Release, amendment, reproduction, distribution, rental, adaptation, translation or any other derivative work of this manual in any manner whatsoever without the written permission of Mindray Animal Medical is strictly forbidden.

mindray, is the trademark of SHENZHEN MINDRAY BIO-MEDICAL ELECTRONICS CO., LTD. in China and other countries. All other trademarks that appear in this manual are used only for informational or editorial purposes. They are the property of their respective owners.

Responsibility on the Manufacturer Party

Contents of this manual are subject to change without prior notice.

All information contained in this manual is believed to be correct. Mindray Animal Medical shall not be liable for errors contained herein or for incidental or consequential damages in connection with the furnishing, performance, or use of this manual.

Mindray Animal Medical is responsible for the effects on safety, reliability and performance of this product, only if:

- all installation operations, expansions, changes, modifications and repairs of this product are conducted by Mindray Animal Medical authorized personnel;
- the electrical installation of the relevant room complies with the applicable national and local requirements; and
- the product is used in accordance with the instructions for use.

NOTE:

This equipment must be operated by skilled/trained clinical professionals.

⚠ WARNING

It is important for the hospital or organization that employs this equipment to carry out a reasonable service/maintenance plan. Neglect of this may result in machine breakdown or personal injury.

Warranty

THIS WARRANTY IS EXCLUSIVE AND IS IN LIEU OF ALL OTHER WARRANTIES, EXPRESSED OR IMPLIED, INCLUDING WARRANTIES OF MERCHANTABILITY OR FITNESS FOR ANY PARTICULAR PURPOSE.

Exemptions

Mindray Animal Medical's obligation or liability under this warranty does not include any transportation or other charges or liability for direct, indirect or consequential damages or delay resulting from the improper use or application of the product or the use of parts or accessories not approved by Mindray Animal Medical or repairs by people other than Mindray Animal Medical authorized personnel.

This warranty shall not extend to:

- Malfunction or damage caused by improper use or man-made failure.
- Malfunction or damage caused by unstable or out-of-range power input.
- Malfunction or damage caused by force majeure such as fire and earthquake.
- Malfunction or damage caused by improper operation or repair by unqualified or unauthorized service people.
- Malfunction of the instrument or part whose serial number is not legible enough.
- Others not caused by instrument or part itself.

Important Information

- It is the customer's responsibility to maintain and manage the system after delivery.
- The warranty does not cover the following items, even during the warranty period:
  - Damage or loss due to misuse or abuse.
  - Damage or loss caused by Acts of God such as fires, earthquakes, floods, lightning, etc.
  - Damage or loss caused by failure to meet the specified conditions for this system, such as inadequate power supply, improper installation or environmental conditions.
  - Damage or loss due to use of the system outside the region where the system was originally sold.
  - Damage or loss involving the system purchased from a source other than Mindray Animal Medical or its authorized agents.

- This system shall not be used by persons other than fully qualified and certified medical personnel.
- DO NOT make changes or modifications to the software or hardware of this system.
- In no event shall Mindray Animal Medical be liable for problems, damage, or loss caused by relocation, modification, or repair performed by personnel other than those designated by Mindray Animal Medical.
- The purpose of this system is to provide physicians with data for clinical diagnosis. The physician is responsible for the results of diagnostic procedures. Mindray Animal Medical shall not be liable for the results of diagnostic procedures.
- Important data must be backed up on external memory media.
- Mindray Animal Medical shall not be liable for loss of data stored in the memory of this system caused by operator error or accidents.
- This manual contains warnings regarding foreseeable potential dangers, but you shall also be continuously alert to dangers other than those indicated. Mindray Animal Medical shall not be liable for damage or loss resulting from negligence or ignorance of the precautions and operating instructions described in this operator's manual.
- If a new manager takes over this system, be sure to hand over this operator's manual to the new manager.

About This Manual

This operator's manual describes the operating procedures for this system. To ensure safe and correct operation, carefully read and understand the manual before operating the system.

NOTE:

- If you find that the contents of the multi-language manuals are NOT consistent with the system or the English manuals, refer ONLY to the corresponding English manuals.
- The accompanying manuals may vary depending on the specific system you purchased. Please refer to the packing list.

Meaning of Signal Words

In this manual, the signal words ⚠**DANGER**, ⚠**WARNING**, ⚠**CAUTION**, ***NOTE*** and ***TIP*** are used regarding safety and other important instructions. The signal words and their meanings are defined as follows. Please understand their meanings clearly before reading this manual.

Signal word	Meaning
⚠ **DANGER**	Indicates an imminently hazardous situation that, if not avoided, will result in death or serious injury.
⚠ **WARNING**	Indicates a potentially hazardous situation that, if not avoided, could result in death or serious injury.
⚠ **CAUTION**	Indicates a potentially hazardous situation that, if not avoided, may result in minor or moderate injury.
NOTE	Indicates a potentially hazardous situation that, if not avoided, may result in property damage.

Signal word	Meaning
TIP	Important information that helps you to use the system more effectively.

Software Interfaces in this Manual

Depending on the software version, preset settings and optional configuration, the actual interfaces may be different from those in this manual.

Conventions

In this manual, the following conventions are used to describe the buttons on the control panel, items in the menus, buttons in the dialog boxes and some basic operations:

- <Buttons>: angular brackets indicate buttons, knobs and other controls on the control panel.
- [Items in menu or buttons in dialog box]: square brackets indicate items in menus or buttons in dialog boxes.
- Select [Items or Buttons]: click the item or button in dialog boxes by using the left mouse button.
- [Items in menu] > [Items in submenu]: select a submenu item following the path.

Operator’s Manuals

The content of the operator manual, such as screens, menus or descriptions, may be different from what you see in your system. The content varies depending on the software version, options and configuration of the system.

Contents

1 Important Information ..... 1 - 1
1.1 Safety Precautions ..... 1 - 1
1.2 Usage and Maintenance of the FPD ..... 1 - 3
1.2.1 Precautions on detector usage ..... 1 - 3
1.2.2 Precautions on detector storage ..... 1 - 5
1.2.3 Precautions on detector cleaning and maintenance ..... 1 - 5
1.3 Parts that can be used within animal environment ..... 1 - 6
2 System Overview ..... 2 - 1
2.1 Intended Use ..... 2 - 1
2.2 Safety Classification ..... 2 - 1
2.3 Power Supply Box ..... 2 - 2
2.4 Flat Panel Detector (FPD) ..... 2 - 3
2.5 Operator Console Control Software Overview ..... 2 - 4
2.5.1 System Status Icons ..... 2 - 5
2.5.2 Registration Management Screen ..... 2 - 6
2.5.3 Exposure Exam Screen ..... 2 - 7
2.5.4 History Exam Screen ..... 2 - 8
2.5.5 Image Print Management Screen ..... 2 - 9
2.5.6 Report Management Screen ..... 2 - 10
2.6 Adjust the Exposure Parameters ..... 2 - 10
2.7 Symbols and Warning Labels ..... 2 - 11
3 System Preparation ..... 3 - 1
3.1 Connecting the System ..... 3 - 1
3.2 Powering On and Off the System ..... 3 - 2
3.2.1 Check before Powering On ..... 3 - 2
3.2.2 Powering On ..... 3 - 2
3.2.3 Powering Off ..... 3 - 2
3.3 Login ..... 3 - 2
4 Setup ..... 4 - 1
4.1 System Setup ..... 4 - 1
4.1.1 Setting the System Language ..... 4 - 1
4.1.2 Equipment Configurations ..... 4 - 1
4.1.3 User Management ..... 4 - 2
4.1.4 Option Configuration and Authorization ..... 4 - 3
4.1.5 Detector Calibration ..... 4 - 3
4.1.6 Exam Information Display Configurations ..... 4 - 5

4.1.7 Register Management Settings ..... 4 - 5
4.1.8 Exam Configurations ..... 4 - 6
4.1.9 DICOM Image Printing Configuration ..... 4 - 7
4.1.10 Help Manual ..... 4 - 8
4.1.11 Log and Configuration Maintenance ..... 4 - 8
4.1.12 Statistic ..... 4 - 8
4.1.13 Parameter Manager ..... 4 - 9
4.1.14 Prepay Installment ..... 4 - 10
4.1.15 Report Configurations ..... 4 - 10
4.1.16 Lock Equipment ..... 4 - 12
4.2 System Date and Time Setup ..... 4 - 12
4.3 Network Setup ..... 4 - 12
4.4 Disk Space Configuration ..... 4 - 12
4.5 DICOM Setup ..... 4 - 13
4.5.1 DICOM Local Preset ..... 4 - 13
4.5.2 DICOM Worklist Preset ..... 4 - 13
4.5.3 DICOM Print Preset ..... 4 - 14
4.5.4 DICOM Storage Preset ..... 4 - 16
4.5.5 MPPS Preset ..... 4 - 17
4.5.6 DICOM SC Preset ..... 4 - 18
4.5.7 DICOM Q/R Preset ..... 4 - 18
4.6 Screen Brightness Management ..... 4 - 18
4.7 System Information ..... 4 - 18
5 Starting an Exam ..... 5 - 1
5.1 Registration Management ..... 5 - 1
5.1.1 Local registration ..... 5 - 1
5.1.2 Registration Information Management ..... 5 - 2
5.1.3 Animal Information Query ..... 5 - 3
5.2 Exposure ..... 5 - 3
6 Image Browsing and Processing ..... 6 - 1
6.1 Image Display ..... 6 - 1
6.2 Thumbnail ..... 6 - 1
6.3 Image Operation ..... 6 - 1
6.4 Annotation ..... 6 - 4
6.4.1 Position Identification ..... 6 - 4
6.4.2 Text Annotation ..... 6 - 5
6.4.3 Arrow Annotation ..... 6 - 6
6.5 Measurements ..... 6 - 6
6.5.1 Basic Operations and Buttons ..... 6 - 7
6.5.2 Measurement Menu ..... 6 - 7
6.5.3 Measurement Caliper ..... 6 - 9
6.5.4 Results Window ..... 6 - 9
6.5.5 Routine Measurements ..... 6 - 9
6.5.6 Application Measurements ..... 6 - 11
6.6 Image Postprocessing ..... 6 - 20
6.7 Image Stitching ..... 6 - 24

6.7.1 Starting Stitching Management ..... 6 - 25
6.8 Image Confirmation ..... 6 - 27
7 Animal Data Management ..... 7 - 1
7.1 Searching an Animal ..... 7 - 1
7.2 Animal Data View and Management ..... 7 - 2
7.3 Image Compare ..... 7 - 2
7.4 Sending Animal data ..... 7 - 3
7.5 u-Link (applicable for CE region only) ..... 7 - 4
7.6 Recycle Bin ..... 7 - 4
7.7 Image Print ..... 7 - 4
7.7.1 Thumbnail Area Operations ..... 7 - 4
7.7.2 Image Adjustment ..... 7 - 5
7.7.3 Print Typesetting ..... 7 - 5
7.7.4 Setting the Print Parameter ..... 7 - 6
7.7.5 Print ..... 7 - 7
7.8 Animal Task Management ..... 7 - 7
7.9 DICOM Task Management ..... 7 - 7
8 Report Management ..... 8 - 1
8.1 Select a Report ..... 8 - 1
8.2 Edit a Report ..... 8 - 1
8.2.1 Adding Images ..... 8 - 1
8.2.2 Adding Diagnosis Description ..... 8 - 2
8.2.3 Setting Positive/Negative ..... 8 - 2
8.3 Save a Report ..... 8 - 2
8.4 Preview a Report ..... 8 - 3
8.5 Print a Report ..... 8 - 3
8.6 Deleting a Report ..... 8 - 3
8.7 Knowledge Base Management ..... 8 - 3
8.7.1 Adding a Knowledge Base ..... 8 - 4
8.7.2 Modifying a Template ..... 8 - 4
8.7.3 Saving Report Contents to a Template ..... 8 - 4
8.7.4 Adjusting Contents ..... 8 - 5
9 System Maintenance ..... 9 - 1
9.1 Operator’s Tasks ..... 9 - 1
9.2 Service Tasks ..... 9 - 2
10 System Specifications ..... 10 - 1
10.1 Operating Environment ..... 10 - 1
10.2 Technical Specifications ..... 10 - 1
10.2.1 Environmental Conditions ..... 10 - 1
10.2.2 Power supply ..... 10 - 2
10.2.3 Flat panel detector (AME4343R1) ..... 10 - 2
11 Guidance and Manufacturer’s Declaration ..... 11 - 1
11.1 EMC ..... 11 - 1
11.2 Cable Information ..... 11 - 7

1 Important Information

1.1 Safety Precautions

Please observe the following precautions to ensure animal and operator's safety when using this system.

⚠ DANGER

Do not operate this system in an atmosphere containing flammable gases or liquids such as anesthetic gases, hydrogen, and ethanol, because there is danger of explosion.

⚠ WARNING

- **Contraindication: Pregnant animal should avoid the examination by this system as much as possible. If there is any justified reason for them to conduct the examination, take protective actions as much as possible.**
- **Target users: This system is only intended for use by radiography specialists who have been trained by Mindray Animal Medical or the agent and have read through the operator's manual.**
- **Intended use environment: The main application site is medical institutions.**
- **The service personnel not trained and authorized by Mindray Animal Medical are prohibited from opening the enclosure or panel of the equipment; otherwise, short circuit or electric shock may occur.**
- **The service personnel not trained and authorized by Mindray Animal Medical are prohibited from replacing all fuses in this system; otherwise, short circuit or electric shock may occur.**
- **To ensure system safety, do not connect a portable multi-jack socket to the system.**
- **The system can only be connected to a power grid with protective grounding; otherwise, electric shock may occur.**
- **Do not use this system with a high-frequency electrosurgical unit (ESU), high-frequency treatment equipment, or defibrillator; otherwise, the animal may suffer electric shock.**
- **To ensure system safety, do not use other peripherals or accessories than those provided or designated by Mindray Animal Medical.**
- **Signal output and input can only be connected to specified devices.**
- **It is not allowed for the operator to have contact with other animals and the electronic parts (such as the input/output terminal of the signal) of other devices that are connected to the system. Otherwise, it may produce the electrical shock to the animal.**
- **The system uses a leakage circuit breaker as the mains power breaker. Before maintaining or repairing the equipment, cut off the power supply of the entire system.**

- **Do not install irrelevant software on this system; otherwise, it may cause the system's breakdown and data loss.**
- **Do not enable the sleep mode when entering the Windows operation screen.**
- **Direct contact between the animal body and the detector is prohibited. Do not use a defibrillator while using the detector.**

⚠ CAUTION

- **Check that this equipment operates properly before using the system.**
- **Keep away from venous catheters, urethral catheters, and other catheters connected to the animal while using the system.**
- **This manual does not describe clinical inspection techniques. Operators must select the proper inspection technique based on their professional knowledge and clinical experience.**
- **When using iodine-containing contrast medium, strictly observe the instructions of the product.**
- **The image acquisition workstation monitor of the system can be used only during operation. Clinical image diagnosis must be completed by using a professional medical diagnostic display to guarantee imaging performance.**
- **Periodically maintain the equipment during the service life. When the service life ends, stop using the equipment.**
- **Turn off the input power switch before cleaning this equipment to avoid electric shock.**
- **If you want to connect the power plug of this equipment and that of the external device connected to this equipment to a socket, ensure that the socket is a wall socket with protective grounding and meets the requirements of the rated power identification plate. Use of a multi-functional socket may affect grounding and make the leakage current exceed the safety limit. Be sure to use the power cable delivered with the system.**
- **Do not connect and disconnect the system peripherals in the electrified state. This operation can only be performed by professional personnel.**
- **Do not use a USB memory device (e.g., a USB flash drive, removable hard disk) which has unsafe data. Otherwise, system damage may result.**
- **Radio waves can cause the system to work abnormally.**
  - **If this system is used near radio transmitting equipment, radio waves may interfere with the normal operation of the system. Do not use or take any devices transmitting RF signals (such as cellular phones, transceivers and radio controlled products) in the room placing the system.**
  - **If any equipment that may generate radio waves is near the system, immediately shut down the equipment to ensure normal operation of the system.**
- **If the mains supply is unstable and may affect the proper operation of the system, it is recommended to use an uninterruptible power supply.**
- **Adjust the size of the beam limiting device before pressing the Prep/ Expose button, to protect the animal from absorbing excessive X-ray radiation.**
- **Data may be lost if the system is powered off or encounters abnormal power failure during image acquisition.**
- **Always keep the system dry. Avoid transporting this system quickly from a cold place to a warm place; otherwise condensation or water droplets may form allowing a short circuit and possible electric shock.**

NOTE:

- The system is not waterproof. Avoid water splash on the surface of the equipment or water ingress inside the equipment. In the case of water splash, consult the Customer Service Department or your local distributor.
- Do not turn off the system power supply when data is being printed, saved, and transmitted; otherwise, the operation cannot be completed properly and file information may be lost
- Do not shut down the system forcibly; otherwise, the disk data may be corrupted or the system may malfunction.
- You should properly back up the system to a secure external storage media, including system configuration, settings and animal data. Data stored to the system's hard drive may be lost due to system failure, improper operation or accident.
- While the system is running, the operator should keep all the moving parts of the system and the animal within his/her field of view and pay consistent attention.
- Keep the body parts of the animal away from the moving assemblies of the system to avoid animal injury resulting from system movement.
- Keep venous catheters, urethral catheters, and other catheters connected to the animal away from moving devices.
- Disinfect and clean the components in contact with the animal before using the system.
- Check the system clock of the system periodically, to ensure the accurate examination time of the animal.
- Anti-virus and virus-killing software must be installed on the system before network connection to prevent virus attacks.
- To dispose of the system or any part, contact the Customer Service Department or your local distributor. The manufacturer is not responsible for any system content or accessories that have been discarded improperly.
- Contact the Customer Service Department or your local distributor to provide the circuit diagram, component list, legends, and calibration rules if necessary.
- The system should be warmed up for 15 minutes before performing exposure or updating the Gain map and Defect map.
- Make sure exposure dose rate is over 900 nGy/s.

1.2 Usage and Maintenance of the FPD

1.2.1 Precautions on detector usage

⚠ WARNING

- **Observe the temperature and relative humidity standards during operation, transportation, and storage. If the specified range is exceeded, the FPD performance may degrade or the detector may be damaged. Portable FPDs may cause discomfort in animals.**
- **The edges of the FPD are smooth. Hold the detector with both hands and handle with care. Avoid collision, slipping, vibration, and falling, in which case the detector may be damaged or cause injury.**

- **When using, installing, and uninstalling the detector, hold it with both hands to prevent it from falling.**

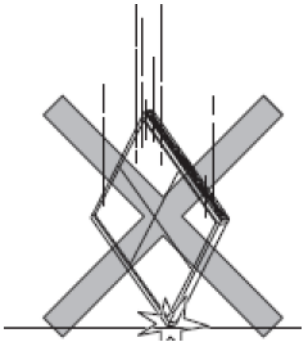

- **When the portal FPD is not in use, place it on a support (optional), tray, or in a secure container. Do not place the detector in an edge location, or lean it against a wall or bed; otherwise, it may slip.**
- **Before exposure**
  - **Condensation on the FPD may affect its operation quality.**
  - **Condensation may form when the room is suddenly heated in a cold environment. In this case, wait until the condensation disappears. Then, perform exposure.**
  - **When using air conditioning, increase or reduce the temperature gradually to avoid temperature difference between the room and detector; otherwise, condensation may occur.**
  - **When condensation forms on the FPD, do not power on the detector. Otherwise, a fire or electric shock may occur.**
- **During exposure**
  - **Do not apply excessive weight to the detector. Otherwise, it may be damaged.**
  - **Exposure must be performed with the detector and animal imaging in static state. Otherwise, performance may degrade.**
  - **Do not move the power cable or network cable during exposure, Otherwise, it may cause image noise or artifacts, even incorrect images.**
- **The detector must be used on a flat surface to avoid detector warpage. Otherwise, it may be damaged.**

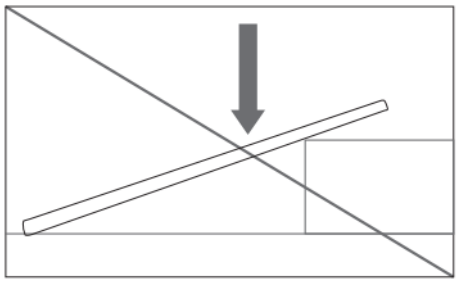

- **When load is distributed evenly, the load on the detector cannot exceed 150 kg.**

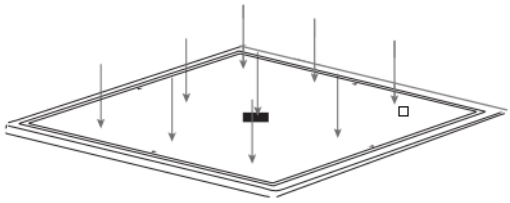

- **Avoid local load. If local load occurs on Φ40 mm boards, ensure that the load does not exceed 100 kg.**
- **If a cable is used, connect the cable to the correct connector; otherwise, the detector may be faulty or damaged.**
- **FPD cables (if any) are not hot-pluggable. Do not touch connectors and plugs with wet hands during connection and disconnection; otherwise, electric shock may occur, resulting in serious injury.**
- **If cables are used, insert the FPD into another pallet of the wall stand, and put the cable into the slot to avoid damage.**
- **Do not pull cables (if any) with force. If cables are entangled, do not pull the main body of the FPD with force. Otherwise, the cables may be damaged, causing a fire or electric shock.**
- **The equipment or system may still be affected by interferences of other devices even when those devices meet the emission requirements specified by the national standards corresponding to International Special Committee on Radio Interference (CISPR).**

1.2.2 Precautions on detector storage

⚠ WARNING

- **Observe the temperature and relative humidity standards listed in 10.2 during storage. If the specified range is exceeded, the FPD performance may degrade or the detector may be damaged. Portable FPDs may cause discomfort in animals.**
- **Do not install the detector in the following environments; otherwise, the detector may be faulty, fall down, or cause a fire or injury.**
  - **Near water facilities**
  - **Under direct sunlight**
  - **Near air conditioners or ventilation products**
  - **Near thermal sources, such as heaters**
  - **Places prone to vibration**
  - **Unstable places**
  - **Dusty places**
  - **Salty or sulphuric environment**
  - **High temperature or humidity**
  - **Freezing or condensation**
- **Keep the FPD away from combustible or corrosive gases.**
- **Keep the detector away from objects that may generate electromagnetic interferences.**

1.2.3 Precautions on detector cleaning and maintenance

⚠ WARNING

- **Observe the temperature and relative humidity standards stated in this manual during cleaning. If the specified range is exceeded, the FPD performance may degrade or the detector may be damaged. Portable FPDs may cause discomfort in animals.**
- **Do not immerse the detector in liquids, or splash liquids (such as blood, body fluid, and cleaning solution) on the detector surface. It is recommended that the detector be protected by disposable coverage. In the case that the detector comes into contact with liquids, wipe the detector with soft cloth. Power off the detector before wiping.**
- **Before cleaning the detector, power off the detector and related devices.**

Clean the detector surface with soft cloth soaked with diluted alcohol. Do not use other chemicals, solvents, detergents, cleaning solution, bleaching agents, or disinfectants. The duration of wiping does not exceed 3 minutes, and let the detector dry for at least 60 seconds before two cleaning periods.

- **Do not disassemble or modify the detector; otherwise, a fire or electric shock may occur.**

1.3 Parts that can be used within animal environment

- Components that can be used in the animal environment include:
  - Flat panel detector
  - Power supply box

2 System Overview

2.1 Intended Use

It is clinically indicated for digital radiography of the chest, abdomen, bone and soft tissue for animals.

2.2 Safety Classification

Basis of Classification	Type
According to the type of protection against electric shock	Class I
According to the degree of protection against electric shock	Type B applied part
According to the degree of protection against harmful ingress of water	The degree of protection of Flat panel detectors is IPX1, and other degrees stand for common type equipment (enclosed type equipment that does not prevent ingress of liquids).
According to the recommended disinfection and sterilization method	/
According to the degree of safety of application in the presence of a FLAMMABLE ANESTHETIC MIXTURE WITH AIR or WITH OXYGEN OR NITROUS OXIDE	EQUIPMENT not suitable for use in the presence of a FLAMMABLE ANESTHETIC MIXTURE WITH AIR or WITH OXYGEN OR NITROUS OXIDE
According to the operation mode	The equipment works in continuous operation
Whether the equipment has the application part that protects against defibrillation release effect	The equipment has no application part that protects against defibrillation discharge effect.
According to the installation and use	Non-permanently installed equipment

2.3 Power Supply Box

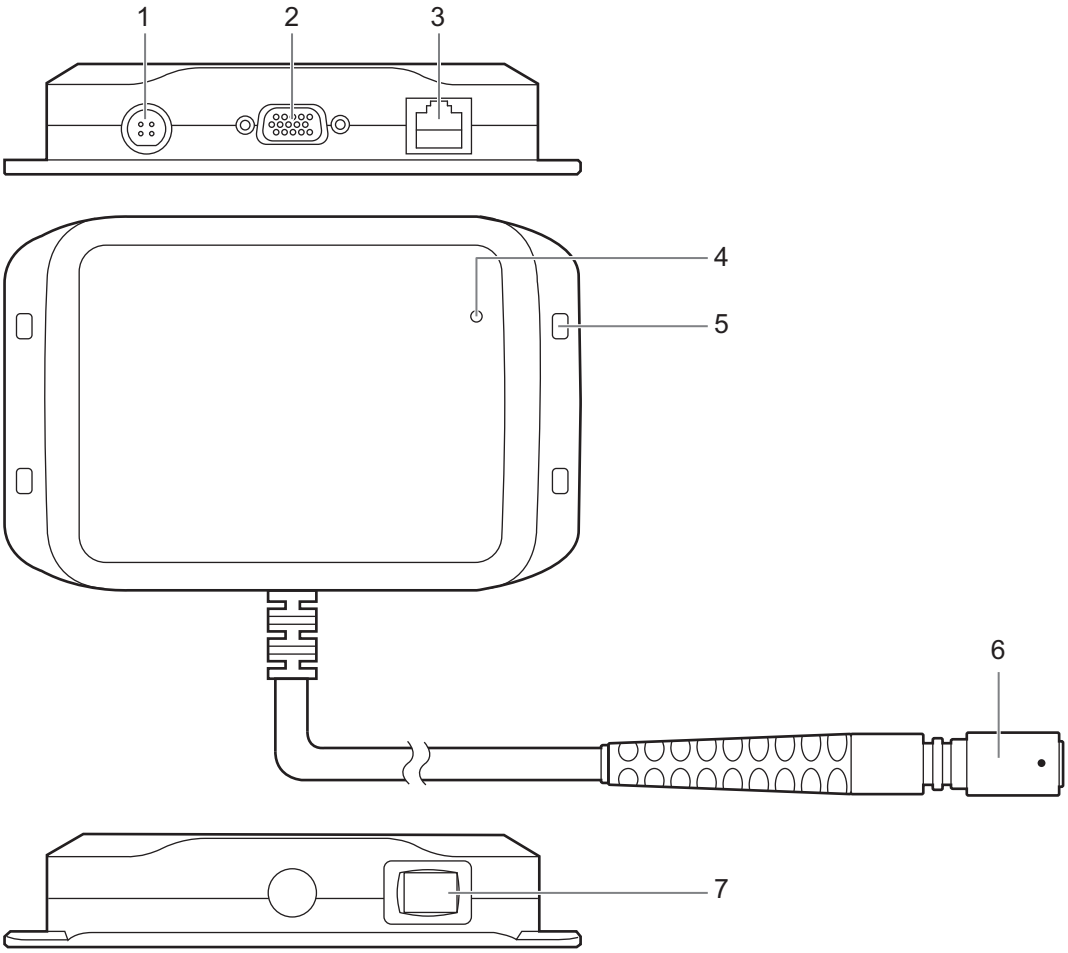

No.	Name	Description
1.	Power input port	Connects the power adapter.
2.	HVG port	Reserved.
3.	Network port	Used for connecting image acquisition workstation.
4.	Power indicator	Lights at AC supply.
5.	Mounting hole (4)	Used for fixing the power supply box.
6.	Aviation connector	Supplies power for the flat panel detector, and transmit data.
7.	Power switch	Used for turning on/off the power supply box.

2.4 Flat Panel Detector (FPD)

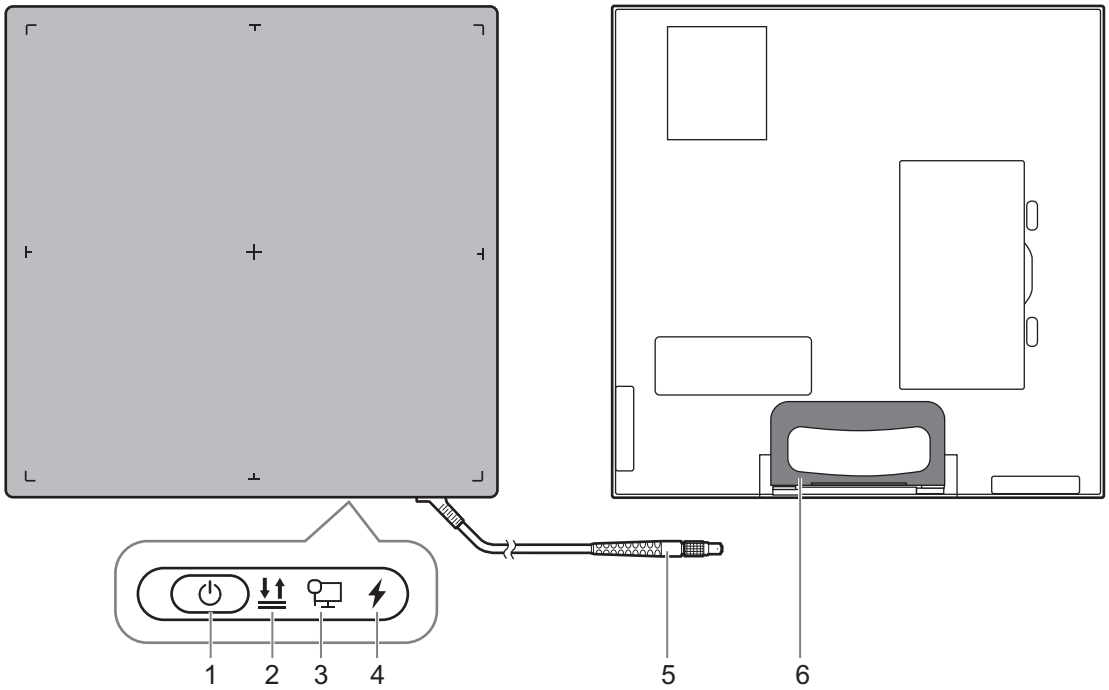

No.	Name	Description
1.	Power button	Press and hold this button for 3 seconds in the power-off state to power on the device. Press and hold this button for 3 seconds in the power-on state to power off the device.
2.	Status indicator	Indicates the working status of the FPD: • Off: The FPD is powered off, or the FPD is idle. • Blinking green: Data is being transmitted. • Blinking orange: The FPD is faulty.
3.	Link indicator	Indicates the connected status of the FPD: • Off: The FPD is powered off, or the network cable is disconnected. • Steady blue: The FPD is properly connected to the Power Supply Box.
4.	Power indicator	Indicates the power status of the FPD: • Off: The FPD is powered off. • Steady green: The FPD is powered on.
5.	Aviation connector	Used for connecting to the Power Supply Box.
6.	Handle	Used for carrying the FPD.

2.5 Operator Console Control Software Overview

By default, the system enters the registration management screen after software login. The [Register] button is in selected state, as shown in Figure 2-1.

Operate with the keyboard and mouse:

- Select to select tabs, parameters, and set the parameter values.
- Use the keyboard to input text information or parameter values.

Figure 2-1 Startup Initial Screen - Register

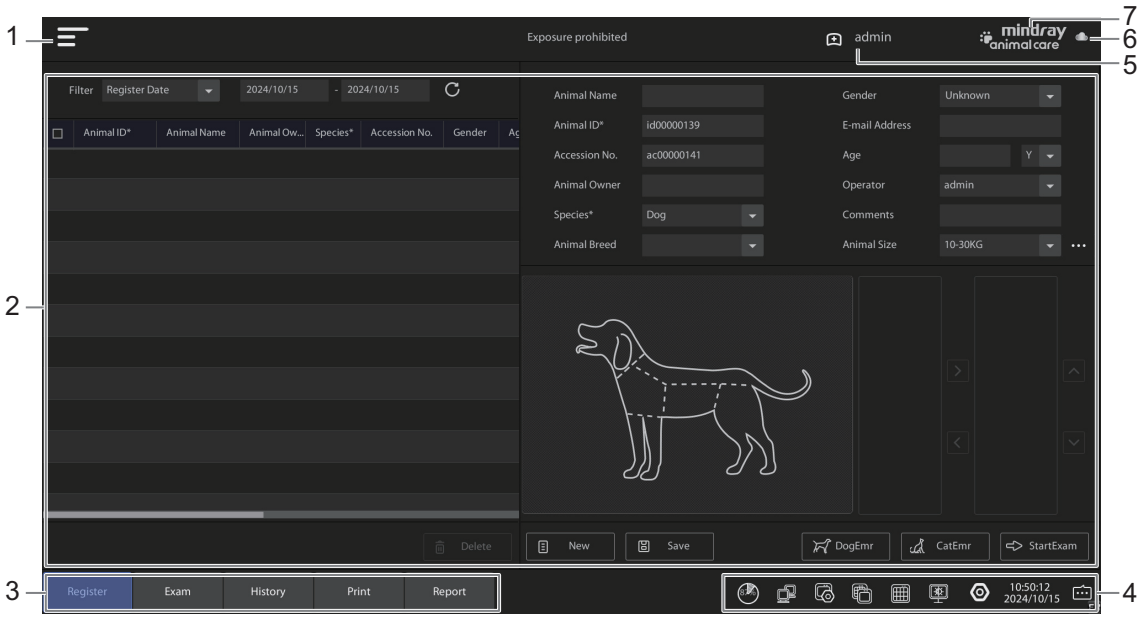

No.	Name	Description
1.	Setup button	Enter/exit setup screen.
2.	Animal registration management area	View the Worklist registered animals and local registered animals.
3.	Exam process icons area	Select to enter the corresponding function screen.
4.	System status icons area	Displays the system status icons.
5.	Login account	Displays the current login account.
6.	u-Link	Enter the u-Link setup screen.
7.	System information button	View the system information.

2.5.1 System Status Icons

Icon	Description
	Indicates the connection status of the FPD. Select to view details about the FPD.
95%	Indicates storage space. Select to enter the disk space configuration screen.
	Indicates the network connection status.
	Select to enter DICOM settings, including local, Worklist, print, storage, and so on.
	Indicates the task manager. Select to view the current system tasks.
	Indicates the DICOM task manager. Select to review the DICOM task status and redo the task.
	Select to enter the screen brightness adjustment screen to adjust the screen brightness.
	Select to hide/show the system icons.
	Select to view the operation information notification.
h:m:s YYYY/MM/DD	Displays the current system time.

2.5.2 Registration Management Screen

Figure 2-2 Register

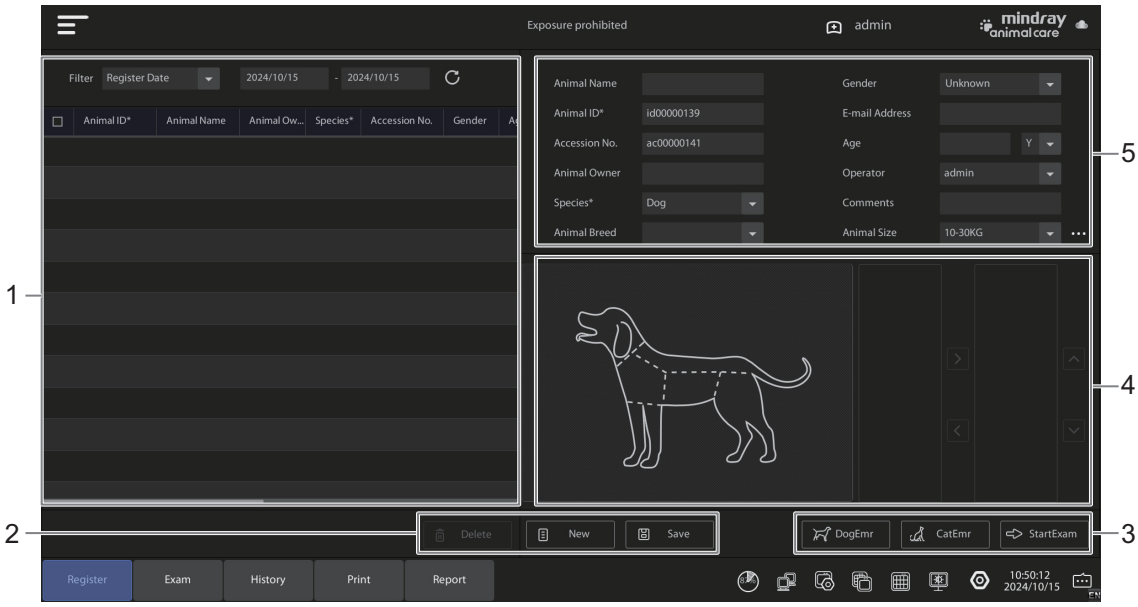

No.	Name	Description
1.	Registered animal list area	Displays the registered animals.
2.	Animal edit buttons	Add, delete, and modify animal registration information.
3.	Exam buttons	Enter the “Exam” screen. When a large number of animals need to be examined or treated, which requires quick input of animal information, you can use the emergency call registration function to register an animal.
4.	Examined body part setting area	Select the body parts of the current animal to be radiographed from the examined body part list.
5.	Animal information registration area	Input basic animal information.

2.5.3 Exposure Exam Screen

Figure 2-3 Exam

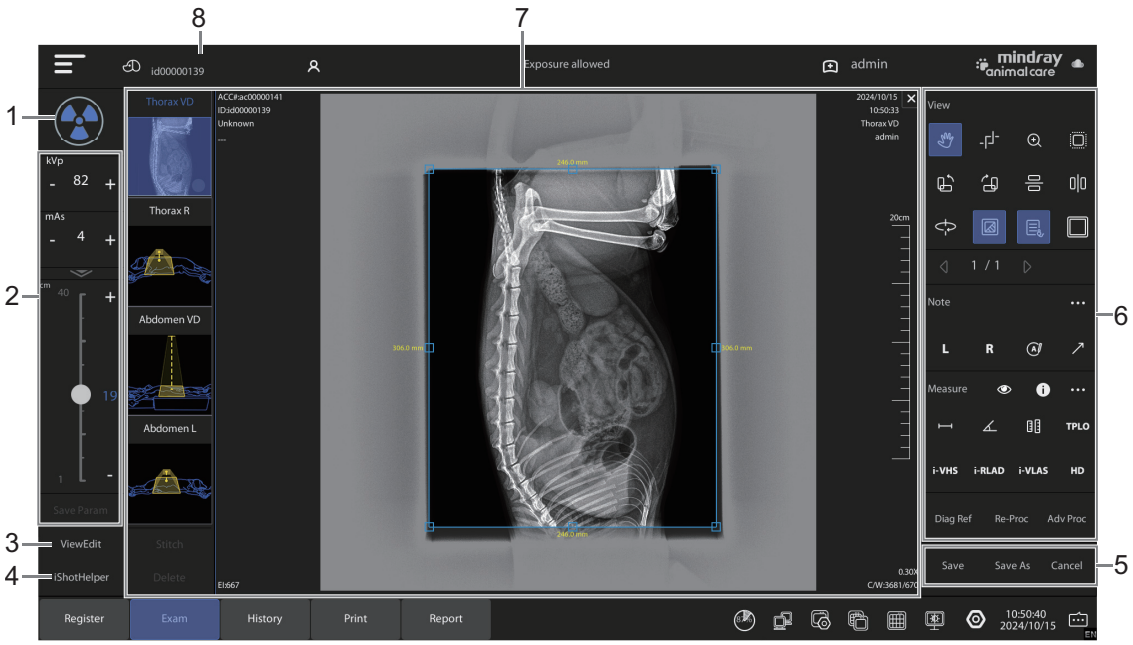

No.	Name	Description
1.	Exposure icon	Indicates the exposure status.
2.	Exposure parameter adjustment area	Displays the corresponding radiographed body part parameters. You can save the adjusted exposure parameters to the current body thickness.
3.	ViewEdit button	Edit the radiographed body parts to be exposed.
4.	iShotHelper button	View the diagrams of the animal positioning.
5.	Image confirmation area	Image operation confirmation buttons.
6.	Image operation area	Adjust image, add comments, measure, and so on.
7.	Image display area	• Displays the selected radiographed body parts and thumbnails. • Displays the acquired images and exposure parameters. A proportional scale is displayed on each image to reflect the size proportion between the display image and the actual image. The scale marks are adjusted in real time as the image is zoomed in and out, to reflect proportional changes. • Displays the diagrams of the animal positioning.
8.	Animal information area	Displays the current animal information.

2.5.4 History Exam Screen

Figure 2-4 History

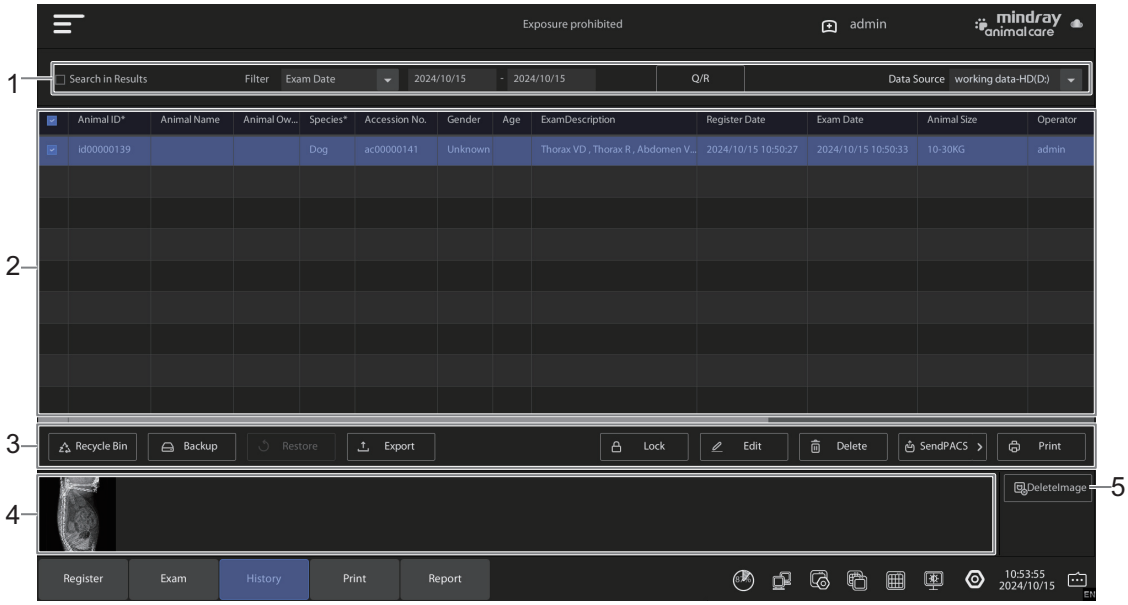

No.	Name	Description
1.	Animal information query area	Query and display animal information.
2.	Animal exam list	Display the search results in the animal exam list based on the entered content.
3.	Animal information editing buttons	Edit the selected animal information.
4.	Thumbnail display area	Displays the thumbnail of the selected history animal exam.
5.	Image delete button	Delete the image of a selected animal record.

2.5.5 Image Print Management Screen

Figure 2-5 Print

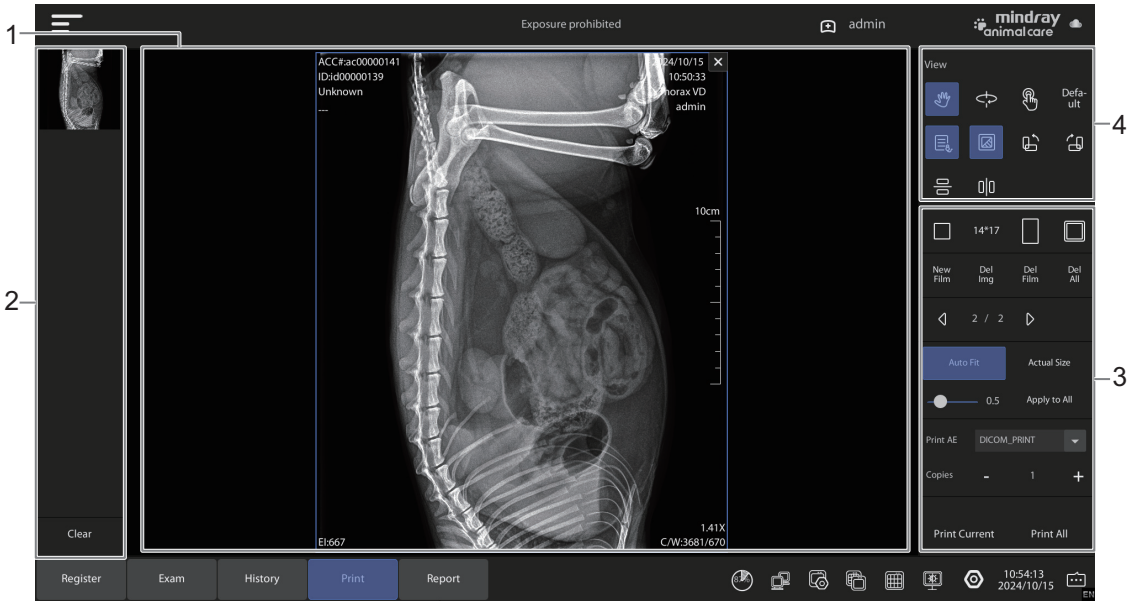

No.	Name	Description
1.	Printed image preview area	View the selected image.
2.	Thumbnail display area	Displays the thumbnails of the current exam. Select [Clear] to clear the image in the thumbnail display area.
3.	Print operation area	Set the print property and print operation.
4.	Image adjustment area	Adjust the selected image.

2.5.6 Report Management Screen

Figure 2-6 Report

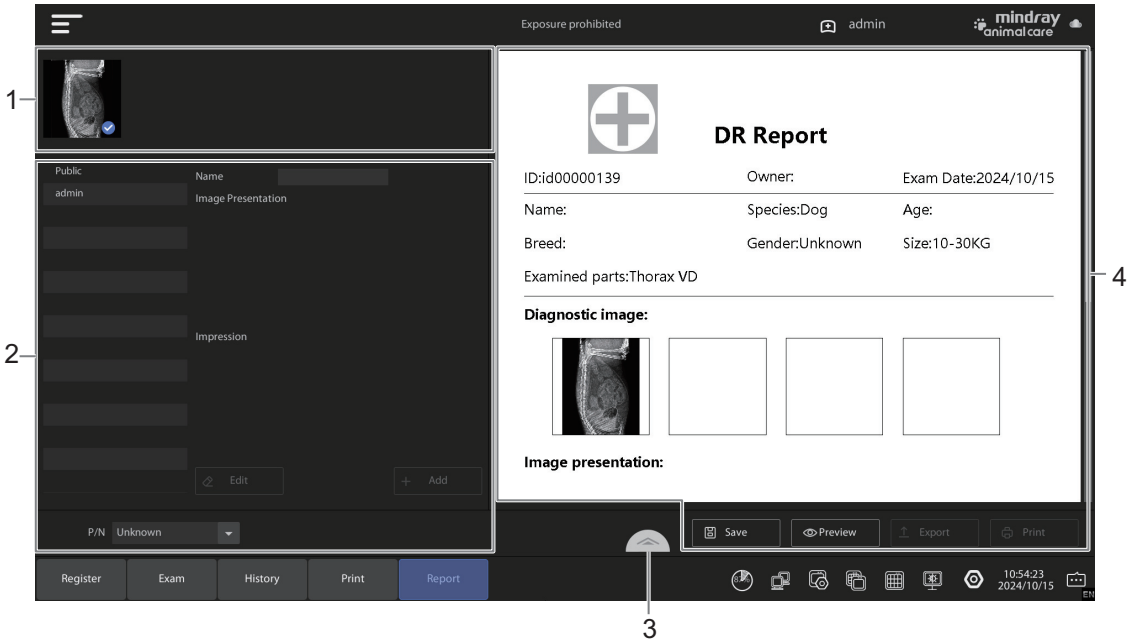

No.	Name	Description
1.	Thumbnail display area	Displays the thumbnails of the current exam.
2.	Library area	View the description of each symptom in the library.
3.	History report button	View the history report list. The selected report is displayed by default.
4.	Report editing area	Edit the selected report.

2.6 Adjust the Exposure Parameters

NOTE:

- Adjust exposure parameters correctly based on the animal's body type.
- Do not perform exposure until proper exposure parameters are selected for the animal.

The system sets default parameters for each radiographed body part. You can set the high-voltage generator according to the recommended exposure parameters.

You can adjust the exposure parameters in the exposure parameter setup area of the "Exam" screen, as shown in Figure 2-7.

Figure 2-7 Exposure Parameter Panel

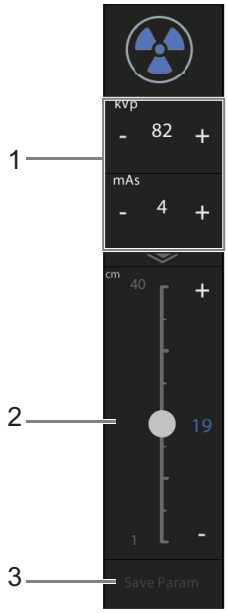

No.	Name	Description
1.	Exposure parameters area	Adjust the following exposure parameters: kV (X-ray tube voltage), mA (X-ray tube current), ms (exposure time), mAs (exposure value). Select [+]/[–] to adjust the parameter value.
2.	Body thickness parameter	Indicates the maximum distance between the front and rear surface of the body. Select [+]/[–] or drag the slider to adjust the thickness. Select to expand the body thickness panel.
3.	Parameter save button	Save the modified exposure parameters as recommended for the current body thickness.

2.7 Symbols and Warning Labels

The symbols and warning labels of this system in order to call your attention to potential hazards.

Their meanings are explained as follows:

Symbol	Description
	Refer to instruction manual/booklet

Symbol	Description
	Type-B applied part
	AC (Alternating current)
	Stand-by
	Protective earth (ground)
SN	Serial number
	Date of manufacture
	Manufacturer
CE	CE marking
	Consult instructions for use
	Temperature limit
	Humidity limitation
	Atmospheric pressure limitation
	The following definition of the WEEE label applies to EU member states only: the use of this symbol indicates that waste electrical and electronic equipment must not be disposed of as unsorted municipal waste and must be collected separately. By ensuring that this product is disposed of correctly, you will help prevent bringing potential negative consequences to the environment and human health. For more detailed information with regard to returning and recycling this product, consult the distributor from whom you purchased the product.

Symbol	Description
	RoHS (China). Administrative Measure on the Control of Pollution Caused by Electronic Information Products. Contains RoHS substances with 20 years environmentally friendly use period (EFUP).
IPX1	Protected against vertically falling water drops.
	Handle with care
	The maximum load bearing capacity of this device cannot exceed 100 kg.

3 System Preparation

3.1 Connecting the System

NOTE:

- You must use the specified Power Supply Box.
- Do not use this Power Supply Box in the conditions other than those specified.

Perform the following procedure:

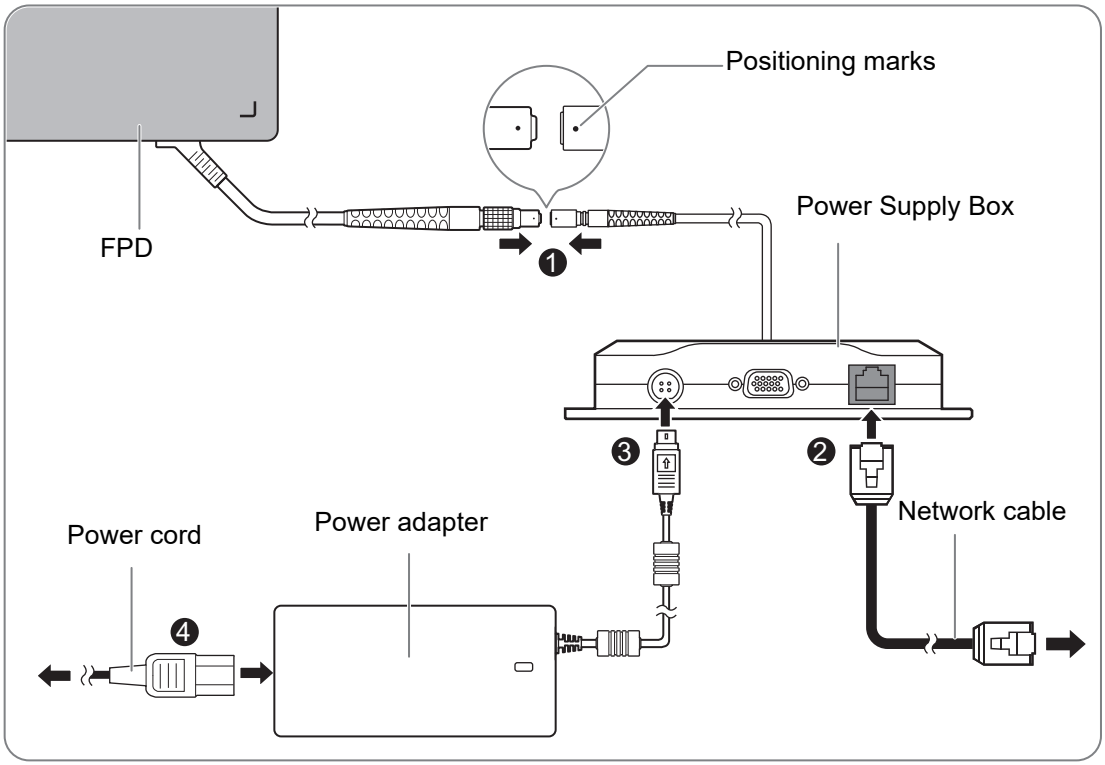

1. Align the positioning marks (●) on the two aviation connectors, and insert them in place.
2. Connect the Power Supply Box to the PC by using the supplied network cable.
3. Connect the connector of the power adapter to the adapter port of the Power Supply Box.
4. Use a three-wire cable to connect the adapter with the external power supply.

3.2 Powering On and Off the System

3.2.1 Check before Powering On

Check before the system is powered on:

- The temperature, relative humidity and atmospheric pressure meet the requirements of the operating conditions.
- There is no condensation.
- There is no distortion, damage or dirt on the system and peripheral devices.
  If any dirt is found, cleaning shall be performed, see the *System Maintenance* chapter.
- There is no cable damage (e.g., power cord). Maintain secure connections to the system at all times.
- Ensure that all connections are free from damage and remain clear of foreign object blockages.

3.2.2 Powering On

Switch the power switch button on the Power Supply Box to the <ON> position.

3.2.3 Powering Off

NOTE:

- Before powering off the Power Supply Box, ensure that you have logout the DROC software.
- After the Power Supply Box is powered off, wait for at least 1 minute and then switch on the Power Supply Box again.

Switch the power switch button on the Power Supply Box to the <OFF> position.

3.3 Login

The login screen is displayed after DROC system startup.

To ensure security, the operator must perform identity authentication before accessing the control software system of the operator console.

To log onto the system

Perform the following procedure:

1. Enter the correct user name and password on the login screen.

   The password is case-sensitive. Specific characters of the password are not displayed during input.

   The user name, password, and permissions are allocated by the system administrator.

2. Select ➡ (Login) to enter the registration management screen of the operator console control software.

To change users

Perform the following procedure:

1. Select button.
2. Enter the user name and password.

   Select to return the current login account.
3. Select (Login) to enter the registration management screen of the operator console control software.

To lock the system

Perform the following procedure:

1. Select (Setup) in the upper left corner of the screen to enter the system setup screen.
2. Select [Lock Equipment] and the system is locked.

You must log on before using the system.

To log out the system

Perform the following procedure:

1. Select (Setup) in the upper left corner of the screen to enter the system setup screen.
2. Select [Exit System] and the logout system screen is displayed:
   - [Shut down]: shut down the workstation computer.
   - [Logout]: close the operator console control software and enter the Windows operating system screen.
   - [Cancel]: return to the control software screen of the operator console.

4 Setup

4.1 System Setup

Select ☰ in the upper-left corner of the screen to enter the system configuration screen.

4.1.1 Setting the System Language

Perform the following procedure:

1. Select a language from the “Language” pull-down list.
2. Select [Apply], and restart the system as prompted.

4.1.2 Equipment Configurations

Select [Equipment Configurations].

Item	Description
Institution	The hospital name to be displayed and printed.
Device information	• Equipment type: Product model supported by the software. • Install mode: Forward installation and reverse installation.
WorkMode	Select “Demo” to enable simulated exposure: the system performs simulated exposure (generates a demo image without outputting the X-ray) when the body part graph is double-clicked on the exam management screen.

Item	Description
Input Method Editor	Set the default input method. You can also modify the input method of the operating system as required: • English (US keyboard): set the default input method of DROC to American keyboard. If the input method of the operating system has been changed, DROC will switch the input method of the operating system to American keyboard when startup. • Keep OS keyboard settings: set the input method of DROC to be consistent with that of the operating system. If the current operating system is a non-American keyboard input method, character input errors may occur, please use this option with caution. If the character input is abnormal, end the DROC from the Task Manager, change the input method of the operating system to American keyboard, and then restart the DROC.
Workflow Layout	Set the default workflow layout. When the system is configured with UltraSync, the “Display UltraSync button” is optional.
Send Image	Set the default image destination. Check whether to perform data masking when sending images to UltraSync. ***NOTE:*** When using the sending E-mail function for the first time, you need to set up the email account on the Thunderbird client of the operating system screen.

Configuring Thunderbird

Before configuring Thunderbird, ensure IMAP is enable on your E-mail account. For details, see the instructions of the mailbox.

Perform the following procedure:

1. Return to the operating system screen, and run the Thunderbird client.
2. Select the existing mail account button.
3. Enter the account name, email address and password, and then select the continue button.

   Thunderbird will automatically configure the mailbox connection.
4. Select the done button to automatically switch to the email login screen.
5. Enter the mailbox account and password, and then select the allow button to complete mailbox configuration.

4.1.3 User Management

Select [User Management]. On the user management page, you can add and delete users, change the user password, and assign permissions to common users.

TIP:

The following operations are limited to administrator users.

Enabling Access Control

The system administrator can preset the access controls, that is, whether an operator has the right to access data in the system.

Access control only can be set by the system administrator.

If “Enable access control” is selected, you must be authorized before accessing the data. If unselected, you can access all the data without authorization.

Adding a User

Select [Add] in the lower right corner of the screen, and the “Adding New User” window is displayed. You can set the user name and password.

- The user name must contain numbers or letters.
- The password must contain numbers or letters.

Changing the Password

Select the desired user from the user list and select [Change Password]. You can change the password.

Deleting a User

Select the user to be deleted from the user list and select [Delete] in the lower part of the screen. A confirmation box is displayed.

Select [OK] to delete the user, or select [Cancel] to cancel the deletion.

Assigning Permissions

You can select operation permissions for common users from the permission assignment list. After configuration, select [Save] to apply the settings.

4.1.4 Option Configuration and Authorization

Select [Option&Authorization].

This page displays the license status of the equipment and the license validity period of system functions or optional functions.

4.1.5 Detector Calibration

Select [Detector Cal.] to enter the FPD calibration screen. The screen displays calibration parameters in real time during FPD calibration, such as the current X-ray dosage, remaining time and calibration progress.

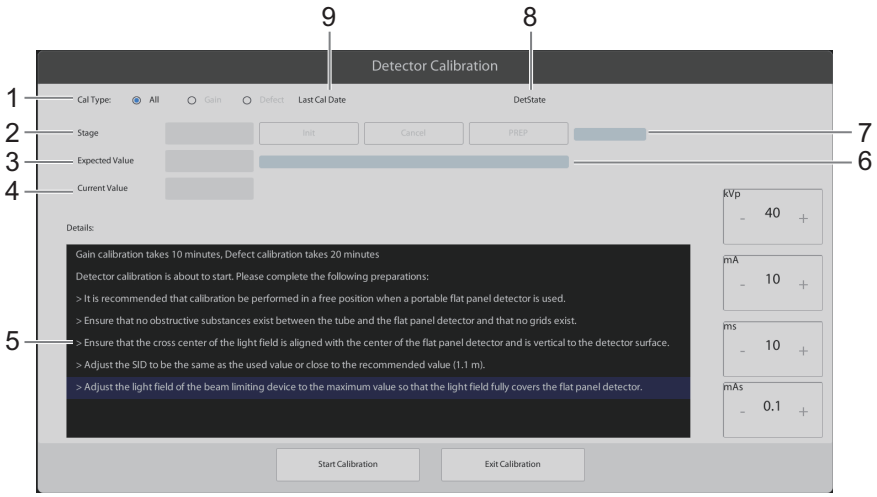

1.	Calibration type
2.	Calibration stage
3.	Expect value of the image center grayscale
4.	Current value of the image center grayscale
5.	Prompt message area
6.	Calibration process
7.	Countdown display bar for pressing the handswitch
8.	Current state of the FPD
9.	Last calibration time

NOTE:

- Users need to calibrate the detector once a year to ensure the stability of the image quality received by the detector, so as to achieve the purpose of optimizing the image quality.
- Recalibrate the FPD if it has not been in use for more than 3 months.
- Ensure that the FPD has been powered on for more than 4 hours before FPD calibration.
- Only the administrator and authorized users have the right to calibrate the FPD.
- During the calibration, ensure that X-ray fully covers the FPD.
- Ensure that no foreign substances exist between point sources during calibration.

Perform the following procedure:

1. Manually maximize the light field of the collimator (completely covering the detector). Remove the obstacles between the light field and front baffle plate of the detector assembly.

2. After positioning is completed, select [Start Calibration].

3. Perform the corresponding operations as prompted.

4. Repeat the previous step until calibration is complete.

5. Select [Exit Calibration].

4.1.6 Exam Information Display Configurations

Select [ExamInfoDisplay Configurations].

Item	Description
Image info display settings	Set whether to print animal information entries and the print positions on films.
GUI info display settings	The list on the left displays the animal information that can be selected. The list on the right displays the content that will be displayed in the animal information list of the registration management screen.

4.1.7 Register Management Settings

Item	Description
DefaultSpecies	Set the default animal type.
Animal Breed Set	Set the animal species.
Default Body Size Set	Set the weight range of the animal.
Emergency body view set	Set the animal emergency body position.
Default body view set	Set the default exam position of the animal.
Animal ID	Set whether the system automatically generates the default ID (Animal ID) during local login. Two generation modes are supported: • Manual: The system does not adopt the automatic generation rule. The ID is manually entered. • Auto: The system automatically generates the ID. You can set the prefix of this ID (such as “id”).
Accession No.	Set whether the system automatically generates the default visit number during local login. Two generation modes are supported: • Manual: The system does not adopt the automatic generation rule. The accession No is manually entered. • Auto: The system automatically generates the visit number. You can set the prefix of this visit number (such as “ac”).
Age	Used to configure the method of worklist animal age calculation. • By Actual Date and Time: The age is calculated by subtracting the actual dates. If the subtraction result is less than one year, the actual month is used as the age. If the subtraction result is less than one month, the actual number of days is used as the age. If the subtraction result is more than one year, the actual year is used as the age. • By Difference of Years: The age is calculated by subtracting years.

Item	Description
Operator	Sets operation doctor record rules.

4.1.8 Exam Configurations

Item		Description
Exposure Control Set	BodyThickness Range	Set the default body thickness range and body thickness step.
	AcqImageTime	Set the maximum exposure time of the FPD.
	Auto play iShotHelper	Set whether to auto play post assist video. When setting up auto play, you can set up the play interval.
	AfterExp *n*s auto switch to next bodyview	Set the time interval for automatically switching to the next position after exposure.
	Record exposure parameters	Set whether to save the exposure parameter into the DCM file.
ImageProcessSet	SetBodyIcon Font Size	Set the font size of body part tag: A greater the value means a larger font size of the added body part tag during image browsing.
	Set Comment Font Size	Set the font size of comment: A greater the value means a larger font size of the note on the image browsing screen.
	Diag Ref image library manager	Set the diagnostic reference graph library.
	Gray Window Factor	• Window Width Adjust Factor: A larger value means a higher speed for window width adjustment and a greater value change. • Window Center Adjust Factor: A larger value means a higher speed for window level adjustment and a greater value change.
	Modality Settings	Set the device type that is written when the DICOM file is saved.
	Preview Image After Exposure	If this option is selected, the unprocessed preview image is displayed after exposure.
	Display animal information on the image	Set whether the animal information is displayed by default.
	Enable Automatic bodyview Labeling	Set whether to automatically add body part tags based on body parts.
	Save Pure Image After Exposure	Set whether to save the Pure image when the animal is saved.
	Save Raw Image After Exposure	Set whether to save the Raw image when the animal is saved.

Item		Description
ImageProcessSet	Image Auto Rotation/ Flipping	Used to automatically rotate/flip the image according to the selected body position.
	Enable the image rotation calibration mode	Used to calibrate the image direction after the FPD is installed. For detailed information, contact the Customer Service Department or your local distributor.
PlugInCable	Auto Send Failed Task	If this option is selected, the system will automatically send failed tasks after the data cable is connected.
	Auto Send UnSent	If this option is selected, the system will automatically send images not sent within the specified time period after the data cable is connected. Auto Send Period: The options are today, past three days, and past one week.
CloseExamSet	Auto Send To PACS While Closing Exam	When this function is enabled, the new acquired images will be automatically sent to the PACS workstation when the “Exam” screen is closed.
	Auto Send To Mico+ While Closing Exam	When this function is enabled, the new acquired images will be automatically sent to the UltraSync when the “Exam” screen is closed.

4.1.9 DICOM Image Printing Configuration

Item	Description
Display animal information on the image	Set whether to display animal information on films.
Display the scale	Set whether to display a proportional scale on films.
Print Font Size	Set the font size of animal information printed on film: the greater the value, the larger the font.
Close Thumbnail If Print Success	After print is successful, the system automatically clears the thumbnails.
Print Layout Config	Enable or disable the function of typesetting by body position. • Delete: Delete the configured body position selected. The default option cannot be deleted. • Modify: Modify the film size, print layout and film direction of the configured body position. • Add: Configure the film size, print layout and film direction of the new body position.

Item	Description
When Plug In Cable	Automatic print image configuration when the network cable is plugged in: • Auto Print Failed Task: When this option is selected and the network cable is plugged in, the system automatically reprints the failed tasks. • Auto Print Unprinted Images: When this option is selected and the network cable is plugged in, the system automatically prints unprinted images within the set period. Auto Print Period: The options are today, past three days, and past one week.

4.1.10 Help Manual

View the detailed operating instructions.

4.1.11 Log and Configuration Maintenance

Item		Description
Log&Maintain	Delete Log?	Set whether to delete logs automatically.
	Log Keeping Days	Set the number of days during which logs are retained, if automatic log deletion is configured.
Log Export	Select Disk to Export	Select destination for export, and select [Export]: Select the time period for export, and select [Start] and wait. When the export is completed, the system prompts the corresponding information under “select the disk to export”. Select [Remove Device], and select the USB flash disk to be removed on the removal screen for safe removal.
User Config Management	Add Backup	Select to enter the backup dialog box, and enter the name of the system configuration to be backed up. After you select [OK], the added backup is displayed in the backup list.
	Delete Backup	Select to delete the backup from the backup list.
	Restore Config	Select to restore system configuration from backup.
	Restore Default Config	Select to restore the default system configuration, which is not displayed in the backup list and cannot be deleted.

4.1.12 Statistic

You can use the statistics function to view the workload under each account, and count the total number of persons and exposures based on time segments, examined parts, and other criteria.

You can export the statistical results as a .CSV file through [Export Statistics].

Use [Export Detailed Exposure Record] to export the records (including the operator, exam information, exposure parameters, and the deleted image exposure data) to a CSV file by the operator.

4.1.13 Parameter Manager

On the parameter manager screen, you can set view parameters, exposure parameters, and post-processing parameters, and restore parameters.

Select [Logout] on the menu bar to exit from the “Parameter Manager” screen and enter the Windows operating screen. Run “DrocApp.exe” shortcut icon on the desktop to start the DROC.

View Definition

Expand all/ Hide all: To display all exam bodyviews, select [Expand all]; to hide all bodyviews, select [Hide all].

Configuring the Post-processing Parameters

On this page, you can configure the image post-processing parameter, such as set the default style, save as a new post-processing parameter, set the default parameter, and modify the post-processing parameter value.

- On the Post-processing Parameter panel, select a Root node, panel, animal type, bodypart, bodyview, and then right-click, an operation menu is displayed.

  To set the selected style as a default style, select [Set as default[. Then, the default styles of all views under the Root node, panel, animal type, bodypart, and bodyview are changed
- After you select a post-processing parameter, right-click the parameter, and an operation menu is displayed.
  - Save as a new post-processing parameter: To save the post-processing parameter as a new parameter, select [Save as…].
  - Set the default post-processing parameter: To set the selected post-processing parameter as the default parameter, select [Set as default].
  - Edit the post-processing parameter: After you select a post-processing parameter, details of the parameter are displayed on the right side. After modification, select [Save the Change].

Configuring the Exposure Parameters

On this page, you can configure the exposure parameter.

Edit an exposure parameter: After you select an exposure parameter, details of the parameter are displayed on the right side. After modification, select [Save the change].

Configuring the View Parameters

On this page, you can configure the view parameter, such as modify the view parameter value, set the default view parameter.

Select a view and right-click on it. An operation menu is displayed.

- Set the default parameter: To set a selected view parameter as a default parameter, select [Set as default] from the menu.

- Modify the view parameter value: After you select a view parameter, details of the parameter are displayed on the right side. Modify the values of the parameter and then select [Save the change] to save the modified value.

Restore Factory Parameters

Select [Restore factory Param] on the menu bar to select the parameters to be restored as required.

4.1.14 Prepay Installment

Display the prepay installment information. For detailed information, contact the Customer Service Department or your local distributor.

4.1.15 Report Configurations

Configure logo icon of the hospital, edit report template, select report printer, edit knowledge base and configure the report settings.

Item	Description
Hospital Logo	Provide the function of managing LOGO images of the hospital. • Clear: Clear the existing hospital logo image. • Change: Change the image information of the hospital logo.
Template	The default report template can be selected. • Select [Edit] to edit the report template. • Select [Restore] to restore the templates to the original factory default.
Printer	Set the default printer to print report.
Knowledge base	Provide the functions of knowledge base selection, import, export, and loading factory. • Select [Import] to import the local knowledge base. • Select [Export] to export the knowledge base to the local device. • Select [Restore] to restore the knowledge base to the factory default.

Adding a Report Template

Perform the following procedure:

1. Select [Edit] to edit the report template.
2. Select [New] to generate a blank template.

Item	Description
Add text	Follow the steps below: **1.** Select Aa from the lower toolbar, click and drag the cursor to add the size of text box. **2.** Double-click the text box to input text and click outside to end the editing. You can view and edit the control properties in the left column.
Add the text with the print label	Follow the steps below: **1.** Right-click the text and select print label. **2.** Select the text icon from the pop-up dialog box. Print label of the control is displayed in the left column. When you edit the text with print label in the report editor, the print label will be recognized and the corresponding animal data will be loaded into the text, but the animal data cannot be edited.
Add text box	The manual input of the report can be added to the edit box. Follow the steps below: **1.** Select T from the lower toolbar, press and hold the left mouse button to add and adjust the size and position of text box. **2.** Double-click the box to input text and click outside to end the editing. You can view and edit the control properties in the left column. **3.** Right click and select the print label. **4.** In the displayed print label dialog box, select the print label of the edit box. Print label of the control is displayed in the left column. ***NOTE:*** The print label must be added to the edit box, otherwise the edited content in the diagnosis report will not be saved.
Alignment Control	Follow the steps below: **1.** Hold down the <Ctrl> button, and then click to select the controls to be aligned. **2.** Select the alignment button at the bottom of the window. The specified alignment operation is performed.

Editing System Template

Perform the following procedure:

1. Select [Edit] to edit the report template.

2. Select [Open] and browse to select the template you want to edit.

Modify the template as needed. For details, see *Adding a Report Template* above.

4.1.16 Lock Equipment

You can use the device locking function to lock the system. To unlock the screen, log in again.

4.2 System Date and Time Setup

NOTE:

Ensure that the current exam date and time are the same as the system date and time.

Click the Time/Date of the system status icons area to set the date format.

Switch to Windows interface to set the system date and time if necessary.

4.3 Network Setup

Select to enter the Network Setup screen.

The network setup screen displays the network connection of the equipment and the IP address of the network adapter.

- Network card name: Displays all network card names in the system.
- Connection status: Displays the connection status of the currently selected network card.

4.4 Disk Space Configuration

Select (Disk space setup) to enter disk space setup screen.

Item	Description
Image Delete Method	• Don’t auto delete image: Delete the image manually as needed. • Auto delete image by time: When the maximum storage time is reached, the system will automatically delete the images that have been saved for a long time. • Auto delete image by capacity: When the remaining storage space reaches the set value, the system will automatically delete the images according to the storage order. ***NOTE:*** The deleted images will be saved to the recycle bin. You can restore the deleted image from the recycle bin before the recycle bin is cleared.

Item	Description
Recycle	• Do not automatically clean up the recycle bin: Clean the recycle bin manually as required. • Automatically clean up the recycle Bin: When the maximum storage days are reached, the device automatically deletes the animal data of the recycle bin that exceeds the storage days. ***NOTE:*** The cleaned data in the recycle bin cannot be recovered. Back up animal data before enabling the auto clean recycle bin function.

4.5 DICOM Setup

Select (DICOM Setup) to enter the DICOM setup screen.

4.5.1 DICOM Local Preset

Select “Local” tab, you can configure the local DICOM entity name and port number.

4.5.2 DICOM Worklist Preset

On this page, you can set DICOM Worklist parameters and test connection.

Worklist Configuration

Item	Description
Enable Worklist	If it is selected, the Worklist function will be enabled.
AE Title	Application Entity title. It is consistent with that of the Worklist server.
Port	DICOM communication port. The port should be consistent with that of the Worklist server port.
IP Address	IP address of the Worklist node. The value consists of four segments of integers ranging from 0 to 255.
Verification	Verify whether each worklist node is connected.

Worklist Search Conditions

Item	Description
Time Range	Set the date range.
Refresh interval(s)	Set the worklist communication interval.
Identity	Set the identity of a task list.
Modality	Set the device type for obtaining information.

Item	Description
Age	Set the calculation method of age in the animal information obtained from worklist.

Body View Map

Item	Description
Enable bodyviewMap	If it is selected, body part mapping is enabled.
Set the mapping label	Set the DICOM field for the worklist server to store body part information.
Worklist Code	Enter the information (such as the standard thorax position) sent by the worklist.
Adding a body part mapping	Follow the steps below: **1.** In the worklist check item, enter the information sent by the worklist. **2.** In the body part list, select the body part corresponding to the DROC application. **3.** Select [Add] > [Save] to add the body part mapping to the mapping list.
Deleting a body part mapping	Select a body part in the body part list, and select [Delete] > [Save] to delete.

4.5.3 DICOM Print Preset

On this page, you can set DICOM Print parameters and test connection.

Item		Description
Print Server List	Enable Print	If it is selected, the print service is enabled.
	Add	You can add and configure multiple print nodes. Follow the steps below: **1.** Select [Add], and enter the following information about the added node in sequence: AE Title, port number, IP address and print brightness, **2.** Select [Save]. The added node is displayed in the print node list. The attribute of the added node is displayed in the node attribute box.
	Delete	You can delete the currently selected print node.
	Set as default	You can configure a default print node based on a default node.
	Cancel Default	You can cancel the currently selected default print node.
	Verification	Verify the connectivity of each DICOM print node.
Node Attribute	AE Title	Name of a DICOM node entity
	Port	Port number of the service provided by the DICOM node.
	IP address	IP address of the DICOM node. The value consists of four segments of integers ranging from 0 to 255.
	Brightness	You can select the print effect after brightness compensation adjustment.

Item		Description
Print Configuration	Min density	Enter the minimum density of the film.
	Max density	Enter the maximum density of the film.
	Border density	Set the density between film images.
	Empty Density	Set the density of the surrounding area.
	Destination	Specify where the file is exposed.
	Medium Type	Specify print medium.
	Inter Type	Select how the printer magnifies an image to fit the film.
	Print Border	Set whether to print image border.
	Polarity	Set the default image polarity.
	Priority	Specify print job priority.
	Config info	Enter configuration information in the field.
	Owner Tag	Displayed on the control software screen of the operator console. The value can be modified based on the requirements of the hospital
	Film Tag	You can change the value based on the requirements of the hospital. You can enter letters and numbers.
	Set Film Size	sets the default film size. Select [Set Film Size] to select a film size.

4.5.4 DICOM Storage Preset

On this page, you can set DICOM Storage parameters and test connection.

Item		Description
Storage Server List	Enable Storage	If it is selected, the storage service is enabled.
	Add	You can add and configure multiple storage nodes. Follow the steps below: **1.** Select [Add], and enter the following information about the added node in sequence: AE Title, port number, and IP address. **2.** Select [Save]. The added node is displayed in the storage node list. The attribute of the added node is displayed in the node attribute box.
	Delete	Select to delete the selected node in the storage node list.
	Set Default	You can configure a default storage node based on a default node.
	Cancel Default	You can cancel the currently selected default storage node.
	Verification	Verify the connectivity of each DICOM storage node.
Node Attribute	AE Title	Name of a DICOM node entity.
	Port	Port number of the service provided by the DICOM node.
	IP Address	IP address of the DICOM node. The value consists of four segments of integers ranging from 0 to 255.
	Enable Lossless Compression	If it is selected, the lossless compression is enabled.

4.5.5 MPPS Preset

On this page, you can set DICOM MPPS parameters and test connection.

Item	Description
Enable MPPS	If it is selected, the MPPS service is enabled.
AE Title	Name of a DICOM node entity.
IP Address	IP address of the DICOM node. The value consists of four segments of integers ranging from 0 to 255.
Port	Port number of the service provided by the DICOM node.
Verification	Verify the connectivity of the node.

4.5.6 DICOM SC Preset

On this page, you can set DICOM SC parameters and test connection.

Item	Description
Enable Storage Commit	If it is selected, the Storage Commit service is enabled.
AE Title	Name of a DICOM node entity.
IP Address	IP address of the DICOM node. The value consists of four segments of integers ranging from 0 to 255.
Port	Port number of the service provided by the DICOM node.
Verification	Verify the connectivity of the node.

4.5.7 DICOM Q/R Preset

On this page, you can set DICOM Q/R parameters and test connection.

Item	Description
Enable Q/R	If it is selected, the Query/Retrieve service is enabled.
AE Title	Name of a DICOM node entity.
IP Address	IP address of the DICOM node. The value consists of four segments of integers ranging from 0 to 255.
Modality	Set the device type, DX and DR are optional.
Port	Port number of the service provided by the DICOM node.
Verification	Verify the connectivity of the node.

4.6 Screen Brightness Management

Select to enter the display brightness adjustment screen.

Drag the slider to adjust the screen brightness.

- [DefaultBright]: to restore the default brightness.
- [SetDefaultBright]: to set the current brightness as the default.

4.7 System Information

Select mindray animal care button on the upper right corner of the control software.

The version windows is displayed, and the information includes the DROC, FPD, the high voltage generator and the collimator, and so on.

5 Starting an Exam

5.1 Registration Management

You can start an animal exam in the following situations:

- Local registration
  - New animal information: to start a new animal exam, animal information must first be entered.
  - Return visit registration: to start a new exam for animal who is already registered, the recorded information can be obtained through history exams.
  - Emergency: Animal ID information is generated quickly.
- Worklist registration: register animals in the worklist.

5.1.1 Local registration

After startup, the system automatically enters the registration management screen. When the system is in another interface, select [Registration Management] to return to the registration management screen.

Manual Registration

Perform the following procedure:

1. Enter the animal information in the animal information registration area.
2. Select the body parts of the current animal to be radiographed from the examined body part list.
   a. Select an exam part: Select the exam part area on the animal diagram, and load the body view library under the corresponding exam part.
   b. Select body view: Select to select a body view in the body view library, and then select [>] to add it to the body view list on the right side.
      Select [<] to delete the selected body view from the selected body view list.
      In the selected body view list, use [∧]/[∨] to adjust the position order.
3. Select [Save] to register a new animal.

   The completed registration animal information is displayed in the animal information list.

Emergency Registration

When a large number of animals need to be examined or treated, which requires quick input of animal information, you can use the emergency call registration function to register an animal. Select the

[DogEmr] or [CatEmr] button to enter exam, the system automatically generates an animal ID and directly enters the “Exam” screen.

NOTE:

After emergency call examination is completed, the animal information can be modified on the “History” screen.

Return Visit Registration

On the history screen, double-click an animal information in the animal list to enter the exam screen.

select [Additional exam] or [New exam] to perform the return visit registration.

- Additional exam: Continue to use the previous animal registration information.
- New exam: Register a new animal based on the existing animal information.

Worklist Registration

Select to download Worklist animal information.

The system automatically refreshes to obtain the worklist animal information.

TIP:

For details about automatic refresh configuration, see *DICOM Worklist Preset* section in *Setup* chapter.

5.1.2 Registration Information Management

You can manage registered animal information, including viewing, modifying, and deleting animal information.

Viewing Animal Information

In the animal information list, select the registered animal for examination, and view the selected animal information in the animal information registration area.

Modifying Animal Information

TIP:

The animal information after radiography can be modified on the history screen.

You can modify the information about animals before radiography (examination).

Perform the following procedure:

1. In the animal information list, select the animal record to be modified and the animal information displays in the animal information registration area.
2. Modify the animal information as required in the animal information registration area.

3. Select [Save] to save the changes.

Deleting Animal Information

In the animal information list, select a record and select [Delete] to delete the selected animal record.

5.1.3 Animal Information Query

You can query animal records based on filter criteria.

The query process automatically starts after search criteria are entered.

- When the criteria is set to “All”, the search bar is displayed on the right. Fuzzy search is supported. Input query conditions in the text box. The content can contain “*” or be blank for fuzzy query.
- When the condition is set to “Register Date”, the time range is displayed, and the date range is selected by the pop-up box.

5.2 Exposure

Perform the following procedure:

1. Register the animal information, and then select [Start Exam] to enter the exam screen.
2. Selecting a radiographed body view.

   The radiographed body views selected during registration are displayed in the thumbnail area.

   Select the radiographed body view to be exposed in the thumbnail area, and the corresponding radiographed body view parameters are loaded to the exposure parameter area.

   NOTE:

   Select [ViewEdit] to reset the exposure body views. Body views that have been filmed cannot be deleted.
3. Adjust the range of the light field according to the selected position.
4. (Optional) Use the parameter adjustment controls to adjust the exposure parameters if necessary.
5. Perform the exposure.

   After image acquisition ends during the exposure process, the acquired image thumbnails are displayed in the thumbnail area and the exam will be displayed on the “History” screen.

   NOTE:

   If needed, repeat the steps 3 to 5 above to perform exposure again for the same body view.

6 Image Browsing and Processing

On the “Exam” screen, you can browse the images acquired through exposure, process and diagnose the images, and determine whether to accept the images.

6.1 Image Display

The image display area displays the currently acquired images or history images.

A proportional scale is displayed on each image to reflect the size proportion between the display image and the actual image. The scale marks are adjusted in real time as the image is zoomed in and out, to reflect proportional changes.

The animal information area displays the current animal information.

The image displays the exposure parameters and radiation dose.

6.2 Thumbnail

The image thumbnail of the selected exam appears in the thumbnail area on the screen

- On the “Exam” screen: the current acquired images are displayed in the thumbnail area.
- On the “History” screen: the images of the selected exam are displayed in the thumbnail area.

6.3 Image Operation

Common processing tools are provided for performing image display operations. The following figure shows the corresponding icons.

Icon	Name	Description
	Image roaming	Pan the image.
	Cropping	Crops images.
	Magnifier	Magnifies a portion of an image.

Icon	Name	Description
	Local window	Enables automatic window width and position in local areas.
	90º left rotation	Rotates left by 90º.
	90º right rotation	Rotates right by 90º.
	Up and down mirroring	Reverses image display up and down.
	Left and right mirroring	Reverses image display left and right.
	Rotation	Rotate the image at any angle.
	Positive/Negative image	Flips an image between positive and negative display.
	Animal Information Display	Displays animal details on an image, including the basic animal information and exposure parameters.
	Multi-cell Display Setup	Set the image layout.
/	Right mouse button	Adjusts the window width and position, and position identifier.
/	Save	Save the adjustment result to the image.
/	Re-Proc	Load the original image and reprocess the image with the default post-processing parameters of the current body position.

Image Adjustment

Slide the screen in the image area to adjust the window width and position. Press and hold the right mouse key to adjust:

- Drag upward to reduce the window position value.
- Drag downward to increase the window position value.
- Drag to the left to reduce the window width.
- Drag to the right to increase the window width.

The current window width and position of an image are displayed in the lower-right corner of the image window.

When the local window exists, the internal window adjustment is applied to the local window image, and the external window adjustment is applied to the entire image. When the local window does not exist, the window adjustment is applied to the entire image in the image window.

Cropping

Perform the following procedure:

1. Use the default crop box in the image or select to set the crop size.
2. Adjust the crop box:

– Adjust the size: select and drag the 8 small boxes of the crop box area to adjust the crop box size.
– Adjust the position: move the mouse pointer to any of the four sides of the crop box, and after the mouse pointer turns into a hand shape, drag the crop box to move.

NOTE:

The maximum size of the crop box cannot exceed the image area.

3. Select [Save] to accept image cutting result.

Select [Re-Proc] to restore the image to its original status.

Magnifier

Select to enter the magnifier state. Select and hold the image area to display the magnifier, which is used to zoom in on a local area of the image. Release to hide the magnifier.

Rotate

Perform the following procedure:

1. Select .

2. Select and hold the image area to rotate clockwise or counterclockwise to rotate the image at any angle.

Local Window

Select to display the local window. The window width and position for image display in the local window are optimized for local images and different from those of the entire window.

Positive/Negative Image Display

When browsing images, select to display an image in positive or negative mode. To adapt to film interpretation habits, the system displays exposed images in negative mode by default.

Animal Information Display

Select to display or hide the animal exam information.

Rotation and Mirroring

You can rotate and mirror images during image browsing by using / / / , including 90° left/right rotation and up/down mirroring. During rotation and mirroring, the marks and tags of the image change their positions accordingly, but they do not flip over or rotate.

Image Scaling

Scroll the mouse wheel in the image display to zoom in or out on the image.

Image Panning

In the image display area, click and drag to pan the image.

Paging

When images are displayed on multiple pages, select ◁ or ▷ to turn to the previous or next page to view the images on each page.

The page number is displayed between the paging buttons. The first digit indicates the current page number, and the second digit indicates the total pages.

Multi-cell Display Setup

Select the multi-cell display button ▣, and the supported display formats are displayed for selection.

6.4 Annotation

⚠ WARNING

You must ensure that the entered comments are correct. Incorrect comments may lead to misdiagnosis.

Comments can be added to an image to bring attention, annotate or communicate information observed during the examination.

The following table lists the comment buttons and functions.

Icon	Name	Description
L	Left Position Identification	/
R	Right Position Identification	/
•••	More Position Identification	Select “DV”, “VD” and input the custom position identification.
	Text Annotation	Enter text annotation status.
	Clear	Clear the selected text annotation.
	Clear All	Clear all text annotations.
↗	Arrow	Enter arrow annotation status.

6.4.1 Position Identification

The position identifiers in the right part of the screen include L (left), R (right), DV (Dorsoventral), VD (Ventrodorsal), and custom tags.

Perform the following procedure:

- To add a position identifier: select a position identifier button to add the position identifier to the image.
  Select ••• to add “DV”, “VD” or custom tags.
- To move the position identifier: select the position identifier on an image and drag and drop the identifier to change its position on the image. When an image is saved, the added position identifier is rasterized to the image.
- To cancel the position identifier: a position identifier button in selected state is in highlighted color. When the button is selected again, the position identifier is not added.
  Select [Re-Proc] to remove all position identifiers on the image.
- Select [Save] to save the position identifier to the image.

6.4.2 Text Annotation

Adding Text Annotations

Perform the following procedure:

1. Select to enter the text annotation status.

   You can also press <Ctrl> and <M> buttons on the keyboard to enter the text annotation status.

   Character cursor appears on the image.
2. Move the cursor to the position to be added, and click to confirm the target position.
3. Use the keyboard to enter a character comment.

   Press <Enter> to move the cursor to the new line.
4. Select again to exit the text annotation status.

   Or, press Ctrl+M button again on the keyboard to exit the text annotation status.

Editing Text Annotations

Perform the following procedure:

1. Select to enter the text annotation status.
2. Move the cursor to the text annotation to be edited, and click to select.
3. Use the keyboard to edit the text annotation.
4. Select again to exit the text annotation status.

Deleting Text Annotations

Perform the following procedure:

1. Select to enter the text annotation status.
2. Deleting annotations:
   - To delete one text annotation: move the cursor to the text annotation and double-click, and there is a frame around the selected text annotation.
     Select or press <Delete> button on the keyboard.

– To delete all text annotations: select .

3. Select again to exit the text annotation status.

6.4.3 Arrow Annotation

Adding Arrow Annotations

Perform the following procedure:

1. Select to enter the arrow annotation status.
2. Select and drag on the image to move the arrow to the target position.
   – To adjust the shape and angle: select and drag to adjust to the desired orientation.
   – To adjust the position: select and drag to move the arrow to the target position.
3. Select again to exit the arrow annotation status.

Editing Arrow Annotations

Perform the following procedure:

1. Select to enter the arrow annotation status.
2. Select [...] in the measurement area, shape and angle adjustment marks appear on both ends of the arrow and position adjustment mark appear in the middle.
   – To adjust the shape and angle: select and drag to adjust to the desired orientation.
   – To adjust the position: select and drag to move the arrow to the target position.
3. Select again to exit the arrow annotation status.

Deleting Arrow Annotations

Perform the following procedure:

1. Select to enter the arrow annotation status.
2. Delete arrow annotations:
   – To delete one arrow: select [Clear Last] to delete the recently-added arrow. Repeat this operation to delete the added arrows chronologically.
   – To delete all arrows: select [Clear All].
3. Select again to exit the arrow annotation status.

6.5 Measurements

⚠ WARNING

Be sure to measure areas of interest from the most optimal image plane to avoid misdiagnosis from inaccurate measurement values.

⚠ CAUTION

- **Select the proper animal image and measurement tools. Only qualified professionals can decide the appropriate measurements and results.**
- **Confine measurement calipers to the actual Region of Interest (ROI). Measurements that extend beyond the ROI will be incorrect.**
- **Using the [Clear All] will clear the measurement caliper and all data in the result window.**

NOTE:

If the image has been modified, save the modified image first and then perform the measurement.

There are two kinds of measurement tools: Routine and Application.

6.5.1 Basic Operations and Buttons

The following descriptions for buttons and buttons are used during performing measurements.

Buttons	Basic Operations
Left mouse button	Click the item in the measurement menu. During the measurement, press the left mouse button to confirm the current operation and proceed to the next operation. ***NOTE:*** Unless otherwise specified, “Click” refers to “press the left mouse button.”
Mouse	Move the cursor.

6.5.2 Measurement Menu

TIP:

A measurement tool can be activated by selecting the item. It is described as “Select... in the measurement menu” in the following procedures.

Shortcut buttons of measurement items are as shown in Figure 6-1.

Figure 6-1 Shortcut Buttons of Measurement Items

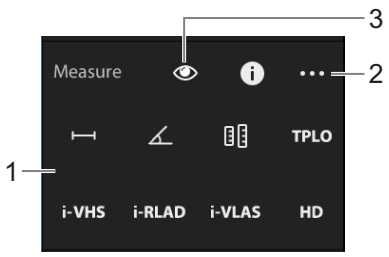

1.	Shortcut buttons of measurement items. • : Distance • : Angle • : Geom verify • TPLO: Tibia Plateau Leveling Osteotomy • i-VHS: Vertebral Heart Score (with measurement results) • i-RLAD: Radiographic Left Atrial Dimension (with measurement results) • i-VLAS: Vertebral Left Atrial Size (with measurement results) • HD: Hip Horizontal Angle Other application measurement items: • VHS: Vertebral Heart Score • RLAD: Radiographic Left Atrial Dimension • VLAS: Vertebral Left Atrial Size • M-VLAS: Modified-Vertebral Left Atrial Size (with measurement results)
2.	Measurement Menu
3.	Display/Hide measurement results

Select [...] button to enter the measurement menu as shown in Figure 6-2.

Figure 6-2 Measurement Menu

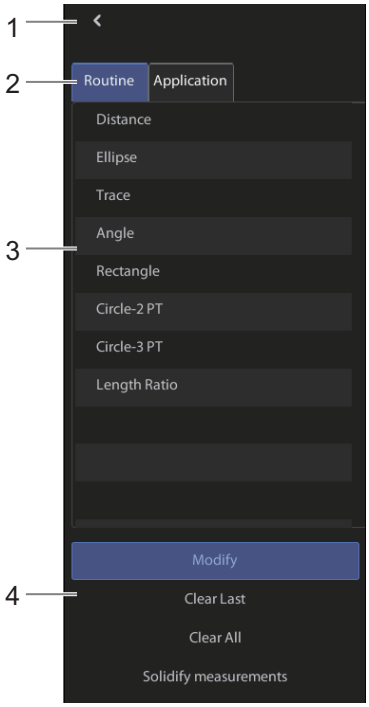

1.	Select to exit the measurement status.

2.	Select to switch between the routine measurement menu and application measurement menu.
3.	Select the measurement item to start the measurement.
4.	• Select [Modify] to enter the measurement editing status. • Select [Clear Last] to delete the latest measurement. • Select [Clear All] to clear all measurements. • Select [Solidify measurements] to add the calipers to the image.

6.5.3 Measurement Caliper

A measurement caliper is a graphic consisting of several points and a straight line or curve drawn on the image.

Fixed/Active End

The ends of calipers can be active or fixed. The active end is called a Cursor.

Caliper End Number

Different caliper end numbers are displayed in the caliper end and results window to distinguish different measurements.

6.5.4 Results Window

The measurement window displays the conducted measurement's result and the engaging measurement in real time.

Results Display

The latest results display in the results window in time sequence.

- When viewing the results: If the results window is full, the oldest value will be replaced according to the "first in, first out" rule.

  A maximum of 8 results can display in the results window.
- To identify the measurement results, numbers are used in the numerical results window.

Moving the Results Window

To move the results window:

1. Select and hold the results window to drag it to the desired position.
2. Release the results window to fix it.

6.5.5 Routine Measurements

Distance

Measures the distance between two points on the image.

Perform the following procedure:

1. Select [Distance] in the measurement menu.

2. Determine the starting point of the position to be measured on the image, and then click.
3. Move the cursor to the end point and click to set the end point and the result displays in the results window.
   - Select and drag ✚ on the measurement caliper to adjust the position of the end point.
   - Select and drag ○ on the measurement caliper to adjust its position.

Ellipse

Measures the area and circumference of an ellipse region on the image

Perform the following procedure:

1. Select [Ellipse] in the measurement menu.
2. Determine the starting point of the first axis of the ellipse on the image, and then click.
3. Move the cursor to the desired point and click to set the end point of the first axis of the ellipse.

   The second axis appears on the screen.
4. Moving the cursor will increase or decrease the ellipse from the fixed axis. Move the cursor to trace the area of interest as closely as possible, and click on the image to anchor the ellipse region.
   - Select and drag ✚ on the measurement caliper to adjust the position of the end point.
   - Select and drag ○ on the measurement caliper to adjust its position.

Trace

Measures the area and circumference of a closed region on the image.

Perform the following procedure:

1. Select [Trace] in the measurement menu.
2. Determine the starting point on the image, and then click.
3. Move the cursor along the target to trace the outline of the target.
4. Click and the trace line will be closed with a straight line connecting the start and end points.

   The trace will also be closed when the cursor is very near to the starting point.
   - Select and drag ✚ on the measurement caliper to adjust the position of the end point.
   - Select and drag ○ on the measurement caliper to adjust its position.

Angle

Measures the angle of two crossing planes on the image and the range is: 0° to 180°.

Perform the following procedure:

1. Select [Angle] in the measurement menu.
2. Set two line segments as described in “Distance” section above.

   The angle appears in the results window after setting the line segments.

– Select and drag ✚ on the measurement caliper to adjust the position of the end point.
– Select and drag ○ on the measurement caliper to adjust its position.

Rectangular

Measures the pixel average and standard deviation on the rectangular.

Perform the following procedure:

1. Select [Rectangle] in the measurement menu.
2. Determine the starting point on the image, and then click.
3. Move the cursor to the target point and click.

   The pixel average and standard deviation appear in the results window.

   – Select and drag ✚ on the measurement caliper to adjust the position of the end point.
   – Select and drag ○ on the measurement caliper to adjust its position.

Circle

Measures the area and circumference of a circle region on the image.

Perform the following procedure:

1. Select [Circle-2PT] in the measurement menu.
2. Click on the image, the cursor appears on the screen.
3. Move the cursor to the target area and click to confirm the circle position.
4. Click on the image to anchor the circle region.

   – Select and drag ✚ on the measurement caliper to adjust the circle size.
   – Select and drag ○ on the measurement caliper to adjust its position.

Length Ratio

Measure the length ratio of two lines.

Perform the following procedure:

1. Select [Length Ratio] in the measurement menu.
2. Set two line segments as described in “Distance” section above.

   The ratio value appears in the results window after setting the line segments.

   – Select and drag ✚ on the measurement caliper to adjust the position of the end point.
   – Select and drag ○ on the measurement caliper to adjust its position.

6.5.6 Application Measurements

Geom Verify

The image will be magnified in the process of image generation. The function of geometric correction is to reduce the measurement error by correction.

Perform the following procedure:

1. Select [Geom Verify] in the measurement menu.
2. Draw a calibration line to display the length of the line.

   The measurement correction line has the same function as the “Distance” measurement.

   After the calibration line is drawn, a dialog box pops up to prompt the user to input the actual length of the calibration line.

   NOTE:

   Select [Close] in the input box to clear the correction line and exit the geometric correction function.

3. Select [OK] to correct the current caliper.

   After the calibration is completed, the scale changes accordingly, and the icon (Geom verify) is displayed beside the scale, indicating that the calibration has been performed.

   The calibrated effect is valid for all measurement items. For example, the display length of the measurement calibration line becomes the input length of the user.

   Select [Geom Verify] again to clear the last geometric correction result and restart the function.

TPLO Measurement

Perform the following procedure:

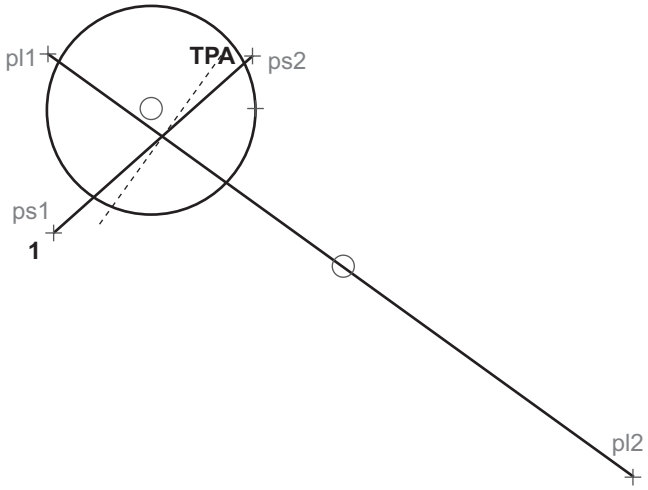

1. Select [TPLO] in the measurement menu.

   The TPLO tool appears in the image.

2. Mark the two points: ps1 and ps2 at the edge of the tibial plateau.
3. Mark the two points: The pl1 of the tibial plateau and the pl2 of the accessory bone joint. At the intersection with line ps1ps2, the vertical line of line pl1pl2 is displayed by a dotted line.
4. Mark the center and radius of the cut tibial head with two points. Modify the center position and radius.

   Measurement result:

TPA = Angle between line ps1ps2 and the vertical line of line pl1pl2

Saw Radius: Radius of the circle

i-VHS Measurement

Perform the following procedure:

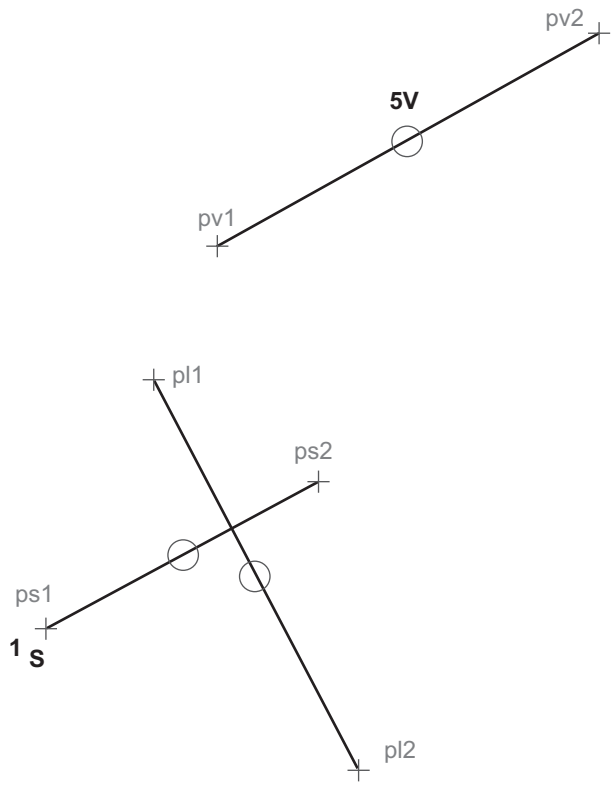

1. Select [i-VHS] in the measurement menu.

   There are 6 adjustable nodes (pl1, pl2, ps1, ps2, pv1, pv2) in the image, and 5V is displayed in the pv1pv2 line.

2. Measure the long axis of the heart (L):

   The first point, pl1, is placed on the ventral border of the left main stem bronchial bifurcation, and the second point, pl2, is placed on the more distant point of the cardiac apex, the size that reflects the overall dimensions of the left atrium and left ventricle.

3. Measure the short axis of the heart (S):

   Draw a perpendicular to the long axis at the widest cardiac width in the central third of the heart, and place points ps1 and ps2 at the two intersections of the perpendicular and the outline of the heart respectively.

4. Measure the length of 5 vertebrae:

   Place the point pv1 at the front end of the fourth vertebra and the point pv2 at the end of the eighth vertebra.

   Measurement result:

   VHS (v) = pl1p12 (long axis) + ps1ps2 (short axis)

NOTE:

The line pl1pl2 and the line ps1ps2 are vertical to each other.

i-RLAD Measurement

Perform the following procedure:

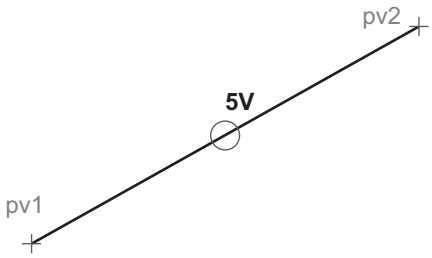

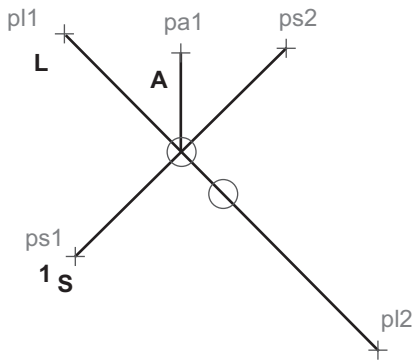

1. Select [i-RLAD] in the measurement menu.

   The i-RLAD tool appears in the image, providing 7 adjustable nodes: pl1, pl2, ps1, ps2, pa1, pv1, pv2.

2. Measure the long axis of the heart (L):

   The first point, pl1, is placed on the ventral border of the left main stem bronchial bifurcation, and the second point, pl2, is placed on the more distant point of the cardiac apex, the size that reflects the overall dimensions of the left atrium and left ventricle.

3. Measure the short axis of the heart (S):

   Point ps2 is placed at the dorsal junction of dorsal edge of the left atrium and dorsal border of the caudal vena cava; draw a long axis vertical line from point ps2, and place point ps1 at the intersection with the ventral side of the heart.

4. Measure the left atrial boundary:

   Place point pa1 at the border of the left atrium.

5. Measure the length of 5 vertebrae:

   Place the point pv1 at the front end of the fourth vertebra and the point pv2 at the end of the eighth vertebra.

Measurement result:

RLAD (v) = line A (pa1)

NOTE:

- The line pl1pl2 and the line ps1ps2 are vertical to each other.
- One end of line A is fixed at the intersection of line pl1pl2 and line ps1ps2 and at an angle of 45° with the short axis and the long axis. Adjust pa1 to confirm the line A.

i-VLAS Measurement

Perform the following procedure:

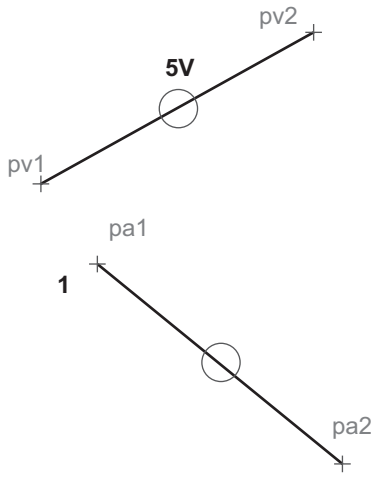

1. Select [i-VLAS] in the measurement menu.

   i-VLAS tools appear in the image, providing 4 adjustable nodes: pa1, pa2, pv1 and pv2.

2. Measure Left Atrium (A):

   Place the first point pa1 on the ventral end of the left and right branches of the main trachea, and the second point pa2 on the left atrium at the junction of the posterior vena cava and the dorsal side of the posterior vena cava.

3. Measure the length of 5 vertebrae:

   Place the point pv1 at the front end of the fourth vertebra and the point pv2 at the end of the eighth vertebra.

   Measurement result:

   VLAS (v) = pa1pa2

HD Measurement

Perform the following procedure:

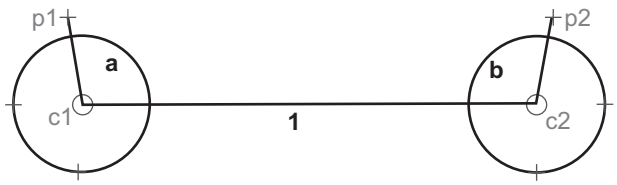

1. Select [HD] in the measurement menu.

   HD tool appears in the image.

2. Adjust the center and radius, and place the center of the two circles on the center of the two femurs.

3. Drag p1 generates line c1p1 in real time, and place point p1 on the anterior border of the acetabulum.

4. Drag p2 generates line c2p2 in real time, and place point P2 on the anterior border of the acetabulum.

   Measurement result:

   Angle between the line c1p1 and the line c1c2; angle between the line c2p2 and the line c1c2.

   A smaller angle indicates greater joint laxity.

M-VLAS Measurement

Perform the following procedure:

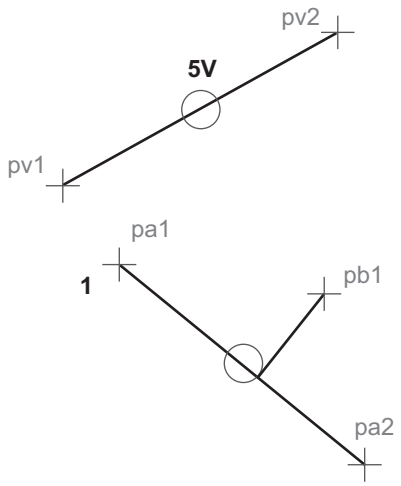

1. Select [M-VLAS] in the measurement menu.

   M-VLAS tools appear in the image, providing 5 adjustable nodes: pa1, pa2, pb1, pv1 and pv2.

2. Measure Left Atrium (A):

   Place the first point pa1 on the ventral end of the left and right branches of the main trachea, and the second point pa2 on the left atrium at the junction of the posterior vena cava and the dorsal side of the posterior vena cava.

3. Measure the distance from the most distal boundary of the left atrium to pa1pa2:

   Place the third point pb1 at the most distal end of the left atrium and intersect vertically with the pa1pa2 through the line pb1.

4. Measure the length of 5 vertebrae:

   Place the point pv1 at the front end of the fourth vertebra and the point pv2 at the end of the eighth vertebra.

Measurement result:

M-VLAS (v) = VLAS + line (pb1) = pa1pa2 + line (pb1)

VHS Measurement

Perform the following procedure:

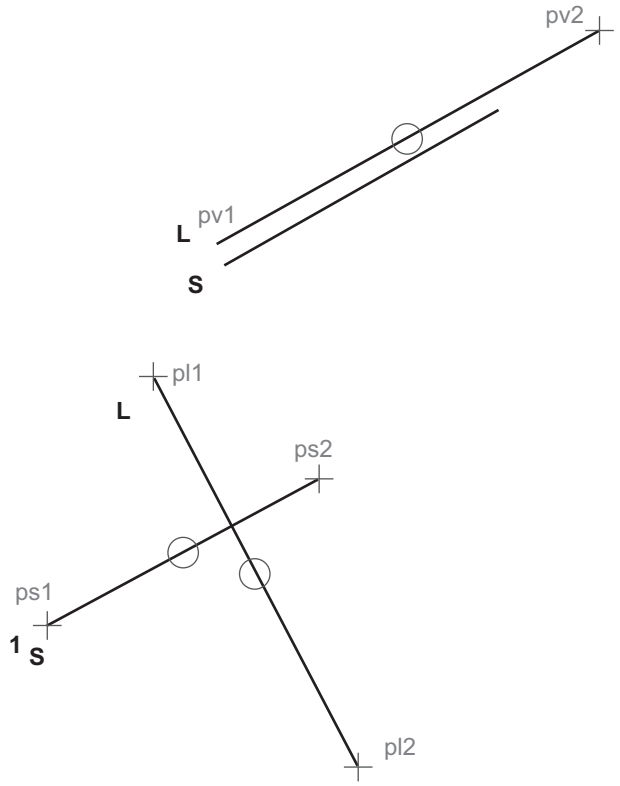

1. Select [VHS] in the measurement menu.

   There are 6 adjustable nodes (pl1, pl2, ps1, ps2, pv1, pv2) in the image.

2. Measure the long axis of the heart (L):

   The first point, pl1, is placed on the ventral border of the left main stem bronchial bifurcation, and the second point, pl2, is placed on the more distant point of the cardiac apex, the size that reflects the overall dimensions of the left atrium and left ventricle.

3. Measure the short axis of the heart (S):

   Draw a perpendicular to the long axis at the widest cardiac width in the central third of the heart, and place points ps1 and ps2 at the two intersections of the perpendicular and the outline of the heart respectively.

4. Measure VHS:

   Place point pv1 at the most anterior end of the fourth vertebra and adjust the pv2 to ensure that the VHS measurement line is parallel to the cone.

NOTE:

- The line pl1pl2 and the line ps1ps2 are vertical to each other.

- The VHS measurement line consists of two parallel segments, aligned at the pv1 end, and their lengths change with pl1pl2 and ps1ps2 respectively, and are equal to them.

RLAD Measurement

Perform the following procedure:

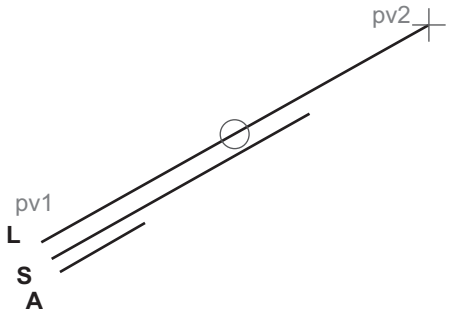

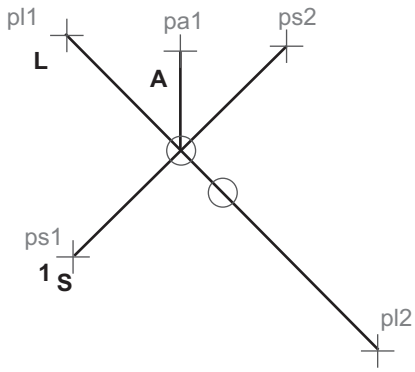

1. Select [RLAD] in the measurement menu.

   The RLAD tool appears in the image, providing 7 adjustable nodes: pl1, pl2, ps1, ps2, pa1, pv1, pv2.

2. Measure the long axis of the heart (L):

   The first point, pl1, is placed on the ventral border of the left main stem bronchial bifurcation, and the second point, pl2, is placed on the more distant point of the cardiac apex, the size that reflects the overall dimensions of the left atrium and left ventricle.

3. Measure the short axis of the heart (S):

   Point ps2 is placed at the dorsal junction of dorsal edge of the left atrium and dorsal border of the caudal vena cava; draw a long axis vertical line from point ps2, and place point ps1 at the intersection with the ventral side of the heart.

4. Measure the left atrial boundary:

   Place point pa1 at the border of the left atrium.

5. Measure RLAD:

Place point pv1 at the most anterior end of the fourth vertebra and adjust the pv2 so that the RLAD measurement line is parallel to the cone.

Reference range: greater than 1.8 indicates left atrium dilatation (increase)

NOTE:

- The line pl1pl2 and the line ps1ps2 are vertical to each other.
- One end of line A is fixed at the intersection of the line pl1pl2 and the line ps1ps2 and at an angle of 45° with the short axis and the long axis. Adjust point pa1 to confirm the line A.
- The RLAD measurement line consists of three parallel lines, aligned at the pv1 end. The length of the three lines changes with the pl1pl2, ps1ps2, and pa1 to the intersection of pl1pl2 and ps1ps2, and are equal to them.

VLAS Measurement

Perform the following procedure:

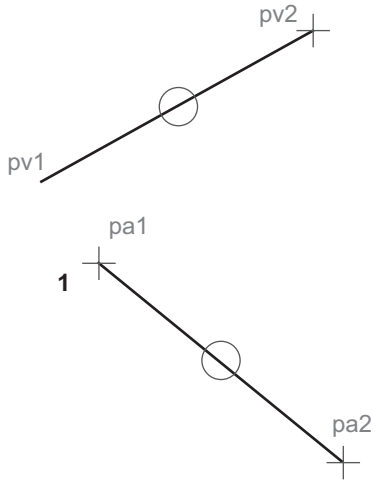

1. Select [VLAS] in the measurement menu.

   VLAS tools appear in the image, providing 4 adjustable nodes: pa1, pa2, pv1 and pv2.

2. Measure Left Atrium (A):

   Place the first point pa1 on the ventral end of the left and right branches of the main trachea, and the second point pa2 on the left atrium at the junction of the posterior vena cava and the dorsal side of the posterior vena cava.

3. Measurement VLAS:

   Place point pv1 at the most anterior end of the fourth vertebra and adjust the pv2 so that the VLAS measurement line is parallel to the cone.

   Reference range: normal range is 1.4 -2.2, and ≥2.3 indicates left atrium dilatation (increase).

   NOTE:

   The length of VLAS measurement line varies with the length of pa1pa2 and is equal to it.

6.6 Image Postprocessing

On the Exam screen, select [Adv Proc], the parameter adjustment subpane is displayed, as shown in Figure 6-3. You can adjust the image postprocessing parameters.

Figure 6-3 Image Postprocessing Menu

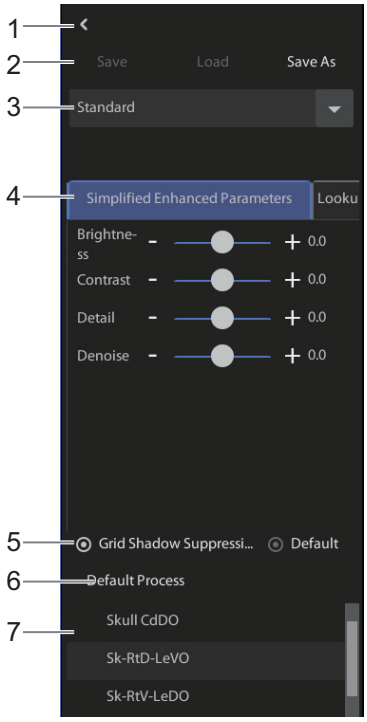

1.	Select to exit the image post-processing menu.
2.	• [Save]: to save the set parameters. The saved parameters will be the default ones for the next exam. • [Load]: to restore the default parameters and reprocess the image. • [Save as]: to save the current parameter as a set of custom parameters. After selecting the button, the input parameter naming dialog box is displayed.
3.	Select the drop-down box to select the enhanced processing solution.
4.	Select to switch among different parameter groups. The corresponding parameter adjustment panel is displayed. The parameters can be adjusted by dragging the slider horizontally or selecting the Increase and Reduce buttons
5.	Set whether to implement grid shadow suppression on the image.
6.	Select to load the original image and reprocess the image with the default post-processing parameters of the current body position.
7.	Load the default post-processing parameters of the selected body part.

Simplified Parameter Mode

Parameter	Description
Brightness	The smaller the value, the dimmer the image. The greater the value, the brighter the image.
Contrast	The smaller the value, the weaker the image contrast and layering effect. The greater the value, the higher the image contrast and layering effect.
Sharpness	The smaller the value, the weaker the image sharpness and less details. The greater the value, the higher the image sharpness and more details.
Denoise	The smaller the value, the stronger the image noise. The greater the value, the weaker the image noise.

Optimization Curve Adjustment (Look-up Table)

You can change the global image effect by adjusting the optimization curve, to achieve the desired image quality. The optimization curve is determined by the control point position, slope of the curve passing the control point, and the optimization parameters for the curve endpoint.

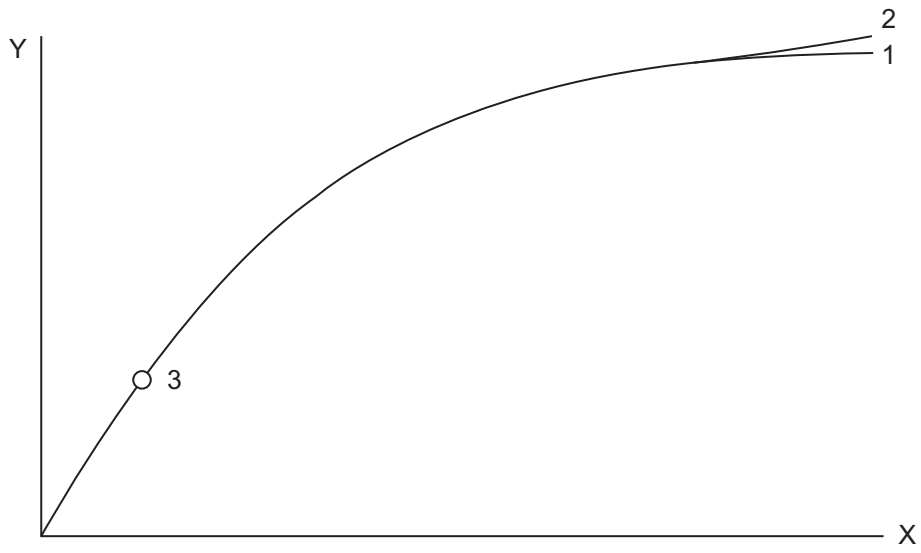

X axis	Input pixel
Y axis	Output pixel
1	Tail end parameter 1
2	Tail end parameter 2
3	Control point

The specific adjustment parameters are as follows:

Parameter	Description
X-axis (brightness) of the optimization curve control point	You can change the value of Brightness to adjust the image brightness. Increase the parameter value, and the entire image (including bone tissue and soft tissue) becomes brighter. Reduce the parameter value, and the entire image becomes dimmer.
Y-axis of the curve control point	Change the y-axis to change the display effect of the soft issue on the image. When Y is changed to a smaller value, the soft tissue on the image becomes brighter. When Y is changed to a greater value, the soft tissue on the image becomes dimmer.
Slope (contrast) of the curve control point	Change the value of Contrast to change the global contrast of an image.
Curve endpoint optimization parameter (Tail)	This parameter is used to change the shape of the curve tail, in order to change the display effect and customization of the soft tissue close to the background. Compared with tail parameter 1 of the curve, tail parameter 2 displays more soft tissue close to the background.

Dynamic Compression

You can reduce the dynamic range of an image to display more specific information.

Parameter	Description
Compression	You can reduce dynamic compression to reduce the change range of overall brightness trend of the image and reduce the significant black-and-white difference.
Beta	This parameter is used to change the display range of the high-density tissue area (which corresponds to the white part of the image), in order to improve the display details.
Correction Factor	This parameter is used to control the correction degree of the gray value. The following figure shows how the corrected value changes with the gray value. 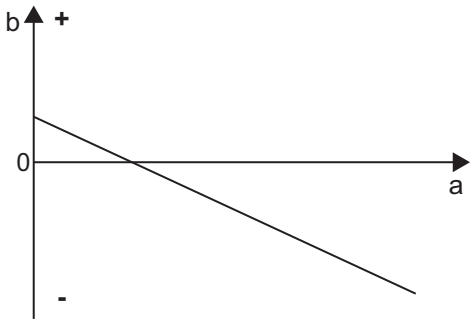 a: Gray value; b: Correction value

Detail Enhancement

Detail enhancement only changes the local detail contrast of an image. It does not affect the global display effect.

Parameter	Description
Size 1	This parameter is used to change the thickness of the corresponding side to the contrast of a detail (such as trabecular bone) of the pixel size of a source image. The smaller the parameter value, the higher the enhancement level, and vice versa. When the parameter is set to 1.0, the details of the specific layer are not enhanced. The detailed graph of the layer contains many noises. Therefore, the noises are increased when the details are enhanced.
Size 2	This parameter is used to change the thickness of the corresponding side to the contrast of a detail of the pixel size of two source images. The detailed layer graph corresponding to the parameter also contains many noises. The noise size is greater than that of Size 1 and therefore is of greater granularity.
Size 3	This parameter is used to change the thickness of the corresponding side to the contrast of a detail of the pixel size of four source images. The noises corresponding to the parameter are less than those of Size 1 and Size 2. However, the noise size of Size 3 is greater than those of Size 1 and Size 2 and therefore is of greater granularity. The noises of great granularity are increased when the detail contrast of the layer graph is enhanced.
Size 4	This parameter is used to change the thickness of the corresponding side to the contrast of a detail of the pixel size of eight source images. The layer graph corresponding to the parameter contains few noises. Therefore, no obvious noises are caused when the layer graph is enhanced.
Size 5	This parameter is used to change the thickness of the corresponding side to the contrast of a detail of the pixel size of 16 source images. The layer graph corresponding to the parameter contains no noises.
Size 6 and Size 7	These two parameters are used to change the thickness of the corresponding side to the contrast of a detail of the pixel size of 32 and 64 source images, respectively. When the values of Size 5, Size 6, and Size 7 are reduced, the contrast between large tissues is increased whereas the noise display is less obvious.
Enhancement factor	The value ranges from 0 to 3.5. It is an overall adjustment value of image enhancement. The smaller the value, the lower the sharpness and the softer the image is. The greater the value, the higher the sharpness and contrast are, and the clearer the details.

Noise Suppression

Noise suppression is used to suppress the image noise and smooth the image.

Parameter	Description
Noise Suppression	• 0: No noise reduction • 1: Minor noise reduction • 2: Moderate noise reduction • 3: Major noise reduction
Sigma	Controls the impact on noise reduction that is caused by the pixels near the current pixel. When the distance between the surrounding pixels and the current pixel is the same, a greater parameter value indicates less impact on noise reduction that is caused by the surrounding pixels, and vice versa.
Noise Threshold	Distinguishes between noises and details. When the contrast between a pixel in a detailed layer graph and another pixel in the surrounding area is less than the noise criterion value, the pixel in the surrounding area has great impact on the noise reduction of the current pixel. Otherwise, the pixel in the surrounding area has minor impact on the noise reduction of the current pixel. In this case, the details between the two pixels are retained.
Fine Grain	Suppresses fine-grained noises. Noise suppression reaches the maximum level when the parameter value is 0, and reaches the minimum level (noise is not suppressed) when the parameter value is 1.0. When the parameter value changes gradually from 0 to 1, the level of noise suppression decreases.
Middle-sized Grain	Suppresses medium-grained noises. Noise suppression reaches the maximum level when the parameter value is 0, and reaches the minimum level (noise is not suppressed) when the parameter value is 1.0. When the parameter value changes gradually from 0 to 1, the level of noise suppression decreases.
Large-sized Grain	Suppresses coarse-grained noises. Noise suppression reaches the maximum level when the parameter value is 0, and reaches the minimum level (noise is not suppressed) when the parameter value is 1.0. When the parameter value changes gradually from 0 to 1, the level of noise suppression decreases.

Auto WL Ratio

The related parameters of the auto window factor can affect the result of the auto calculated window level. The auto window left scale factor adjustment will increase the left end position of the window, the auto window right scale factor adjustment will decrease the right end position of the window, and the auto window adjustment will increase the overall position of the window.

6.7 Image Stitching

The console software provides the image stitching function to stitch the images of body parts such as the spine and legs of the animal in different areas to form a complete single image.

6.7.1 Starting Stitching Management

Perform the following procedure:

1. Select the images to be stitched (the selected images are marked) on the “Exam” screen.
2. Select [Stitch] to start stitching management.

   The stitched image is automatically saved and displayed in the thumbnail area.

   The stitching position can be adjusted manually through image panning and stitching point selection.

   Select [EditStitch] to switch to the main screen of image stitching.

   The main screen of image stitching mainly consists of the following functional areas:

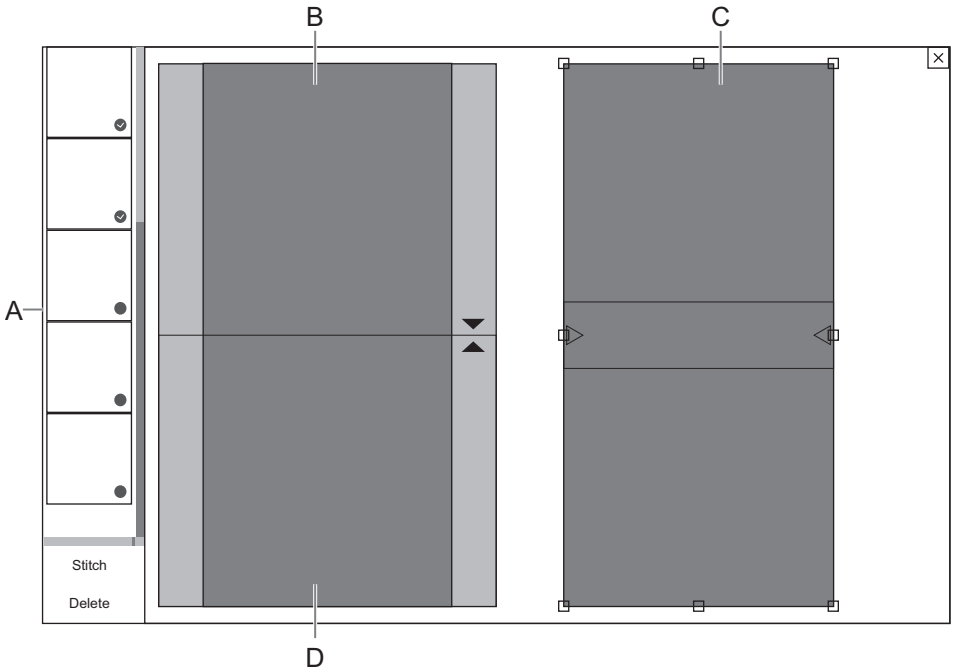

A	Thumbnail management area: displays the thumbnails of the stitched images.
B	Area 1 of image stitching: displays the upper image corresponding to the current stitching seam.
C	Stitching result display area: displays the overall stitching effect.
D	Area 2 of image stitching: displays the lower image corresponding to the current stitching seam.

You can perform, adjust, and confirm stitching using the following controls.

	Moves the selected image upward. If the selected image is on top, no operation is performed.
	Moves the selected image downward. If the selected image is at the bottom, no operation is performed.

Delete image	Deletes the selected image.
Pick Mark	Selects the stitching point between images in area B and area D.
Body thickness	Indicates the maximum distance between the front and rear surface of the body.
Distance	Indicates the distance between the center of the body and the surface of the FPD.
Fusion degree	Indicates the degree of simultaneous display of two neighboring images in the overlap area.
Restitch	If the automatic stitching results do not meet your expectation, you can select [Restitch] to enter the manual stitching state. You can also discard the manual stitching results and restore to the initial state of automatic stitching.
Save	Accepts the current stitching results, saves the stitched image, and saves the image to the database.

Image Panning

Image panning is the process of manually moving two images to be stitched relative to each other to adjust the stitching position.

Perform the following procedure:

1. Observe the stitching rendering in area C to identify the area to be adjusted.

   You can also observe the thumbnails in area A to determine the approximate position of the stitching seam. Areas B and D display the upper and lower images corresponding to the selected stitching seam and the stitching relationship.

2. Click in the area D, a blue box is displayed.

3. Click and drag to pan the image in area D to adjust the stitching position of the images in area B and area D, and observe the adjustment effect in area C.

   Release the mouse after adjustment.

4. If you want to continue to adjust the stitching relationship between other neighboring images, repeat steps 1.~3.

5. After adjusting the stitching of all images, select [Save] to save the images.

Stitching Point Selection

Coincident point selection is the method of adjusting the stitching position by superposing the stitching points of two images.

Perform the following procedure:

1. Observe the stitching rendering in area C to identify the area to be adjusted.

2. Click in the area D, a blue box is displayed.

3. Select [Pick Mark] on the main screen of image stitching.

4. Click the images in area B and area D to select the stitching points.

The selected stitching points are marked by a red cross.

5. Select [Restitch].

   The system combines the images in area B and area D by superposing the stitching points. You can observe the adjustment effect in area C. If the stitching effect does not meet your expectation, select [Pick Mark] to reselect stitching points.

6. If you want to continue to adjust the stitching relationship between other neighboring images, repeat steps 1.~5.

7. After adjusting the stitching of all images, select [Save] to save the images

6.8 Image Confirmation

The images generated during exposure are automatically saved.

After images are tagged or postprocessed (adjusted), select [Save] to save the images. Select [Save As] to save an image as a new image. The originally saved image remains unchanged.

NOTE:

Select [Cancel] to return to the status when the image is saved.

7 Animal Data Management

An exam record consists of all information and data of one exam. An exam record consists of the following information:

- Animal basic information and exam data
- Image files
- Report

The “History” screen provides the following functions:

- Query and display animal information
- Edit animal information
- Delete animal information
- Send and print animal images
- Back up and restore animal data

NOTE:

- DO NOT use the internal hard drive for long-term image storage. Daily backup is recommended. External storage media is recommended for archiving images.
- The system animal database space is limited, please back up or clear animal data in time.
- Selecting the compressed format to export the image may cause image distortion.
- The manufacturer is not responsible for lost data if you DO NOT follow suggested backup procedures.

7.1 Searching an Animal

Perform the following procedure:

1. Select the data source.

Select [Data Source] to select the data source of animal data, the system animal database is default.

2. Set search conditions in the “Filter” drop-down list.

3. Enter the key word. The matching animal information is displayed in the animal list.

When you select an animal exam in the animal list, the images of this animal will be displayed at the bottom of the screen.

7.2 Animal Data View and Management

NOTE:

Only administrators or authorized operators are allowed to delete data.

Select the desired animal information in the list.

Item	Description
Backup	Backup the selected animal data to the system-supported media. You can backup the animal data to DCM files by selecting “Copy Origin Dcm File”. You can also set whether to remove the animal data from local hard disk after Backup.
Restore	Import the animal data from an external media.
Lock	Lock the selected animal exam. The locked animal examination cannot be deleted.
Edit	View the details of the animal and modify the animal information.
Delete	To delete an exam: select the desired exam and select [Delete] below the animal information list area.
Delete Image	To delete an image: **1.** Select an animal exam. The image(s) acquired by the exam is displayed in the thumbnail area. **2.** Select [DeleteImage] on the right of the thumbnail area, and select the image(s) to be deleted. **3.** Select [OK].

7.3 Image Compare

On the Exam screen, select [Diag Ref].

The title bar of the left image displays the current animal ID, animal name, and animal type.

Common processing tools are provided for performing image display operations. The following figure shows the corresponding icons.

Icon	Name	Description
	Restore images	Load the original image.
	Invert	Flips an image between positive and negative display.
	Gray Window/ Roam	Switch between the window width/position adjustment and the image roaming.

Icon	Name	Description
	Paging	Select or to turn to the previous or next page to view the films on each page. The page number is displayed between the paging buttons. The first digit indicates the current page number, and the second digit indicates the total pages.

History Image

- Select (Review) tab. The history image library of the previous exam with the same animal ID is loaded by default. The first image with the same position on the left is displayed. The right title bar displays the currently referenced animal ID, animal name, and animal type.
- Select (Review) again to display all thumbnails of the current exam. Select a thumbnail to load the image to the right image display area.
- A search bar is provided on the right side of the title bar. The search method equals to fuzzy search when “All” is selected in the history image. The search result is an exam that meets the requirement. Select an exam to load the image of the exam.

Standard Image

Select (Standard) tab, and the standard film of the left image is displayed by default. The right title bar displays the position of the current standard slide.

Select (Standard) tab again to display the thumbnails of all optional standard sheets. Select a thumbnail to load the image to the right image display area.

Pathological Image

Select (Case) tab. The image on the left of the tab is loaded by default, and the first one on the right of the tab is displayed in the image display area. The right title bar displays the symptoms corresponding to the current pathological slice.

Select (Case) again to display the thumbnails of all the images. Select a thumbnail to load the image to the right image display area.

Application Measurement

Select (Measured), and the first application measurement image is displayed by default. The title bar on the right side displays the name of the application measurement.

Select (Measured) again to expand the thumbnails of all application measurements. Select a thumbnail to load the image to the right image display area.

7.4 Sending Animal data

Perform the following procedure:

1. Select one or more animal exams from the animal information list.
2. Select from the destination, and set related settings.

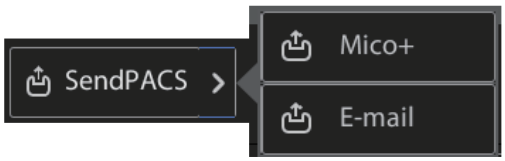

7.5 u-Link (applicable for CE region only)

u-Link is used to connect the system with software applications which support the u-Link protocol.

7.6 Recycle Bin

The recycle bin is used to store deleted animal data, exam data and images.

The system supports recovery of these data from the recycle bin.

Select [Recycle Bin] to enter the “Recycle Bin” screen.

Select items to be recovered in the list.

- [Restore]: to restore the selected item back to history exam.
- [Delete]: to delete the item permanently, and the item can never be restored again.

7.7 Image Print

On the history exam screen, select the desired exam to be printer, and select [Print] to enter the image print management screen.

The print management function allows you to arrange the layout of and adjust the received images.

7.7.1 Thumbnail Area Operations

Adding an Image to a Film

Do one of the following to add an image:

- Select a thumbnail to add the image to the first empty film cell. When no empty film exists, an empty film is automatically created and the image is added to the film.
- Select a thumbnail, and drag and drop it to the target film cell. Then, the image is added to the cell.

Scrolling to Display Thumbnails

When thumbnails are displayed on more than one page, you can drag the thumbnail area for position adjustment. You can also select the up and down arrows for position adjustment.

Clearing Thumbnails

Select [Clear] to clear the image(s) in the thumbnail area.

7.7.2 Image Adjustment

You can adjust the image in the image preview area before printing. The adjustment functions are the same as those on the image browsing screen, including:

Icon	Name	Description
	Image roaming	In the image display area, click and drag to pan the image.
	Rotation	Rotate the image at any angle.
	Image dragging	After selecting this button, click in the image preview area to exchange images between different cells and films by dragging and dropping.
Default	Default	Restores an image to the state prior to adjustment.
	Animal information display	Displays animal details on an image, including the basic animal information and exposure parameters.
	Positive/Negative image	Flips an image between positive and negative display.
	90º left rotation	Rotates left by 90º.
	90º right rotation	Rotates right by 90º.
	Up and down mirroring	Reverses image display up and down.
	Left and right mirroring	Reverses image display left and right.

7.7.3 Print Typesetting

The following table lists the functions and operations of typesetting tools:

Icon	Name	Description
	Print format	Select different icons to select different print formats. When you switch a print format, the left-side page is adjusted accordingly. The following figure shows the examples of various print formats.
14*17	Film size	You can select the desired film size. When the current film size is changed, the image added to the film changes its zooming status.
	Film orientation	Select different icons to select film print orientations. After a film print orientation is selected, the layout of the left-side page is rearranged accordingly. When the current orientation is changed, the image added to the film changes its zooming status.

Icon	Name	Description
	Multi-film preview	Select the film preview window format.
/	New Film	Select to add a new and empty film to the image preview area on the left as the last page. By default, the new film adopts the currently selected format.
/	Del Img	In the film preview window, select a film cell of the image to be deleted. ***NOTE:*** Select the icon on top right of the film grid to delete the image in the current film cell.
/	Del Film	Select to delete the current film. The total number of film pages reduces by 1. When the film preview window displays only one film, the displayed film is the current film. When the film preview window displays multiple films, the current film is highlighted.
/	Del All	Select to delete all films. Then, the total number of film pages becomes 0.
/	Paging	When films are displayed on multiple pages of the printing screen, select or to turn to the previous or next page to view the films on each page. The page number is displayed between the paging buttons. The first digit indicates the current page number, and the second digit indicates the total pages.

7.7.4 Setting the Print Parameter

Setting a Print Node

By default, the Print Server List drop-down list displays the default node in the *Setup* chapter.

When no default node is configured, the first node is displayed by default.

When multiple nodes are configured, select one from the drop-down list.

Setting the Number of Printed Copies

- Select [+] to increase the number of printed copies.
- Select [–] to reduce the number of printed copies. The number of copies is displayed in the middle.

Setting Image Fit Format

- Adaptive printing

  When you create a film on the film management screen, [Auto Fit] is selected by default. Adaptive printing indicates that the added image fills the film entirely.

  The image automatically adapts itself to the film cell size to fill the cell entirely when you change the film size, film orientation, and film typesetting, or rotate and flip the image on the film.
- Equal-proportion printing

Equal-proportion printing indicates that an image is printed to a film in a specific proportion of the actual image size. For example, if the 1.0 proportion is selected, the image printed to the film is of the actual size. Select [Actual Size], and select an option from the proportionality factor drop-down list.

- Apply to all

  Switching between adaptive printing and equal-proportion printing applies only to the current film. After you select [Apply to All], adaptive printing or equal-proportion printing selected for the current film is applied to all the other films.

7.7.5 Print

Printing the Current Film

Select [Print Current] to print the current film to the selected printer node.

Printing All Films

Perform the following procedure:

1. Select [Print All] to print all films to the selected printer node.

   You are prompted for operation confirmation before actual printing.

2. Select [OK] to start printing; select [Cancel] to cancel the printing.

7.8 Animal Task Management

Select in the system status icon area of the screen to bring up the task management screen.

You can perform the following operations:

- Select [Delete] to delete the task.
- Select [Retry] to retry the failed task.

7.9 DICOM Task Management

Select in the system status icon area of the screen to bring up the DICOM task management screen.

Perform the following procedure:

1. Select task type: Storage, Print and All.
2. Set search conditions:
   - Select task status.
   - Select the time range.
3. Select [Query] to view the tasks.
4. Perform the following operations:

– Select [Delete] to delete the selected task.
– Select [Redo] to retry the failed task.

8 Report Management

Select [Report] in the Exam process icons area to enter the report management screen.

8.1 Select a Report

Perform the following procedure:

1. On the Report management screen, select (Report list button) to expand the history report list:
   - "No report" tab: check the list of unsaved reports.
   - "Reported" tab: check the list of saved reports.
2. Search a report:

   Select the query conditions and input the query keyword in the text box to fuzzy search for the animals meeting the conditions.

   Select to restore the default query conditions and view the animals that are examined on the current day.
3. In the queried report list, select the report to be edited to enter the report editing screen.
4. Select (Report list button) to close the history report list.

8.2 Edit a Report

NOTE:

To edit animal information, select [Edit] button on the "History" screen.

8.2.1 Adding Images

When an animal exam report is selected, the image of the animal exam is automatically loaded in the image thumbnail area. Select the image thumbnail to preview the image.

Add images to the report in any of the following ways:

- Click to add the image to the report. The selected image displays "√".

If you need to add different images in the report diagnosis area, select the images in the thumbnail area in turn.

- In the “Diagnostic image” box, right-click and select [Add] to add the image in the thumbnail area to the box area. The thumbnail selection box of the added image is displayed as “√”.

Right-click the image in the “Diagnostic image” box, and the menu pops up:

- Select [Move to the left] or [Move to the right] to adjust the image order.
- Select [Delete] to delete the added images from the report.

8.2.2 Adding Diagnosis Description

Adding from the Library

Perform the following procedure:

1. Select to expand the knowledge base in the library area of the report management screen.
2. Expand the nodes at all levels and double-click to add the image presentation and impression to the report body directly.

   Double-click other nodes in the knowledge base. Add a new node to the text area of the report.

   To replace the content of the report body with the content of the knowledge base, right-click the knowledge base screen and select [Replace report] to replace the content of the report body with the content of the knowledge base.

Adding from the Report Body

Perform the following procedure:

1. Select the “Image presentation” or “Impression” area in the body of the report to locate the cursor.
2. Use the keyboard to edit and enter the description of the condition.

   Right-click the mouse and a context menu pops up. Common context menus and shortcuts such as [Select All] and [Copy] are supported.

8.2.3 Setting Positive/Negative

In the lower part of the text area, you can directly define the case as positive or negative. The default value is “Unknown”. By selecting the drop-down arrow button and selecting the corresponding value, the value will be saved when the report is saved.

8.3 Save a Report

When the report is finished and the current content needs to be saved, select [Save] in the operation area to save the current report text and the positive/negative status. The [Save] button turns gray.

The [Save] button is activated when the report is edited or the positive/negative result is switched.

8.4 Preview a Report

Select [Preview] in the operating area to display the review screen of the generated report.

8.5 Print a Report

Select [Print] to print the report, or select [Preview] > [Print] to print the report.

A confirmation dialog box of printing report pops up. Select [Yes] to print the report to the connected printer.

After the report is printed, is marked on the upper-right corner of the report.

8.6 Deleting a Report

Perform the following procedure:

1. On the report management screen, select (Report list button) to expand the history report list:
   - "No reported" tab: check the list of unsaved reports.
   - "Reported" tab: check the list of saved reports.
2. Search a report:

   Select the query conditions and input the query keyword in the text box to fuzzy search for the animals meeting the conditions.

   Select to restore the default query conditions and view the animals that are examined on the current day.
3. In the queried report list, select the report to be deleted and select .

8.7 Knowledge Base Management

TIP:

Administrators can edit the public knowledge base template, while common users can only edit the template under the individual account.

Select to expand the knowledge base in the library area of the report management screen.

The factory default value has a public knowledge base node. Users can add or modify the content of the knowledge base.

The template of the knowledge base is a tree structure, which can be divided into public template directory and personal template directory.

Select an item in the template, and the "Image Presentation" and "Impression" will be displayed in the content display area.

Double-click the template directory node to show or hide the directory.

You are allowed to import or export the knowledge base. For details, see the *Report Configurations* section in the *Setup* chapter.

8.7.1 Adding a Knowledge Base

Perform the following procedure:

1. Right-click the main node and select [Add a knowledge base directory] from the context menu.
2. Add database directory node:
   a. Select a node as required, and then right-click the node to display the shortcut menu.
   b. Select [Add a knowledge base directory] from the shortcut menu, and add a sub-knowledge base catalog node under this node.
   c. Select the new knowledge base directory node, and then select [Edit] to edit the name in the Name text box.
3. Add knowledge base template:
   a. Select a node and right-click to display the shortcut menu.
   b. Select [Add a knowledge base template] from the shortcut menu.
   c. Select [Edit] to edit in the “Name”, “Image Presentation” and “Impression” text boxes.

8.7.2 Modifying a Template

Perform the following procedure:

1. Double-click the template directory node to expand the knowledge base entry.
2. Choose a template node to edit, and then select [Edit].

   The template name and content are editable, and the cursor is automatically located at the template name.
3. Edit contents in the corresponding text box.

   After editing:
   – [Save]: To overwrite the modified settings.
   – [Save as]: Save the modified template as a knowledge base. The original template remains unchanged. Save the saved template in the same directory.
   – [Cancel]: Cancel the modification.

8.7.3 Saving Report Contents to a Template

Perform the following procedure:

1. Double-click the template directory node to expand the knowledge base entry.
2. Select the knowledge base template in the knowledge base directory node.

3. In the report editing area, right-click in the “Image presentation” or “Impression” area to display the shortcut menu.
4. Select [Save to the knowledge base] to replace the “Image Presentation’ and “Impression” in the selected knowledge base template.
5. Select [Save] to save the replacement.

8.7.4 Adjusting Contents

Perform the following procedure:

1. Double-click the template directory node to expand the knowledge base entry.
2. Select the knowledge base template in the knowledge base directory node.
3. Select a node and right-click to display the shortcut menu.
   - Select [Move up] or [Move down] to adjust the order of the directory nodes or templates.
   - Select [Delete] to delete the directory node or template.

9 System Maintenance

⚠ CAUTION

Failure to perform periodic inspection and maintenance may cause the working conditions to deteriorate without the user's knowledge and thus result in equipment faults, damage, and even injury.

A periodic maintenance and repair program must be established to ensure continuous safe performance of the system. It is the user's responsibility to check the equipment status and perform preventive inspection of the system.

There are two levels of maintenance. One level is maintenance by the user or operator, and the other level is maintenance by professional X-ray maintenance personnel.

9.1 Operator's Tasks

⚠ WARNING

- **After the system starts, do not perform cleaning or maintenance of any component of the equipment. Be sure to shut down the system and disconnect the main power supply before cleaning or maintenance. Disconnect the cables between all the operated components and the system during cleaning, maintenance, and inspection.**
- **Ensure that no water or other liquids enter the system, to avoid electrical system short circuit or component corrosion.**
- **Because some substances of cleaning agents are harmful to the human body, the concentration of such substances in air cannot exceed the upper limit specified by relevant rules and regulations. Strictly observe the use instructions provided by the manufacturers of such cleaning agents.**
- **After cleaning and disinfection, fully ventilate the room and then power on the device. Residual flammable gases in the room may cause fire and explosion when the system is powered on.**
- **Do not use any other cleaning agents or solvents because they may darken the painting or smudge printed text.**
- **Do not directly clean the surface of the equipment with a cleaning spray, because the spray mist may seep into the equipment, damage electronic components, and form a combustible mixture of air and water vapors, posing a safety hazard.**

- **Do not remove any shelf cover. Do not remove or handle the internal components of the equipment. THESE ACTIONS COULD CAUSE SERIOUS BODILY INJURY AND/OR SYSTEM DAMAGE.**

Perform the following procedure:

1. Power off the system and cut off the power supply to the equipment.
2. Check whether the cables between the main components of the system are connected properly.
3. Clean regularly.

   You are advised to clean the device and all contaminated parts twice per day, and the duration of cleaning the same part each time does not exceed 3 minutes, especially for the parts in contact with animals, including the flat panel detector, detector tray of the radiography stand, and handrail. Soak a soft cloth in ethanol (75%) or isopropanol (70%) solution. Then use it to clean the enclosure and surface of the device. After cleaning, use a soft cotton cloth to dry the display/touch screen immediately, and wipe off the contrast agent stains (if any) as soon as possible.

9.2 Service Tasks

NOTE:

- Perform FPD calibration and maintenance periodically to keep the performance at a constant level. Refer to the *Setup* chapter of this manual for operation instructions of detector calibration.
- If you find abnormal sound, operation failure, equipment damage, uncontrolled patient support movement, or uncontrolled X-ray operation during use, please contact the Customer Service Department or your local distributor.

Only service engineers trained on medical X-ray equipment can perform maintenance and repair of this system. The equipment manufacturer recommends that initial system maintenance be performed after one month and before the third month following system installation and operation. In normal cases, maintenance should be performed every 12 months based on the system operation status.

If many animals are examined every day (for example, 125 animals per day) after system installation, the maintenance cycle should be shortened. For example, perform full maintenance every 6 months.

10 System Specifications

10.1 Operating Environment

- CPU: Intel Core 2/3.0GHz or above
- RAM: ≥4GB
- Hard Disk: ≥500GB (The partition should contain disk D)
- Software Environment
  - Windows 10 64bit (Enterprise LTSC)
  - Windows 11 64bit (Home, Professional, Enterprise, Education)
- Monitor Resolution:1920×1080; Zoom Factor: 100%
- Network Condition: Gigabit Ethernet

10.2 Technical Specifications

10.2.1 Environmental Conditions

Item		Value
Operating conditions	Relative humidity	30% to 75%
	Atmospheric pressure	70 kPa to 106 kPa
	Ambient temperature	10℃ to 35℃
Storage and transportation conditions	Relative humidity	20% to 90%
	Atmospheric pressure	70 kPa to 106 kPa
	Ambient temperature	-20℃ to 55℃

10.2.2 Power supply

Item		Value
Power supply box	Voltage	AC single-phase, 100-240V
	Frequency	50/60Hz±1Hz
	Input power	60 VA

10.2.3 Flat panel detector (AME4343R1)

Item	Value
Input voltage	AC single-phase 100-240V
Power frequency	50/60Hz±1Hz
Scintillator fluorescent material	CsI
Detection unit array material	a-Si
Valid FPD dimensions	43 cm x 43 cm
Collection matrix	3072 x 3072 pixels
Pixel size	140 µm
A/D conversion (number of valid data bits)	16 bits
MTF(2lp/mm)	30%
DQE(0lp/mm)	60%
Spatial resolution	3.5 LP/mm
Imaging time	5s
Weight	4 kg (deviation ≤ +15%)
Power Supply Box cable length	6m
Dimensions	460 mm x460 mm x 15.5 mm
kV range	40 kVp to 150 kVp
Protection class	IPX1
Weight-bearing	150 kg on the surface of the whole plate and 100 kg within a diameter of 40 mm from the center
AED	Supported

11 Guidance and Manufacturer's Declaration

11.1 EMC

The system complies with the EMC standard IEC 60601-1-2:2014 as well as Safety restrictions on electromagnetic radiation exposure from CE.

Intended Environments: professional healthcare facility environment (except for near active HF SURGICAL EQUIPMENT and the RF shielded room of an ME SYSTEM for magnetic resonance imaging).

⚠ WARNING

- **The use of unapproved accessories may diminish system performance.**
- **Use of this equipment adjacent to or stacked with other equipment should be avoided because it could result in improper operation. If such use is necessary, this equipment and the other equipment should be observed to verify that they are operating normally.**
- **3. Use of accessories, transducers and cables other than those specified or provided by the manufacturer of this equipment could result in increased electromagnetic emissions exposure beyond intended use or decreased electromagnetic immunity of this equipment and result in improper operation.**
- **4. Portable RF communications equipment (including peripherals such as antenna cables and external antennas) should be used no closer than 30 cm (12 inches) to any part of the system, including cables specified by the manufacturer. Otherwise, degradation of the performance of this equipment could result.**
- **5. Use of portable or mobile communications devices can degrade the performance of the equipment.**
- **6. The system is not intended for use in residential environments and can possibly not provide adequate protection to radio reception in such environments.**
- **7. Use the system away from heat penetration, diathermy, electrocautery, magnetic resonance imaging, RFID and security equipment (such as electromagnetic anti-theft system and metal detector). If some concealed RF transmitters that are not known to the user are exposed near the device and are disturbed by the device (for example, scanning mode changes or image disturbances affecting diagnosis), the user should immediately take mitigation measures, such as redirecting, repositioning or shielding away from the RF transmitter.**

NOTE:

- The EMISSIONS characteristics of this equipment make it suitable for use in industrial areas and hospitals (CISPR 11 class A). If it is used in a residential environment (for which CISPR 11 class B is normally required) this equipment might not offer adequate protection to radio-frequency communication services. The user might need to take mitigation measures, such as relocating or re-orienting the equipment.
- recommendations for actions that are known to affect the EMISSIONS and IMMUNITY of equipment throughout the EXPECTED SERVICE LIFE:
  - recommendations for maintenance or service intervals;
  - service procedures to maintain effectiveness of shields and grounds;
  - precautions to take if the use location is near (e.g. less than 1,5 km from) AM, FM or TV broadcast antennas.
- The system needs special precautions regarding EMC and needs to be installed and put into service according to the EMC information provided below.
- Operation of system, in the case that the patient physiological signal is lower than the minimum amplitude or value specified in the product specifications, may cause inaccurate results.
- Portable and mobile RF communications equipment can affects system. See tables 2, 3, and 4 below.

If the system is operated within the electromagnetic environment listed in Table 2, Table 3, Table 4 and Table 5, the system will remain safe and will provide the following basic performances:

- Imaging;
- Wireless communication
- Date information

Table 11-1

GUIDANCE AND MINDRAY ANIMAL MEDICAL DECLARATION-ELECTROMAGNETIC EMISSIONS		
The system is intended for use in the electromagnetic environment specified below. The customer of the user of the system should assure that it is used in such an environment.		
EMISSIONS TEST	**COMPLIANCE**	**ELECTROMAGNETIC ENVIROMENT-GUIDANCE**
RF emissions CISPR 11	Group1	The system uses RF energy only for its internal function. Therefore, its RF emissions are very low and are not likely to cause any interference in nearby electronic equipment.

Table 11-1

GUIDANCE AND MINDRAY ANIMAL MEDICAL DECLARATION-ELECTROMAGNETIC EMISSIONS		
The system is intended for use in the electromagnetic environment specified below. The customer of the user of the system should assure that it is used in such an environment.		
EMISSIONS TEST	**COMPLIANCE**	**ELECTROMAGNETIC ENVIROMENT-GUIDANCE**
RF emissions CISPR 11	Class A	The system is suitable for use in all establishments other than domestic and those directly connected to the public low-voltage power supply network that supplies buildings used for domestic purposes.
Harmonic Emissions IEC 61000-3-2	Not applicable	
Voltage Fluctuations / Flicker Emissions IEC 61000-3-3	Not applicable	

Table 11-2

GUIDANCE AND MINDRAY ANIMAL MEDICAL DECLARATION-ELECTROMAGNETIC IMMUNITY			
The system is intended for use in the electromagnetic environment specified below. The customer or the user of the system should assure that it is used in such an environment.			
IMMUNITY TEST	**IEC 60601 TEST LEVEL**	**COMPLIANCE LEVEL**	**ELECTROMAGNETIC ENVIRONMENT-GUIDANCE**
Electrostatic Discharge(ESD) IEC 61000-4-2	±8 kV contact; ±2kV, ±4kV, ±8kV, ±15 kV air	±8 kV contact; ±2kV, ±4kV, ±8kV, ±15kV air	Floors should be wood, concrete or ceramic tile. If floors are covered with synthetic material, the relative humidity should be at least 30%.
Electrical fast Transient / burst IEC 61000-4-4	±2 kV for power supply lines; ±1 kV for input / output lines	±2 kV for power supply lines; ±1 kV for input / output lines	The power supply quality should be that of a typical commercial or hospital environment.
Surge IEC 61000-4-5	±1 kV line (s) to line (s); ±2 kV line (s) to earth	±1 kV line (s) to line (s); ±2 kV line (s) to earth	The power supply quality should be that of a typical commercial or hospital environment.

Table 11-2

GUIDANCE AND MINDRAY ANIMAL MEDICAL DECLARATION-ELECTROMAGNETIC IMMUNITY			
The system is intended for use in the electromagnetic environment specified below. The customer or the user of the system should assure that it is used in such an environment.			
IMMUNITY TEST	**IEC 60601 TEST LEVEL**	**COMPLIANCE LEVEL**	**ELECTROMAGNETIC ENVIRONMENT-GUIDANCE**
Voltage dips, Short interruptions and voltage variation on power supply input voltage IEC 61000-4-11	0% U_T; 0,5 cycle At 0°, 45°, 90°, 135°, 180°, 225°, 270° and 315° 0% U_T; 1 cycle 70% U_T for 25/30 cycle at 0° 0% U_T; 250/300 cycle	0% U_T; 0,5 cycle At 0°, 45°, 90°, 135°, 180°, 225°, 270° and 315° 0% U_T; 1 cycle 70% U_T for 25/30 cycle at 0° 0% U_T; 250/300 cycle	Mains power quality should be that of a typical commercial or hospital environment. If the user of the system requires continued operation during power mains interruptions, it is recommended that the system be powered from an uninterruptible power supply or a battery.
Power frequency (50/60 HZ) magnetic field IEC 61000-4-8	30 A/m	30 A/m	Power frequency magnetic fields should be at levels characteristic of a typical location in a typical commercial or hospital environment.
NOTE: U_T is the A.C. power voltage prior to application of the test level.			

Table 11-3

GUIDANCE AND MINDRAY ANIMAL MEDICAL DECLARATION— ELECTROMAGNETIC IMMUNITY			
The system is intended for use in the electromagnetic environment specified below. The customer or the user of the system should assure that it is used in such an environment.			
IMMUNITY TEST	**IEC 60601-1-2 TEST LEVEL**	**COMPLIANCELEVEL**	**ELECTROMAGNETIC ENVIRONMENT-GUIDANCE**
Conduced RF IEC 61000-4-6	3 Vrms 0,15 MHz - 80 MHz 6 Vrms in ISM bands between 0,15 MHz and 80 MHz	3 Vrms 0,15 MHz - 80 MHz 6 Vrms in ISM bands between 0,15 MHz and 80 MHz	Portable and mobile RF communications equipment should be used no closer to any part of the system, including cables, than the recommended separation distance calculated from the equation applicable to the frequency of the transmitter. Recommended separation distance $d = 1.2 \times \sqrt{P}$
Radiated RF IEC 61000-4-3	3 V/m 80MHz - 2.7GHz	3 V/m 80MHz - 2.7GHz	$d = 1.2 \times \sqrt{P}$ 80 MHz to 800 MHz $d = 2.3 \times \sqrt{P}$ 800 MHz to 2.7GHz where P is the maximum output power rating of the transmitter in watts (W) according to the transmitter manufacturer and d is the recommended separation distance in meters (m). Field strengths from fixed RF transmitters, as determined by an electromagnetic site survey, should be less than the compliance level in each frequency range. Interference may occur in the vicinity of equipment marked with the following symbol:

Table 11-3

GUIDANCE AND MINDRAY ANIMAL MEDICAL DECLARATION—ELECTROMAGNETIC IMMUNITY			
The system is intended for use in the electromagnetic environment specified below. The customer or the user of the system should assure that it is used in such an environment.			
IMMUNITY TEST	**IEC 60601-1-2 TEST LEVEL**	**COMPLIANCELEVEL**	**ELECTROMAGNETIC ENVIRONMENT-GUIDANCE**

Note 1: At 80 MHz and 800 MHz, the higher frequency range applies.

Note 2: These guidelines may not apply in all situations. Electromagnetic propagation is affected by absorption and reflection from structures, objects and people.

- The ISM (industrial, scientific, and medical) bands between 150 kHz and 80 MHz are 6,765 MHz to 6,795 MHz; 13,553 MHz to 13,567 MHz; 26,957 MHz to 27,283 MHz; and 40,66 MHz to 40,70 MHz. The amateur radio bands between 0,15 MHz and 80 MHz are 1,8 MHz to 2,0 MHz, 3,5 MHz to 4,0 MHz, 5,3 MHz to 5,4 MHz, 7 MHz to 7,3 MHz, 10,1 MHz to 10,15 MHz, 14 MHz to 14,2 MHz, 18,07 MHz to 18,17 MHz, 21,0 MHz to 21,4 MHz, 24,89 MHz to 24,99 MHz, 28,0 MHz to 29,7 MHz and 50,0 MHz to 54,0 MHz.
- Field strengths from fixed transmitters, such as base stations for radio (cellular / cordless) telephones and land mobile radios, amateur radio, AM and FM radio broadcast and TV broadcast cannot be predicted theoretically with accuracy. To assess the electromagnetic environment due to fixed RF transmitters, an electromagnetic site survey should be considered. If the measured field strength in the location in which system is used exceeds the applicable RF compliance level above, system should be observed to verify normal operation. If abnormal performance is observed, additional measures may be necessary, such as reorienting or relocating system.
- Over the frequency ranges 150kHz to 80MHz, field strengths should be less than 3V/m.

Table 11-4

RECOMMENDED SEPARATION DISTANCES BETWEEN PORTABLE AND MOBILE RF COMMUNICATION DEVICE AND SYSTEM			
The system is intended for use in an electromagnetic environment in which radiated RF disturbances are controlled. The customer or the user of the system can help prevent electromagnetic interference by maintaining a minimum distance between portable and mobile RF communications equipment (transmitters) and the system as recommended below, according to the maximum output power of the communications equipment.			
Rated Maximum Output power of Transmitter (W)	**Separation Distance According to Frequency of Transmitter (m)**		
	150kHz -80MHz $d = 1.2\sqrt{P}$	**80MHz-800MHz** $d = 1.2\sqrt{P}$	**800MHz-2.7GHz** $d = 2.3\sqrt{P}$
0.01	0.12	0.12	0.23
0.1	0.38	0.38	0.73
1	1.2	1.2	2.3
10	3.8	3.8	7.3
100	12	12	23

Table 11-4

RECOMMENDED SEPARATION DISTANCES BETWEEN PORTABLE AND MOBILE RF COMMUNICATION DEVICE AND SYSTEM			
The system is intended for use in an electromagnetic environment in which radiated RF disturbances are controlled. The customer or the user of the system can help prevent electromagnetic interference by maintaining a minimum distance between portable and mobile RF communications equipment (transmitters) and the system as recommended below, according to the maximum output power of the communications equipment.			
Rated Maximum Output power of Transmitter (W)	**Separation Distance According to Frequency of Transmitter (m)**		
	150kHz -80MHz $d = 1.2\sqrt{P}$	**80MHz-800MHz** $d = 1.2\sqrt{P}$	**800MHz-2.7GHz** $d = 2.3\sqrt{P}$
For transmitters at a maximum output power not listed above, the recommended separation distanced in meters (m) can be determined using the equation applicable to the frequency of the transmitter, where P is the maximum output power rating of the transmitter in watts (W) according to the transmitter manufacturer. If system image distortion occurs, it may be necessary to position system further from sources of conducted RF noise or to install external power source filter to minimize RF noise to an acceptable level. Note 1 At 80 MHz and 800 MHz, the separation distance for the higher frequency range applies. Note 2 These guidelines may not apply in all situations. Electromagnetic propagation is affected by absorption and reflection from structures, objects and people.			

11.2 Cable Information

No.	Name	Cable Length (m)	Shielding	Remarks
1.	AC Power Cord	1.8	Yes	/
2.	Network cable	15	Yes	
3.	Power Supply Box cable	6	Yes	
4.	Power Adapter cable	1.2	Yes	/